INSTALLATION INSTRUCTIONS

DeerValley®

Sliding Shower Door

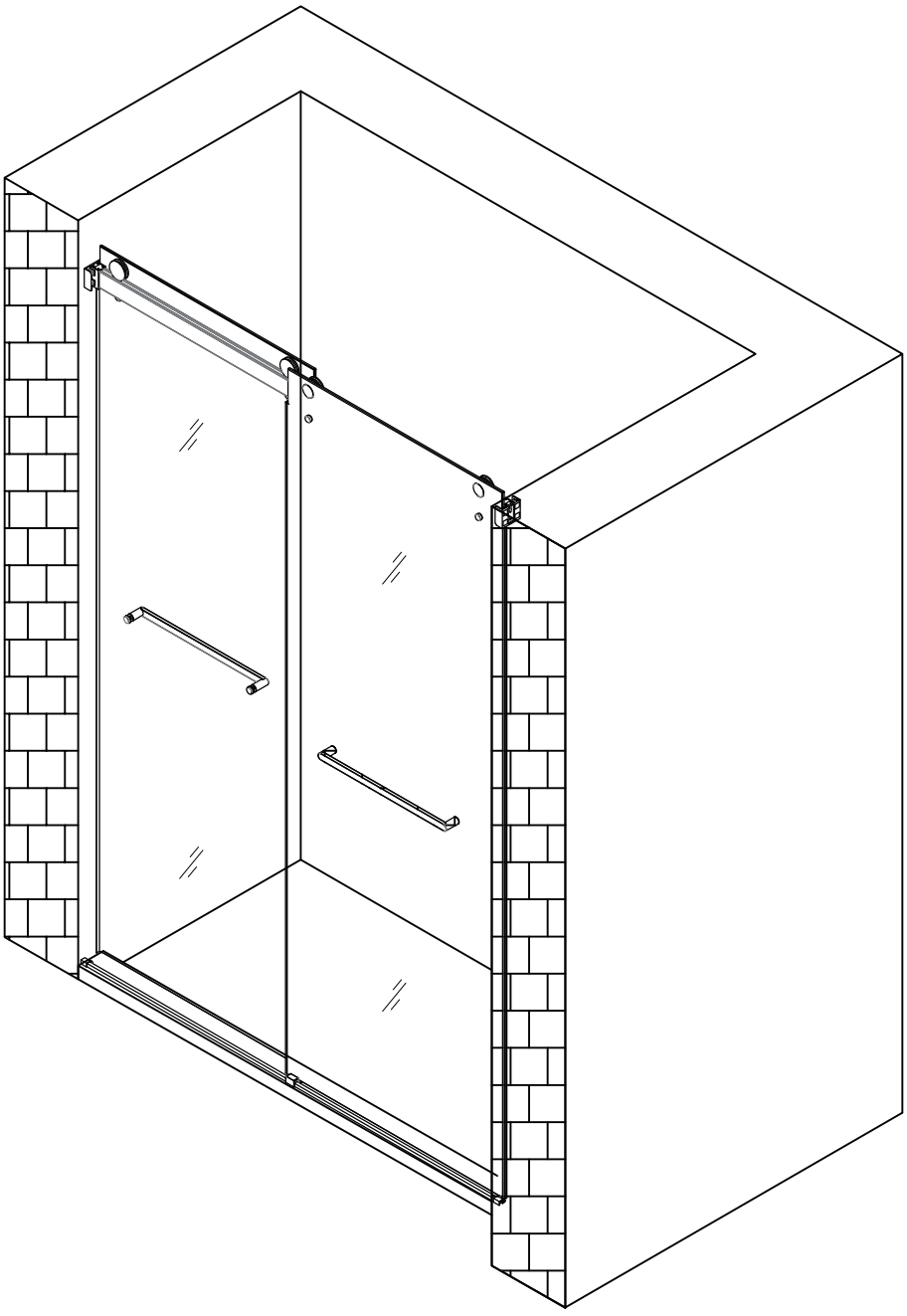

www.deervalleybath.com | (312) 626-9466 | service@deervalleybath.com

Product Breakdown Diagram

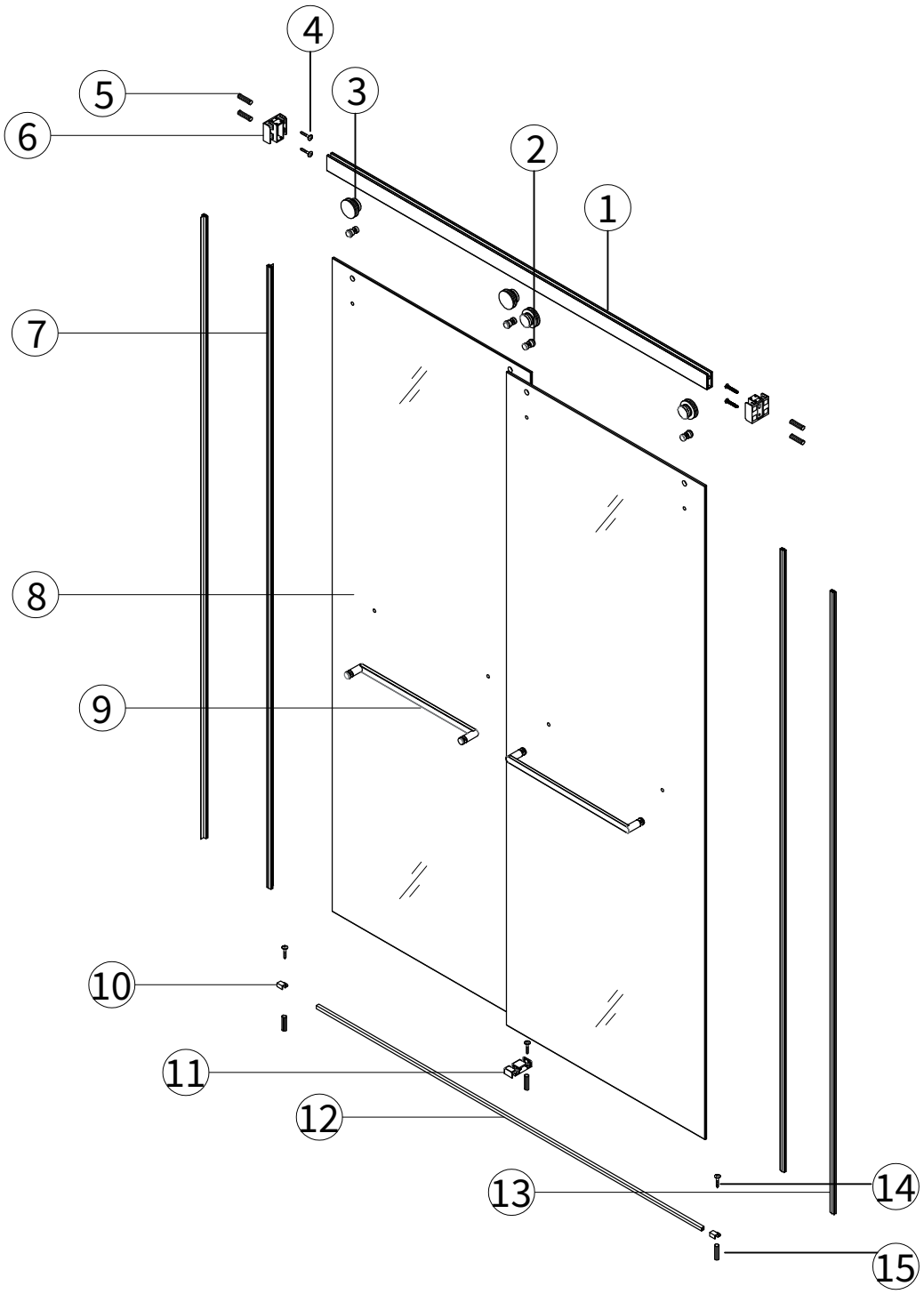

If you have any questions or concerns please contact us:

(312) 626-9466
service@deervalleybath.com

Delivery Notes

Upon receiving the product, please immediately inspect for any transportation damage, missing parts, or manufacturing defects.

Cleaning and Maintenance

1. For daily cleaning of the glass panel, you can use common liquid detergent and a soft cloth.
2. For stains, use a clean soft towel or a small amount of neutral soap solution or toothpaste to gently wipe.
3. To keep the glass surface shiny, you can use a polishing agent for polishing treatment.

Precautions

1. Do not use acidic, alkaline, or sharp tools during cleaning to avoid damaging the glossiness of shower trays, glass, metal materials, and other accessories' surfaces.
2. Avoid using strong detergents containing acetone or ammonia ingredients; when disinfecting, avoid using disinfectants containing formic acid and formaldehyde to prevent damage to the product's surface glossiness.
3. Do not allow body or hard objects to come into contact with or impact the glass surface during showering to avoid accidents.
4. Regularly check the usage condition of the product, and if any abnormalities are found, please contact the after-sales service department promptly.

Tool List (Not Included)

Material Name	Illustration	Material Name	Illustration
Spirit Level	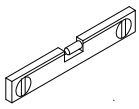	Power Drill	
Ø6 Drill Bit	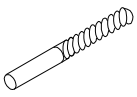	Ø8 Drill Bit	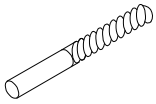
Silicone Sealant		Rubber Hammer	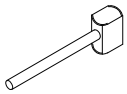
Tape Measure	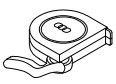	Screwdriver	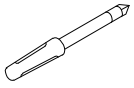
Pencil	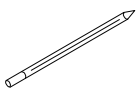	Hanging Hammer	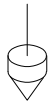

Drawings may not exactly define contour of the product.

(312) 626-9466
www.deervalleybath.com

Package Content

1 X1

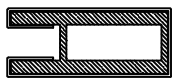

Track

2 X4

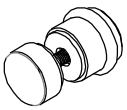

Anti jump wheel

3 X4

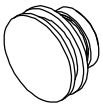

Pulley

4 X4

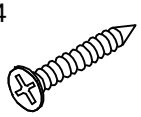

ST5*40

5 X4

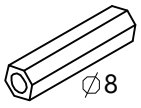

Expansion tube

6 X2

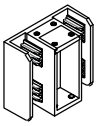

Pipe sleeve

7 X2

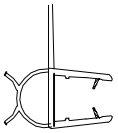

Water Blocking - A

8 X2

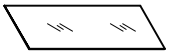

Movable glass

9 X2



Handle

10 X2

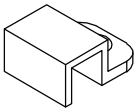

Water blocking plug

11 X1

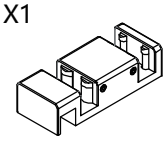

Lower slider

12 X1

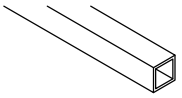

Water Blocking - Bottom

13 X2

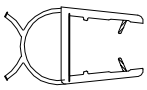

Water Blocking - B

14 X4

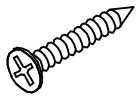

ST4*20

15 X4

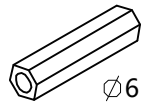

Expansion tube

Drawings may not exactly define contour of the product.

(312) 626-9466
www.deervalleybath.com

Installation Steps

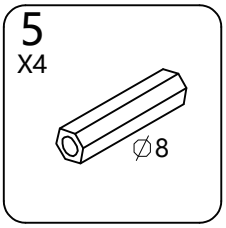

Expansion tube

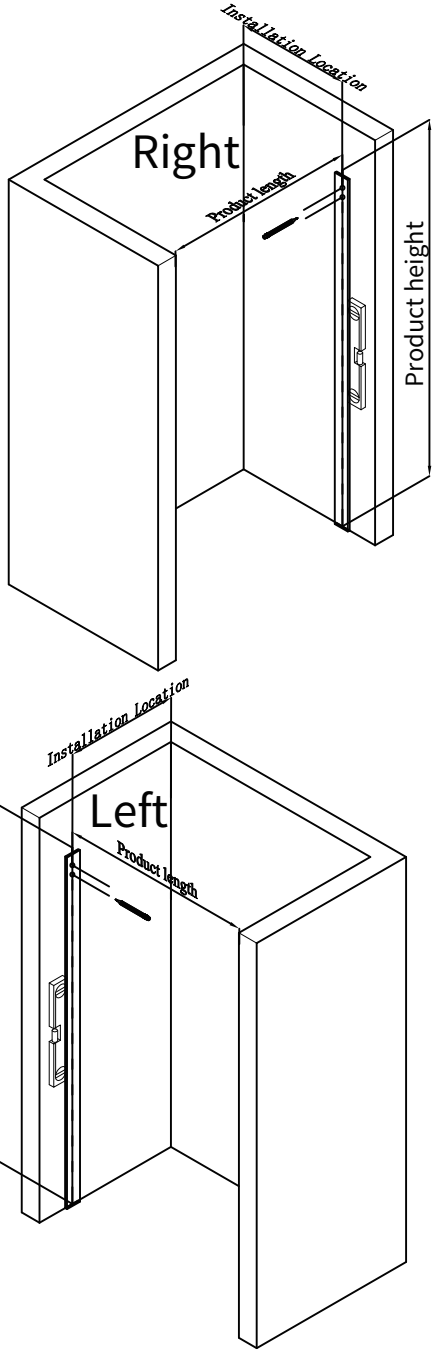

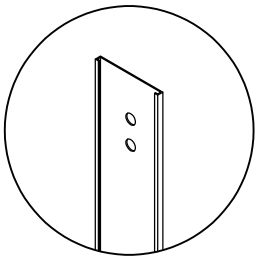

Auxiliary hole positioning plate

∅8 Drill Bit

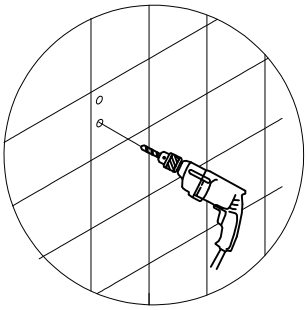

Expansion tube ∅8

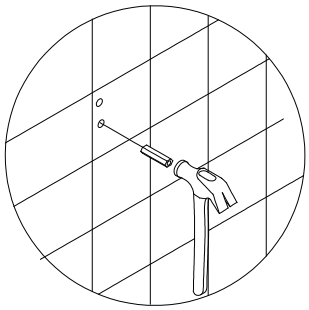

Step 1: Use the included positioning plates to align with the installation area.
Step 2: Make sure both plates are on the same plane and perpendicular to the floor.
Step 3: Drill holes at the top holes of the plates using an 8 mm (5/16") drill bit.
Step 4: Insert four Expansion Tubes (Part No. 5) into the drilled holes.

Drawings may not exactly define contour of the product.

(312) 626-9466
www.deervalleybath.com

Installation steps

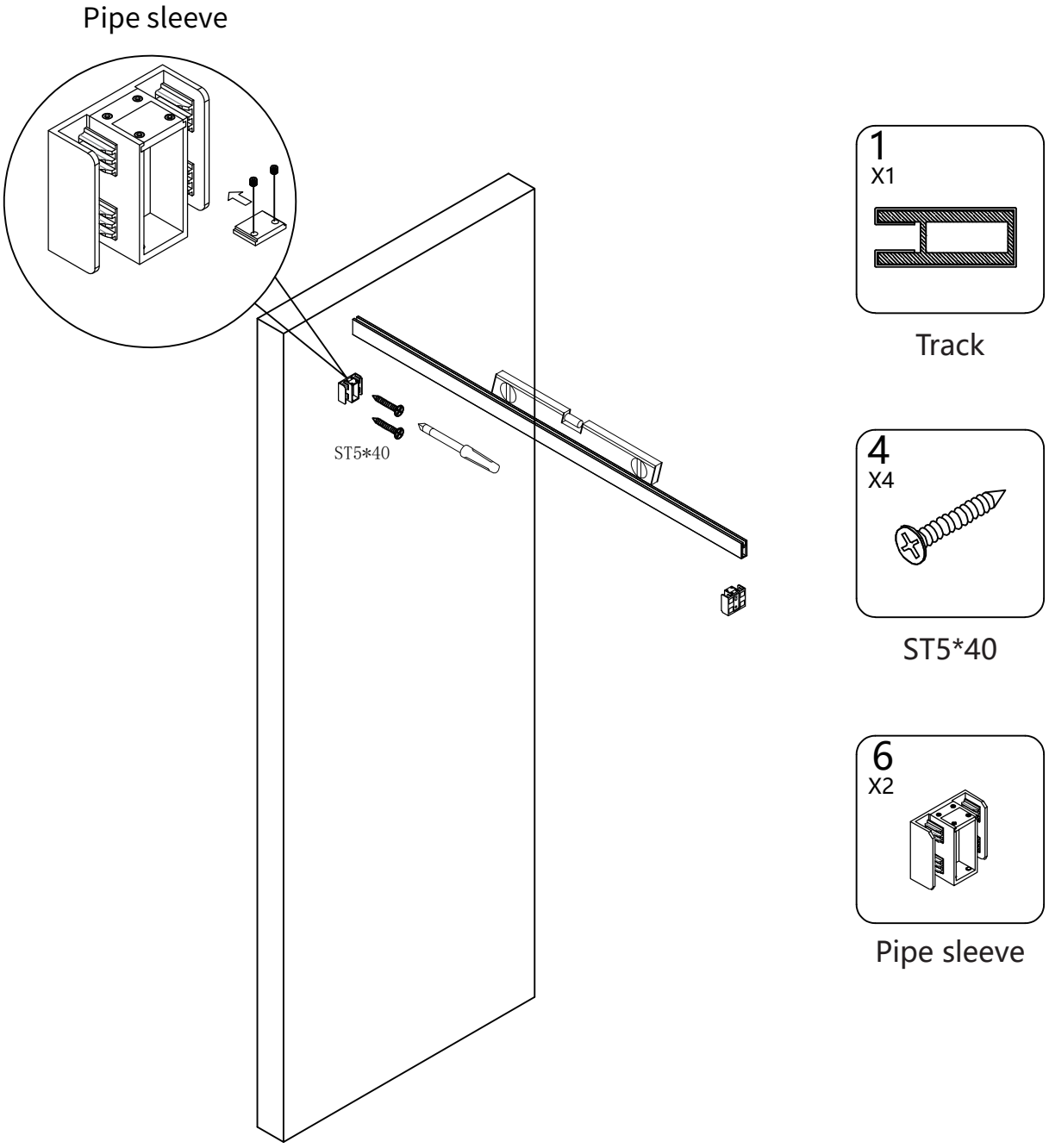

Step 5: Take out the Pipe Sleeves (Part No. 6), loosen the top screws, and remove the top caps.
Step 6: Insert both Pipe Sleeves into the holes drilled in Step 4, and secure them with Screws (Part No. 4).
Step 7: Install the Track (Part No. 1) from the top into the two Pipe Sleeves on the wall.
Step 8: Reattach the top caps removed in Step 5 onto the Pipe Sleeves, and tighten the screws.

Drawings may not exactly define contour of the product.

(312) 626-9466
www.deervalleybath.com

Installation steps

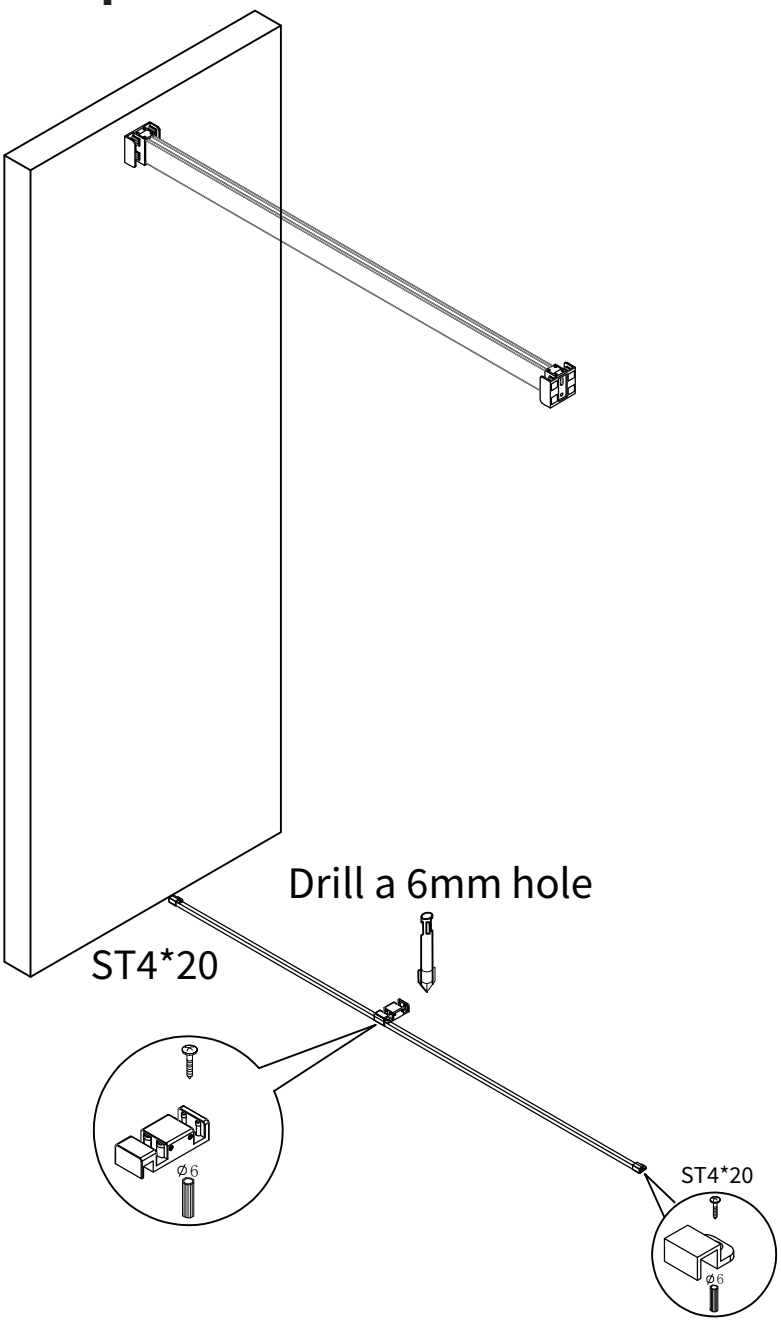

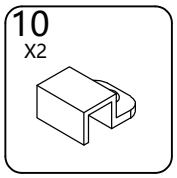

Water blocking plug

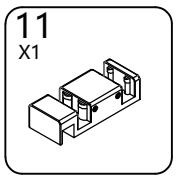

Lower slider

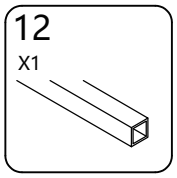

Water Blocking
- Bottom

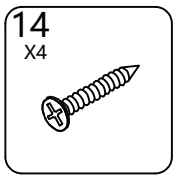

ST4*20

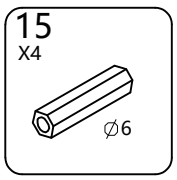

Expansion tube

Step 9: Place the Water Blocking – Bottom (Part No. 12) directly below the installed Track, ensuring they are aligned on the same plane.
Step 10: Clip the groove on the underside of the Lower Slider (Part No. 11) onto Part No. 12.
Step 11: Mark the hole positions on the floor through Parts 11 and 12, for a total of three holes.
Step 12: Remove the floor components, drill the holes with a 6 mm (1/4") drill bit, and insert the 6 mm Expansion Tubes (Part No. 15).
Step 13: Reposition the components according to the marked holes, making sure the Lower Slider (Part No. 11) is properly clipped onto the Water Blocking strip (Part No. 12), then secure them with Screws (Part No. 14).

Drawings may not exactly define contour of the product.

(312) 626-9466
www.deervalleybath.com

Installation steps

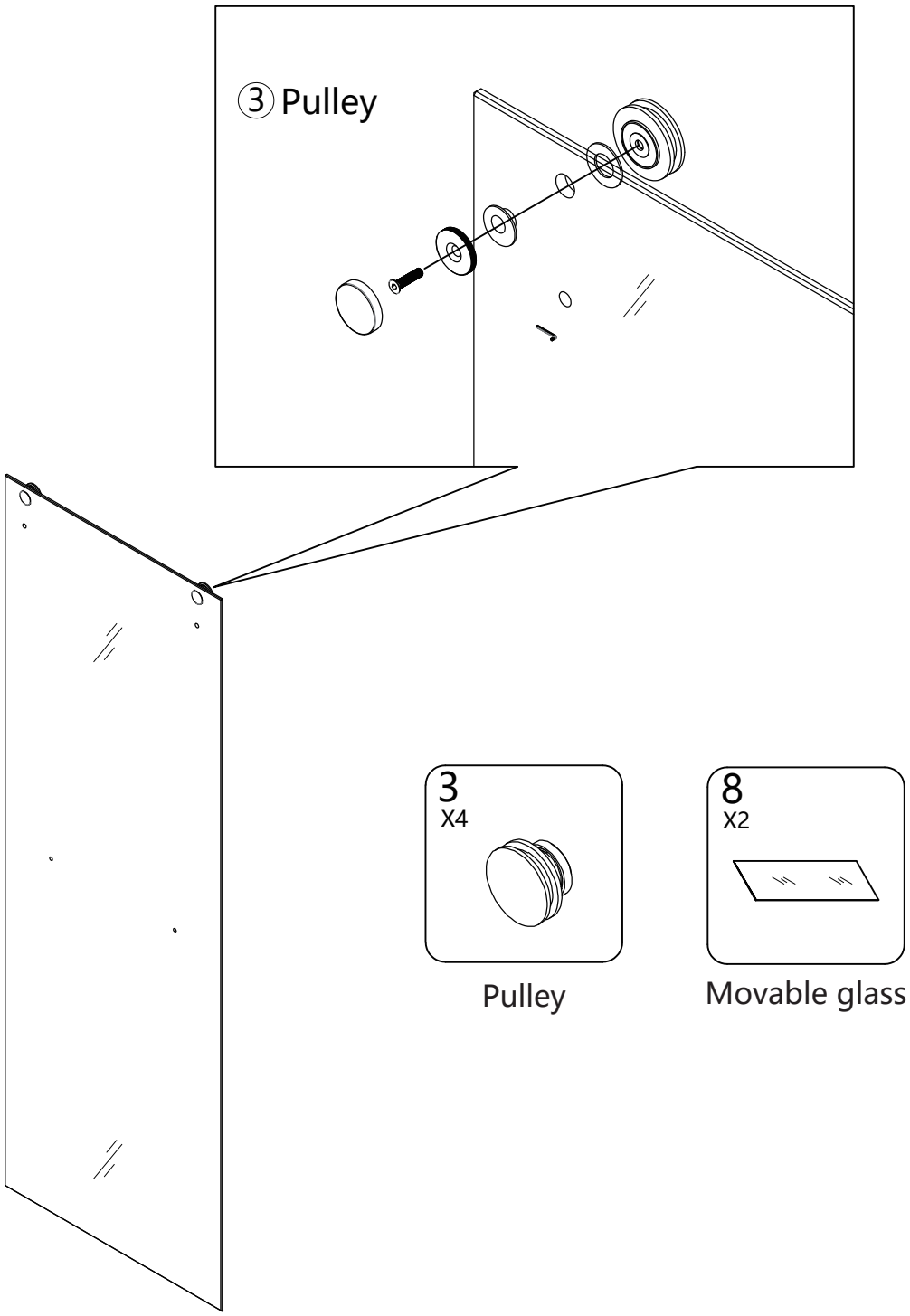

Step 14: Take out the Rollers (Part No. 3) and disassemble them. A total of 4 rollers are required.
Step 15: Take out the Glass Doors (Part No. 8). There are 2 panels in total.
Step 16: Attach the Rollers (Part No. 3) to the top of each glass door.
Note: Always ensure that only non-metallic washers are in direct contact with the glass.

Drawings may not exactly define contour of the product.

(312) 626-9466
www.deervalleybath.com

Installation Steps

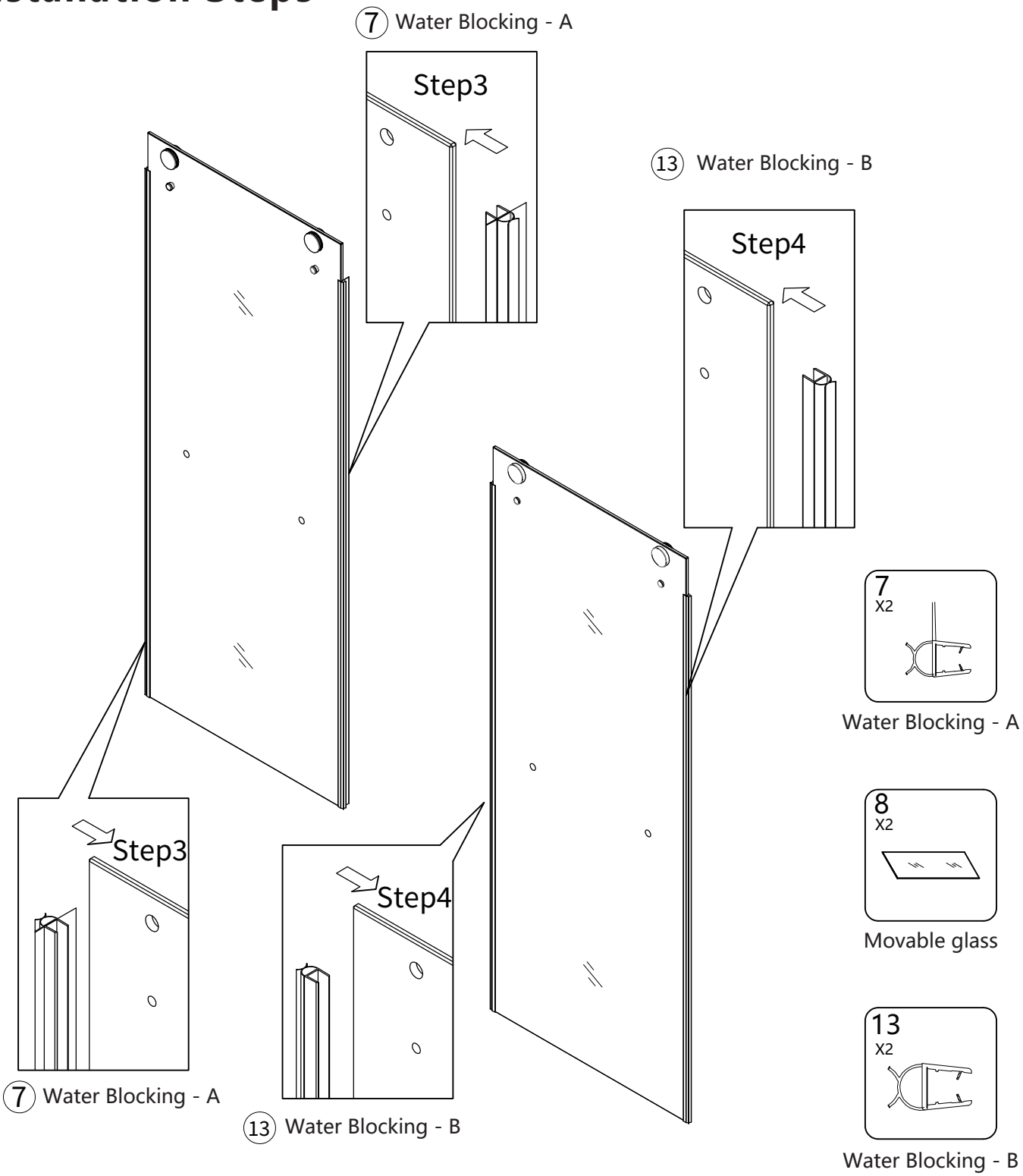

Step 17: Take out the Water Blocking Strips (Part No. 7 and Part No. 13).
Step 18: Install the two Water Blocking – A (Part No. 7) onto one glass door.
Step 19: Install the two Water Blocking – B (Part No. 13) onto the other glass door.
Note: Each glass door should be fitted with the same type of Water Blocking strip. Do not mix them up.

Drawings may not exactly define contour of the product.

(312) 626-9466
www.deervalleybath.com

Installation Steps

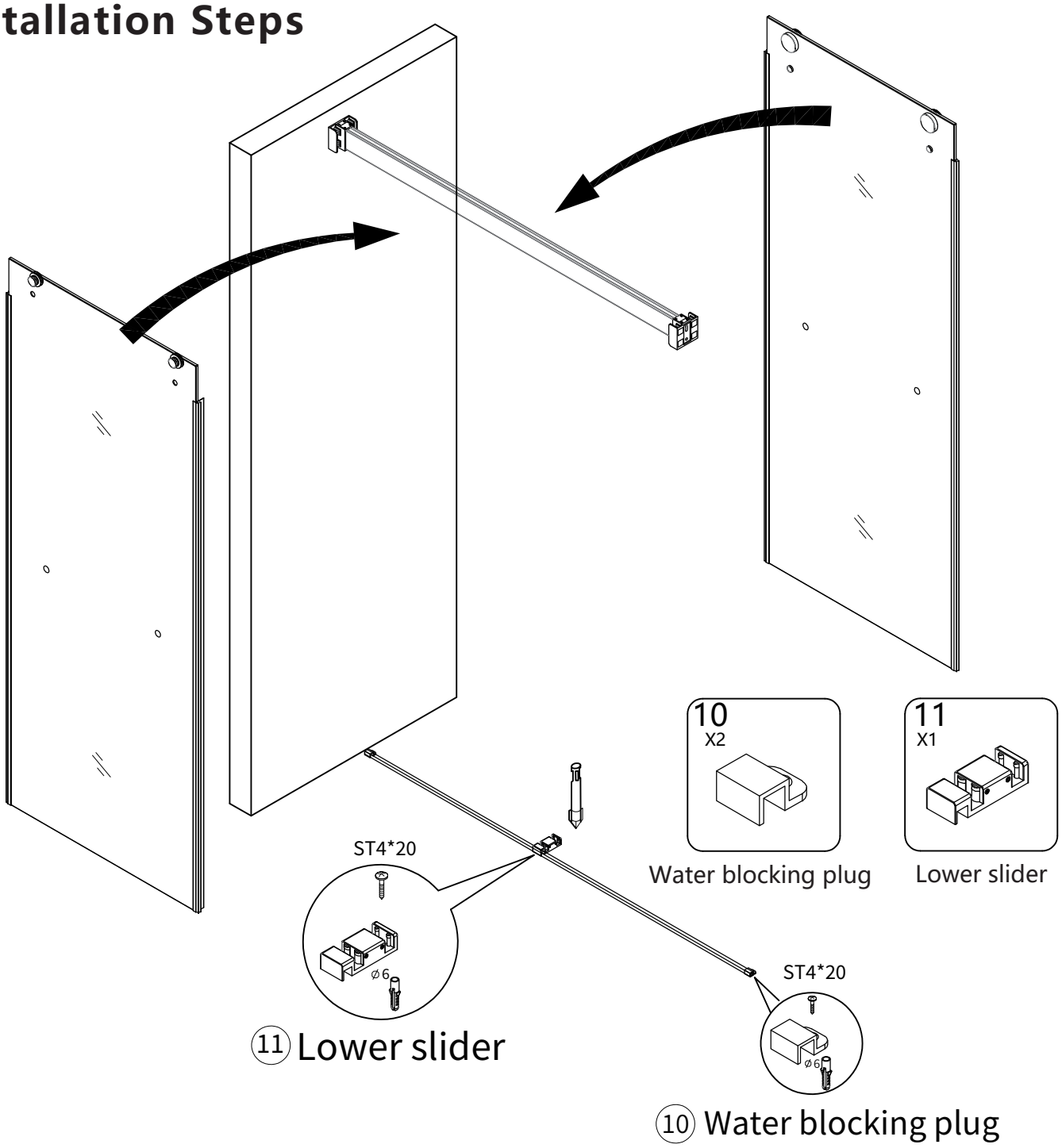

Step 20: Hang the glass door panel with Water Blocking – B (Part No. 13) onto the track first.
Step 21: Hang the other glass door panel onto the track. Pay attention to orientation—the protruding part of the Water Blocking should face the other door panel.

Note: Water Blocking – A has a vertical projection from the glass door. This projection must always face the other glass door panel to fill the gap between them and reduce water leakage.

Drawings may not exactly define contour of the product.

(312) 626-9466
www.deervalleybath.com

Installation Steps

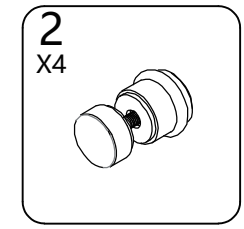

Anti jump wheel

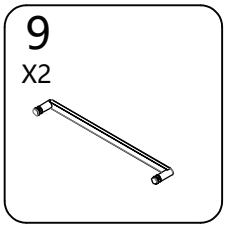

Handle

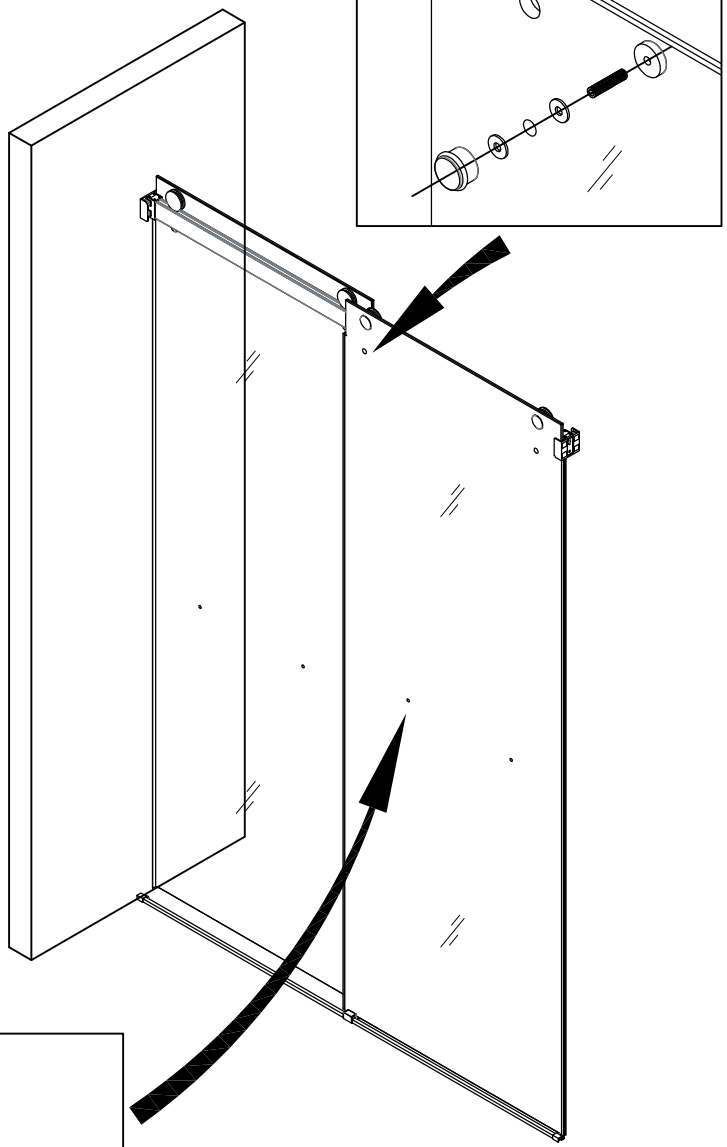

Step 22: Take out the Anti-jump Wheels (Part No. 2) and install them into the holes directly below the rollers.
Step 23: Take out the Handles (Part No. 9) and install them into the center holes of the glass panels.
Note: Always ensure that only non-metallic washers are in direct contact with the glass.

Drawings may not exactly define contour of the product.

(312) 626-9466
www.deervalleybath.com

Installation Steps

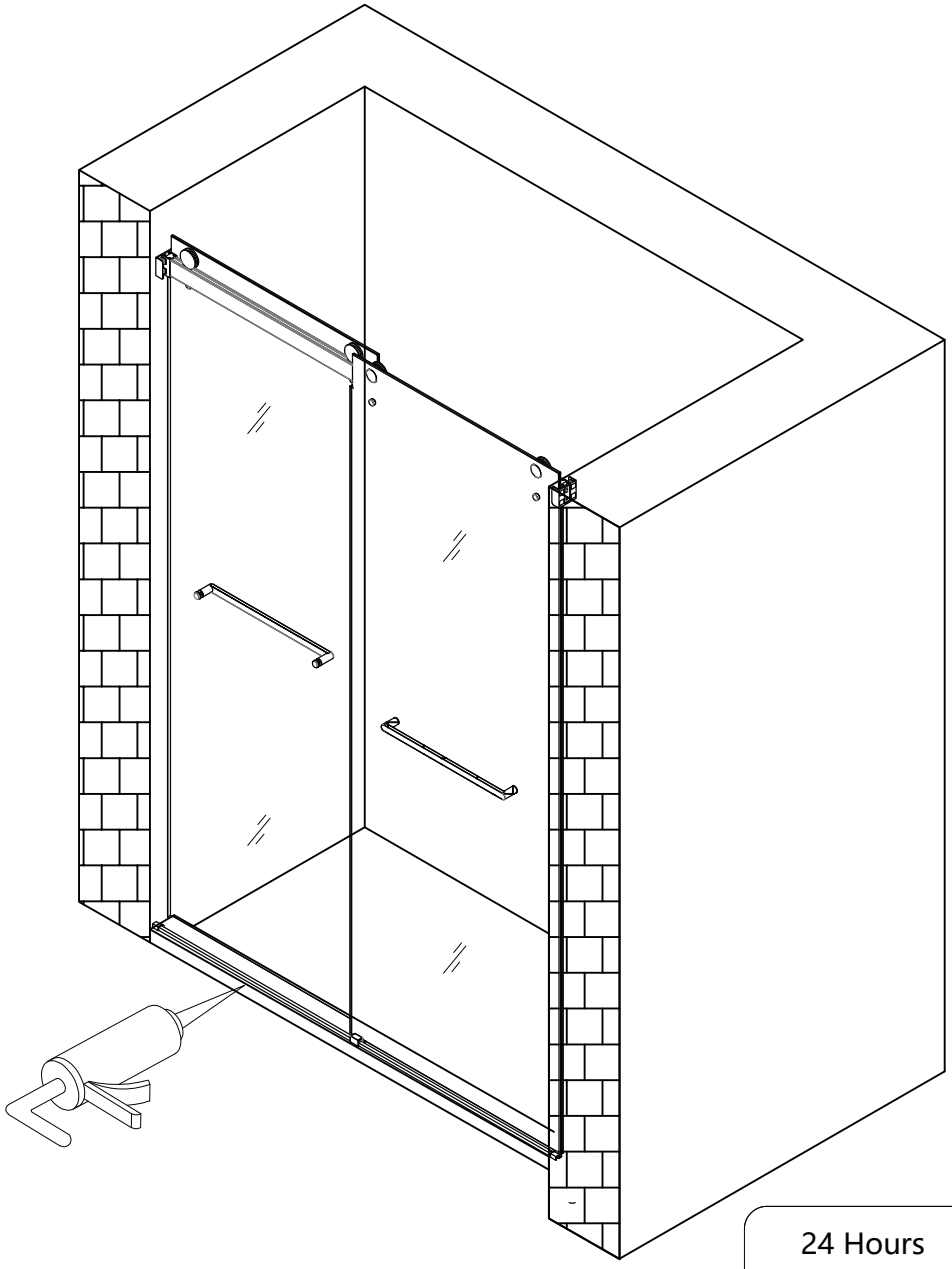

Apply waterproof silicone sealant
inside and outside.



Step 24: Apply silicone sealant to secure the frames; also bond soft guide H.
*Do not run or use water for 24 hours.

Drawings may not exactly define contour of the product.

DeerValley®

FIVE YEAR LIMITED WARRANTY

Phone: (312) 626-9466
Email: service@deervalleybath.com
Web: www.deervalleybath.com

LIMITED WARRANTY COVERAGE

5-YEAR LIMITED WARRANTY

DeerValley products are made with quality materials and excellent craftsmanship to provide customers with a long-lasting product. If any defects in materials or craftsmanship are found under normal use within the 5th year of delivery, DeerValley will provide replacement parts at no charge or, at its option, replace any product or part of the product deemed defective under normal installation, use, service, and maintenance. This warranty applies only to the original purchaser. Proof of purchase will be required to process any claims. SCRATCHES ARE NOT COVERED UNDER WARRANTY.

The manufacturer warrants that this product will be free from manufacturing defects for the duration of the above-mentioned warranty period. Please retain a copy of the original invoice as proof of purchase.

DeerValley will, at its option, (1) repair or replace the defective part(s) or product(s) at no charge; (2) issue a refund for the original purchase price of the product(s) (valid within 30 days from the date of delivery); or (3) issue a credit to be applied toward the purchase of a new DeerValley product. Shipping/delivery charges may apply and are at DeerValley's sole discretion.

DeerValley recommends that installations be performed by a licensed, professional plumber. DeerValley will not be held responsible for any damage or product failure resulting from improper installation, misuse, or failure to hire a licensed professional. Additionally, DeerValley is not responsible for any removal or installation costs.

This limited warranty does not cover goods that have been subjected to accidents, negligence, improper installation, product abuse, product misuse, or the use of cleaners containing abrasives, alcohol, or other organic solvents. Such exclusions apply regardless of whether the actions were performed by a contractor, service company, or the purchaser.

DeerValley's responsibility under this limited warranty is limited solely to the replacement of parts and does not cover any other costs. DeerValley will not be responsible for labor charges or any damage incurred during installation, repair, or replacement, nor for any indirect, incidental, or consequential damages, losses, injuries, or costs of any kind related to this product. Except as required by law, this limited warranty replaces and excludes all other warranties, conditions, and guarantees, whether expressed or implied, statutory or otherwise, including but not limited to those regarding merchantability or fitness for a particular purpose.

RESPONSIBILITIES OF OTHERS

It is the responsibility of the installer or building contractor, acting on behalf of the user, to inspect the unit prior to installation. They are responsible for ensuring that the unit is free from defects or damage. Notices are placed on and within the unit, as well as on the shipping carton, to inform the installer of their responsibility.

If a problem is identified, the unit must not be installed. DeerValley is not responsible for failures or damage that could have been identified, repaired, or prevented through proper inspection and testing prior to installation.

Damage occurring during transit is the responsibility of the carrier. The user or installer must open the crate and inspect the unit for damage upon delivery. If damage is discovered, it must be reported immediately to the seller and the carrier in writing, and an inspection must be requested. If the carrier fails to respond, the issue should be reported to both the seller and the carrier. Freight claims should be filed promptly thereafter.

LIMITATIONS AND EXCLUSIONS

This warranty does not cover negligence, misuse, abuse, improper installation, carelessness, accidents, hard water or mineral deposits, exposure to corrosive materials, misapplication, damages resulting from improper maintenance, alteration of the product, or failure to follow the care or installation instructions provided with your product. The warranty becomes void if the DeerValley product is altered or if repairs are attempted using unauthorized accessories or parts not provided by DeerValley.

DeerValley is not liable for the loss of use of its products, inconvenience, or any other incidental or consequential costs, expenses, or damages. Please note that some states do not allow the exclusion or limitation of incidental damages.

DISCLAIMER

Except as expressly stated, no warranties or obligations, whether express, implied, oral, or statutory, are provided. No dealer or other individual has the authority to make any warranties or representations regarding DeerValley or its products. DeerValley shall not be held responsible for any such unauthorized warranties or representations.

WARRANTY SERVICE

NOTE: When requesting warranty service, please ensure you have the following:

- A copy of the original invoice
- Date of installation
- Description and pictures of the defect
- Model number or product description

To obtain warranty service or replacement parts, contact DeerValley Customer Service. DeerValley will determine whether to repair or replace the product, issue a refund, or provide a credit.