ASSEMBLY INSTRUCTIONS

TWIN TRIPLE BUNK BED

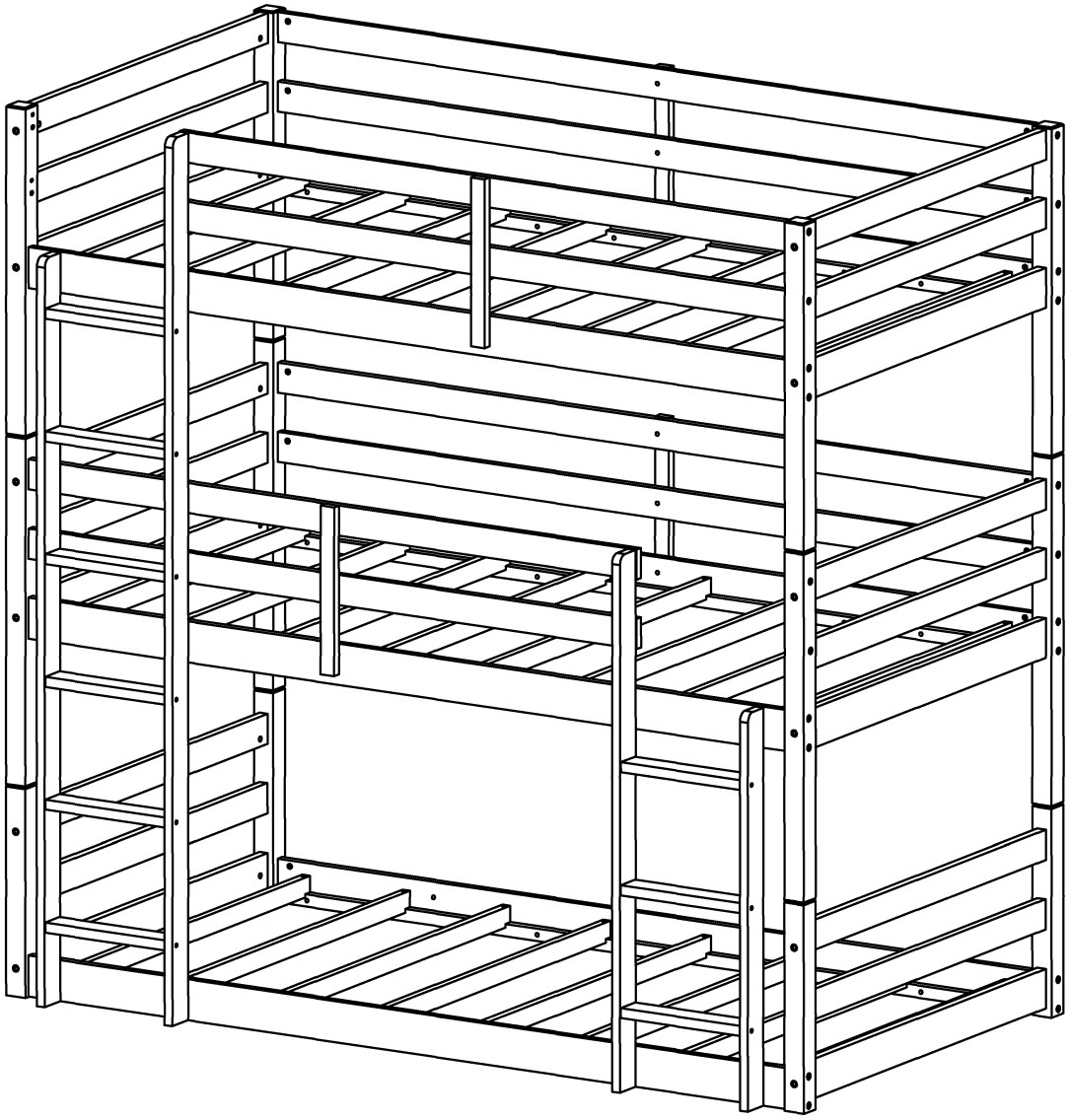

SAFETY WARNING

1. This bed is designed for use only mattress (es) meeting the following specifications on the upper bunk, and lower bunk:

Bed (Bunk bed and triple included)

Bed type	Length	With	Thickness
Twin Standard	74"-75"	38 1/2"	6" max

2. Replacement parts, including additional guardrails, maybe obtained from any of our dealer.
3. Follow the information on the warnings appearing on the upper bunk bed end structure and on the carton. Do not remove warning label from bed.
4. Always use the recommended size mattresses or mattress supports, or both, to help prevent the likelihood of entrapment or falls.
5. Surface of mattress must be at least 5" (127mm) below the upper edge of guardrails.
6. Do not allow children under 6 years of age to use the upper bunk.
7. Periodically check and ensure that the guardrail, ladder, and other components are in their proper position, free from damage, and that all connectors are tight.
8. Do not allow horseplay on or under the bed and prohibit jumping on the bed.
9. Always use the ladder for entering and leaving the upper bunk.
10. Do not use substitute part. Contact the manufacture or dealer for replacement part.
11. Use of a night light may provide added safety precaution for a child using the upper bunk.
12. Always use guardrails on both long sides of the upper bunk. If the bunk bed will be placed next to the wall, the guardrail that runs the full length of the bed should be placed against the wall to prevent entrapment between the bed and wall.
13. The use of water or sleep flotation mattresses is prohibited.
14. STRANGULATION HAZARD - Never attach or hang items to any part of the bunk bed that are not designed for use with the bed; for example, but not limited to, hook, belts and jump ropes.
15. Keep these instruction for future reference.

Detail View

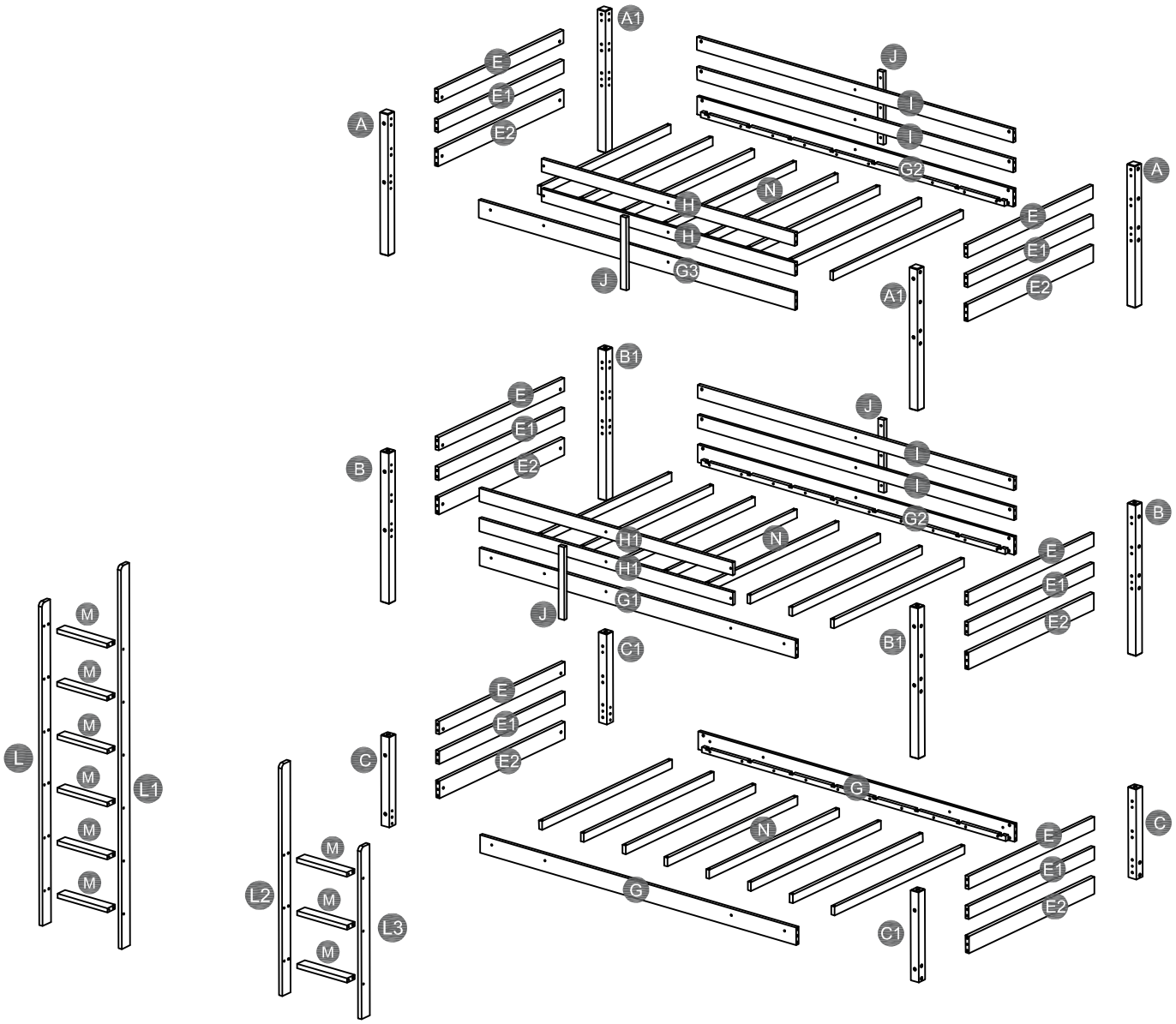
A1
E
E1
E2
A
J
I
I
G2
N
H
H
G3
J
A1
A
E
E1
E2
B1
E
E1
E2
B
J
I
I
G2
H1
H1
G1
N
J
B1
B
E
E1
E2
C1
E
E1
E2
C
G
N
G
C1
C
E
E1
E2
M
M
M
M
M
M
L
L1
M
M
M
L2
L3

Part List

A Upper Leg - 2pcs	**A1** Upper Leg - 2pcs	**B** Middle Leg - 2pcs
B1 Middle Leg - 2pcs	**C** Lower Leg - 2pcs	**C1** Lower Leg - 2pcs
E Hb. Fb. Top Panel - 6pcs	**E1** Hb. Fb. Middle Panel - 6pcs	**E2** Hb. Fb. Bottom Panel - 6pcs
G Side Rail Lower (Front & Back) - 2pcs	**G1** Side Rail Middle (Front) - 1pc	**G2** Side Rail Middle & Upper (Back) - 2pcs
G3 Side Rail Upper (Front) - 1pc	**H** Guardrail Upper (Front) - 2pcs	**H1** Guardrail Middle (Front) - 2pcs
I Guardrail Middle & Upper (Back) - 4pcs	**J** Guardrail Spindle - 4pcs	**L** Ladder Rail Left (Short) - 1pc
L1 Ladder Rail Left (Long) - 1pc	**L2** Ladder Rail Right (Long) - 1pc	**L3** Ladder Rail Right (Short) - 1pc
M Ladder Step - 9pcs	**N** Bed Slats - 24pcs	

Hardware List

1 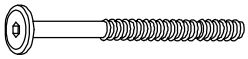 M6 x 90mm	**2** 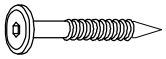 M6 x 50mm	**3** 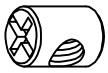 M6 x 15mm
JCBC (60pcs)	JCBC-W (32pcs)	Barrel Nut (60pcs)
4 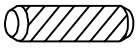 M10 x 30mm	**5** 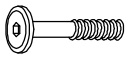 M6 x 30mm	**6** M4 x 38mm
Wood Dowel (102pcs)	JCBC (12pcs)	CSK Screw (48pcs)
7 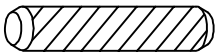 M16 x 75mm	**8**	**9**
Wood Dowel (8pcs)	Sticker Cap (20pcs)	M4 Allen Key (1pc)

ASSEMBLY TOOLS REQUIRED (NOT INCLUDED)

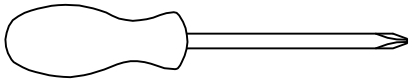

(Phillip head screwdriver)

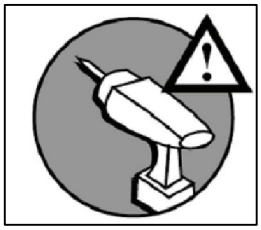

DO NOT USE POWER TOOLS TO ASSEMBLE THIS PRODUCT!

STEP 1:

1	3	4
8PCS	8PCS	20PCS

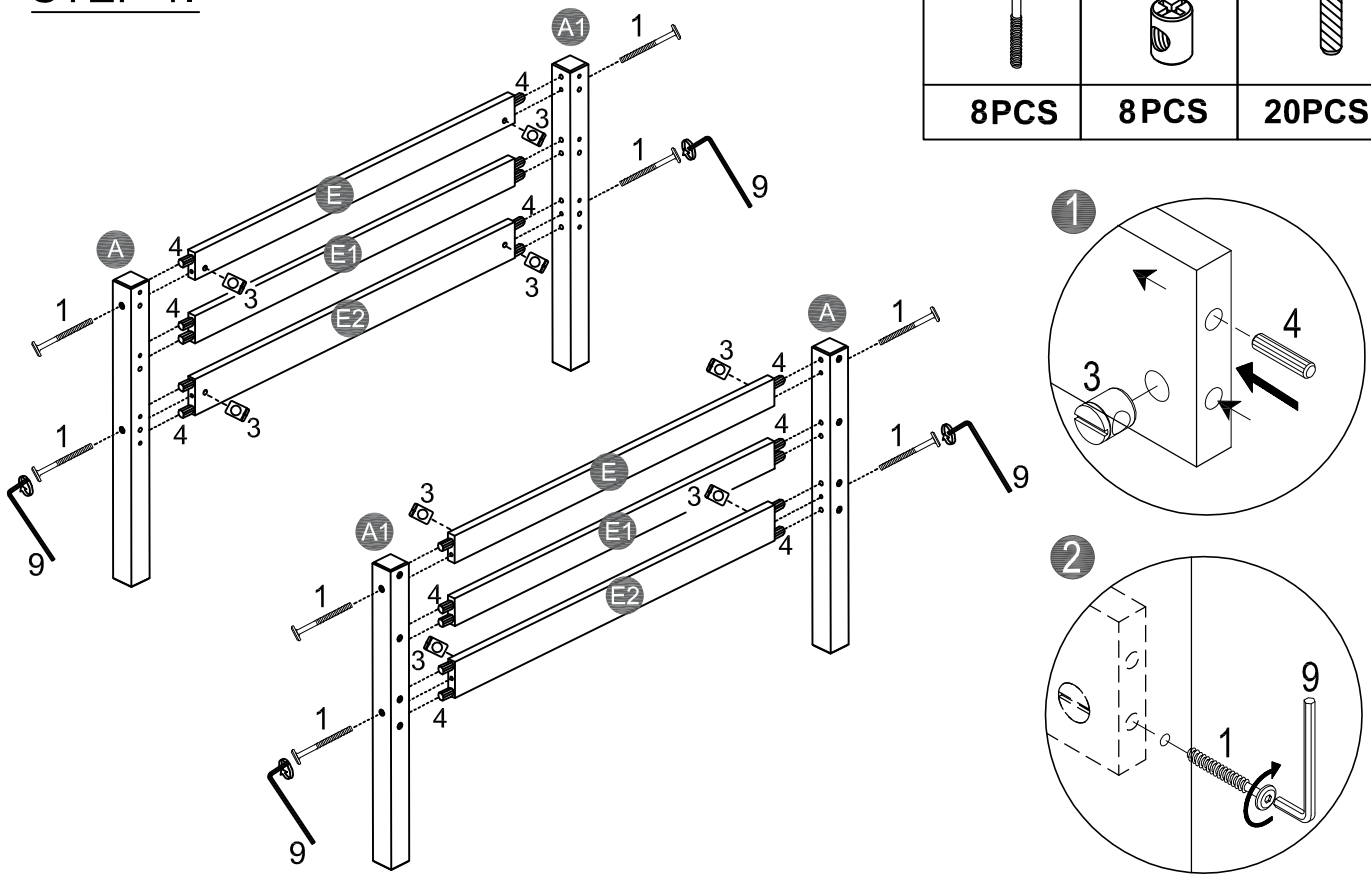

STEP 2:

1	3	4	5
12PCS	12PCS	8PCS	4PCS

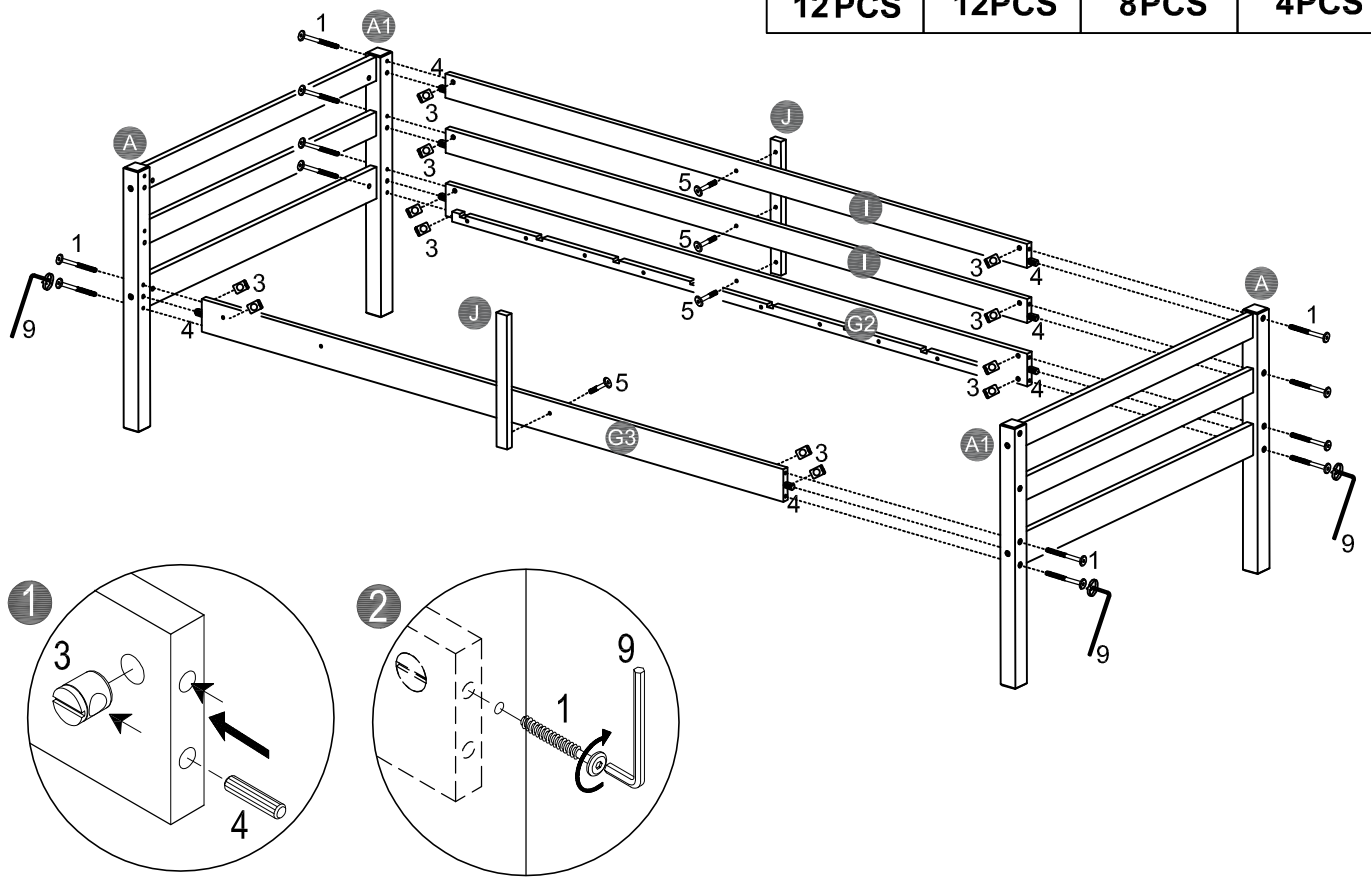

STEP 3:

1	3	4	5
2PCS	2PCS	2PCS	2PCS

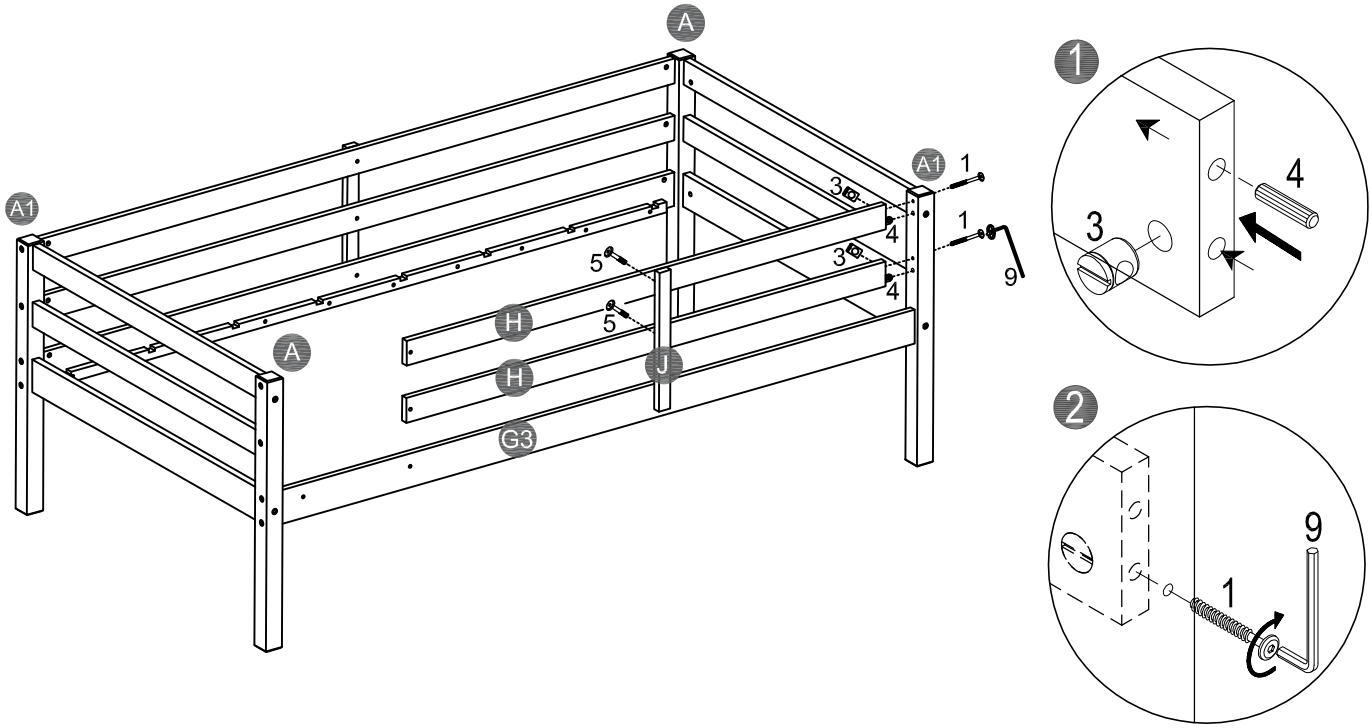

STEP 4:

6
14PCS

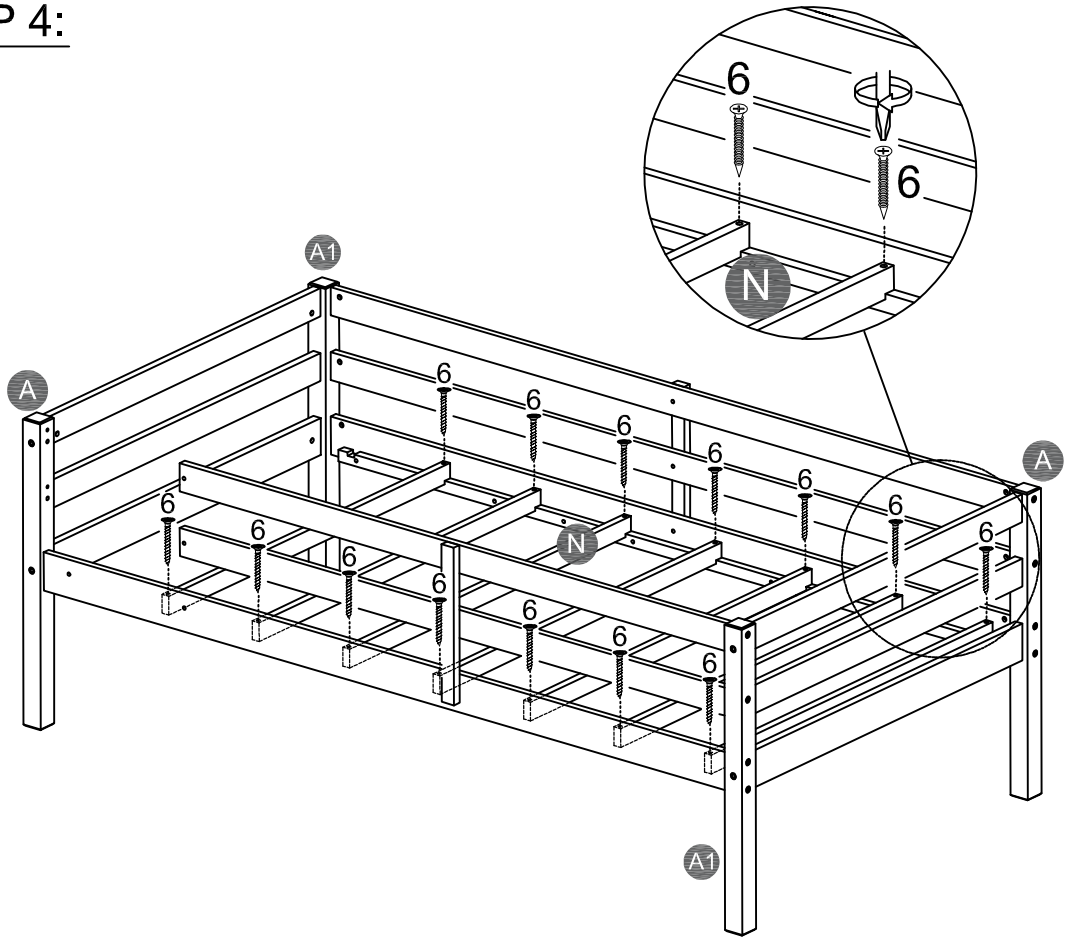

STEP 5:

1	3	4
8PCS	8PCS	20PCS

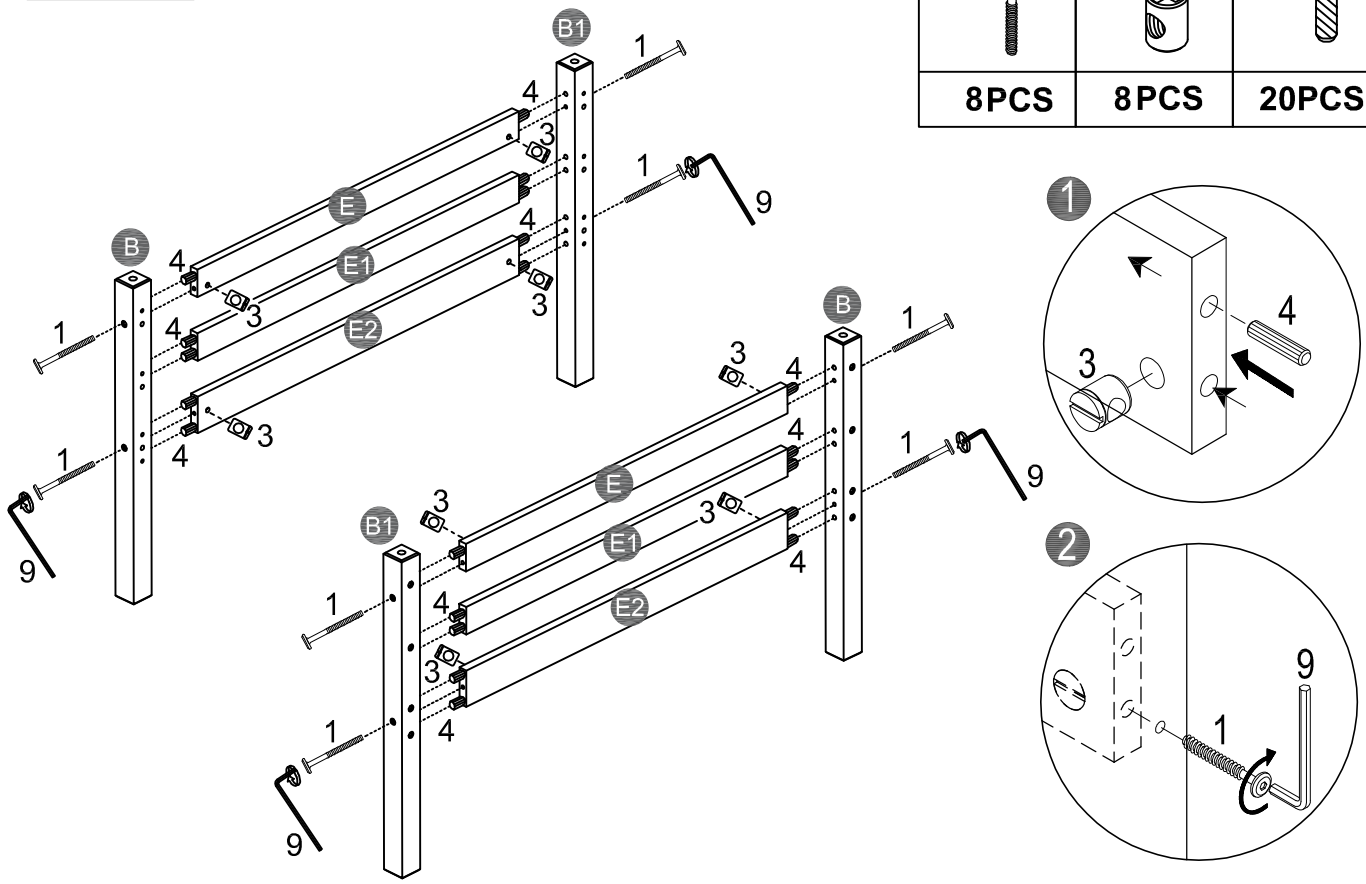

STEP 6:

1	3	4	5
12PCS	12PCS	8PCS	4PCS

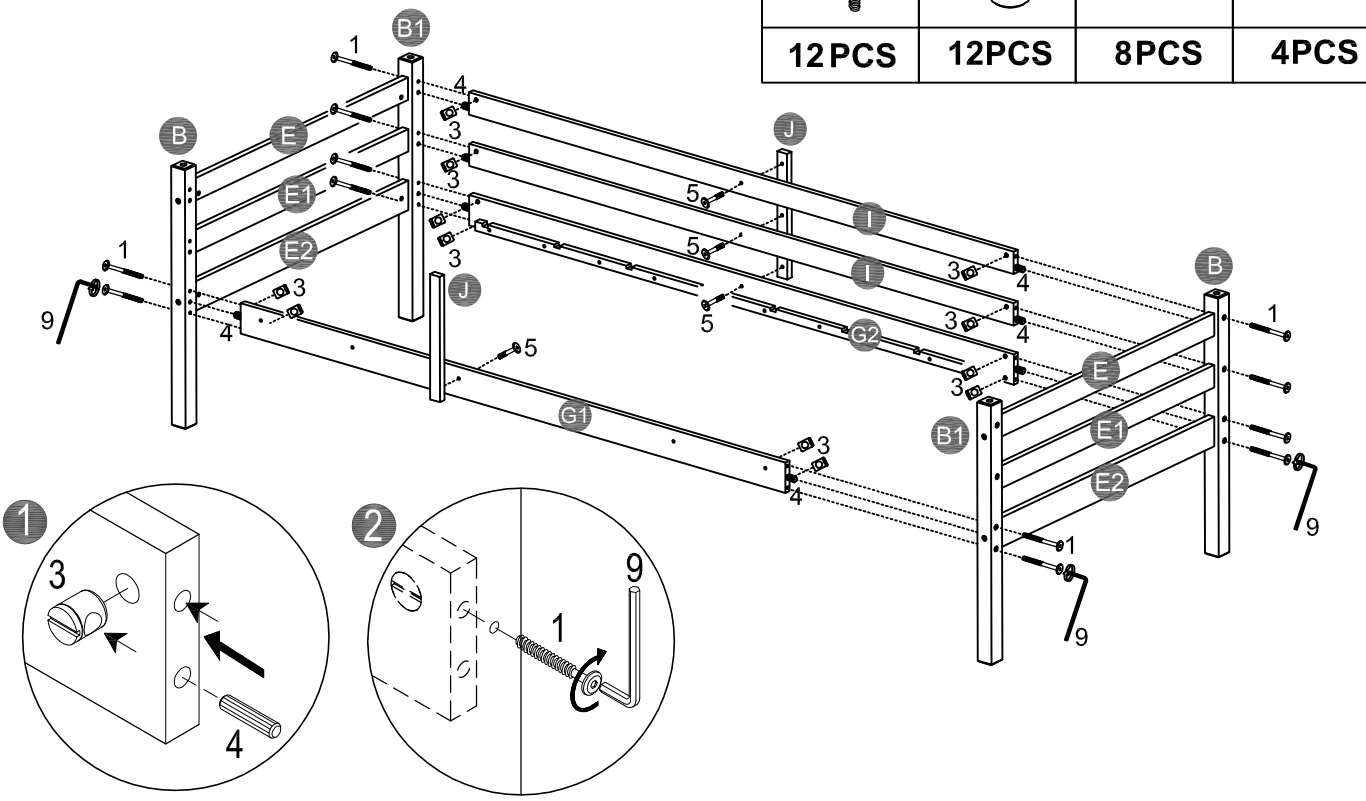

STEP 7:

1	3	4	5
2PCS	2PCS	2PCS	2PCS

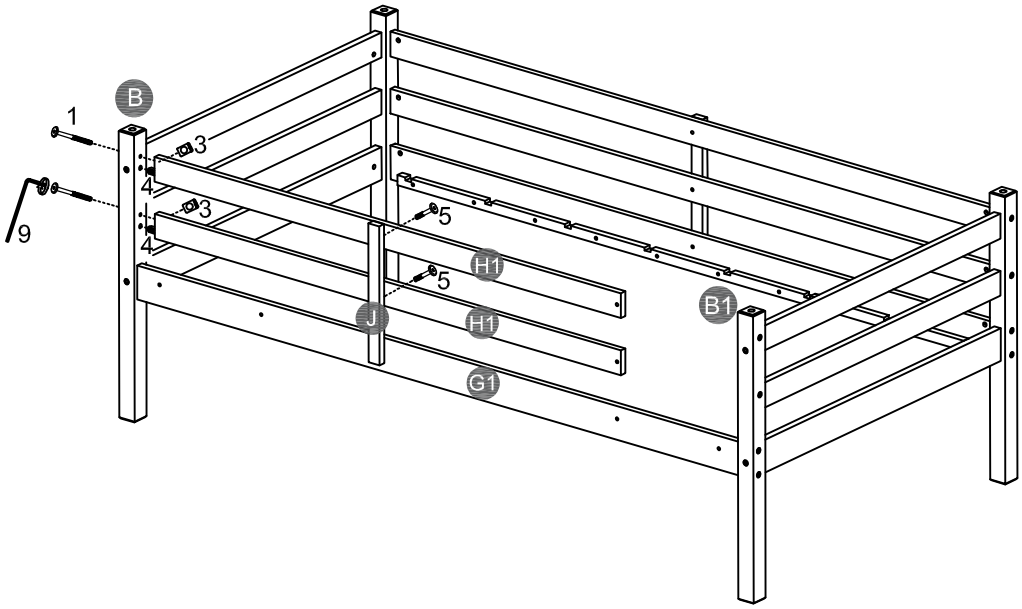

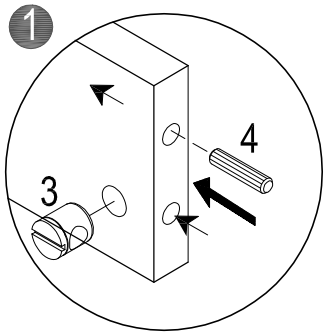

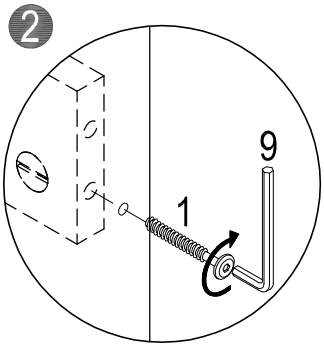

STEP 8:

6
12PCS

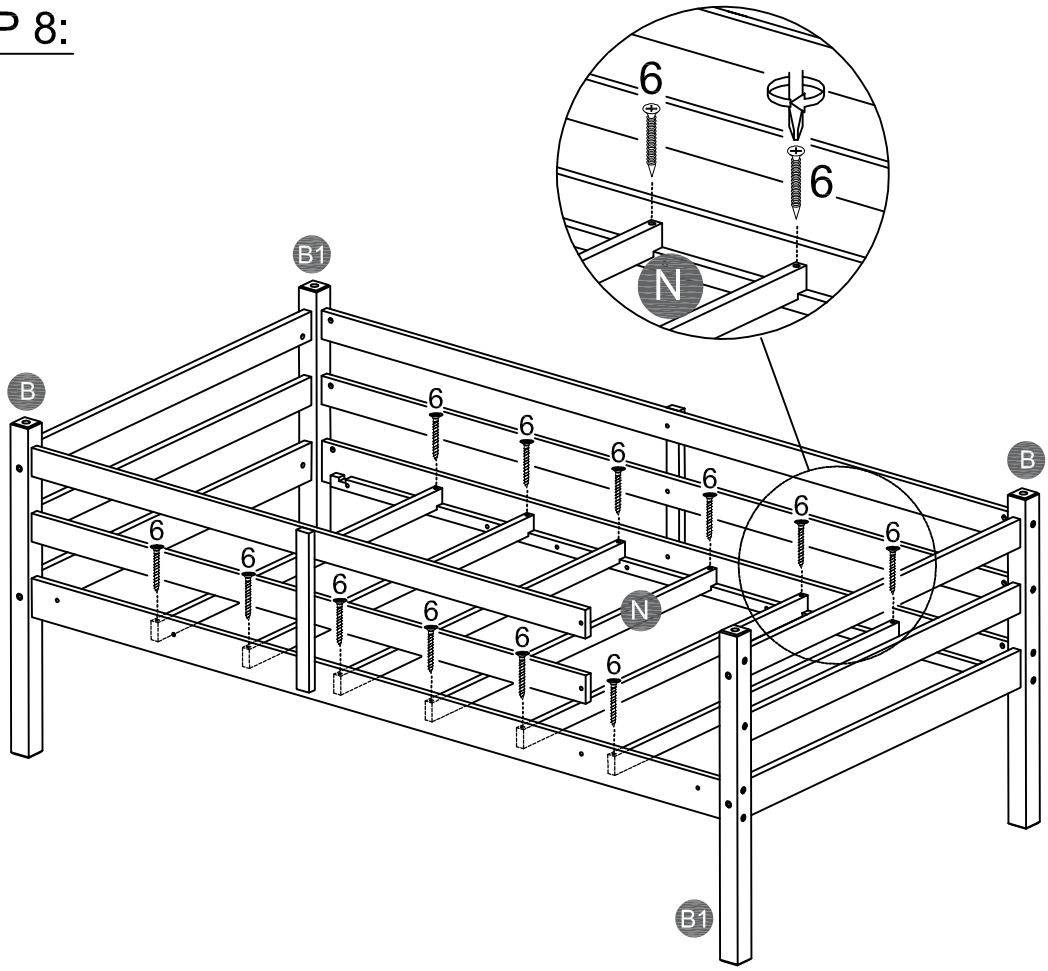

STEP 9:

1	3	4
8PCS	8PCS	20PCS

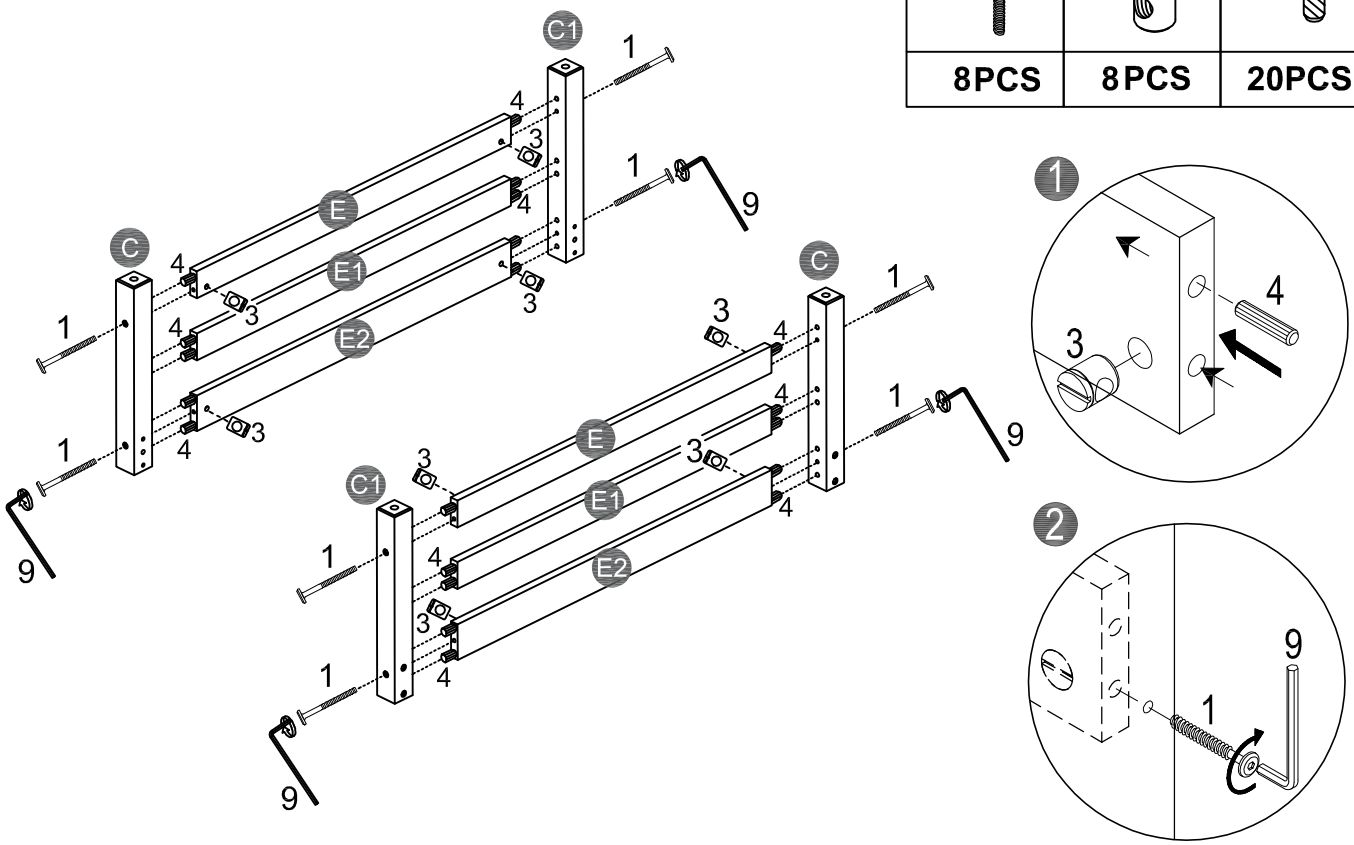

STEP 10:

1	3	4
8PCS	8PCS	4PCS

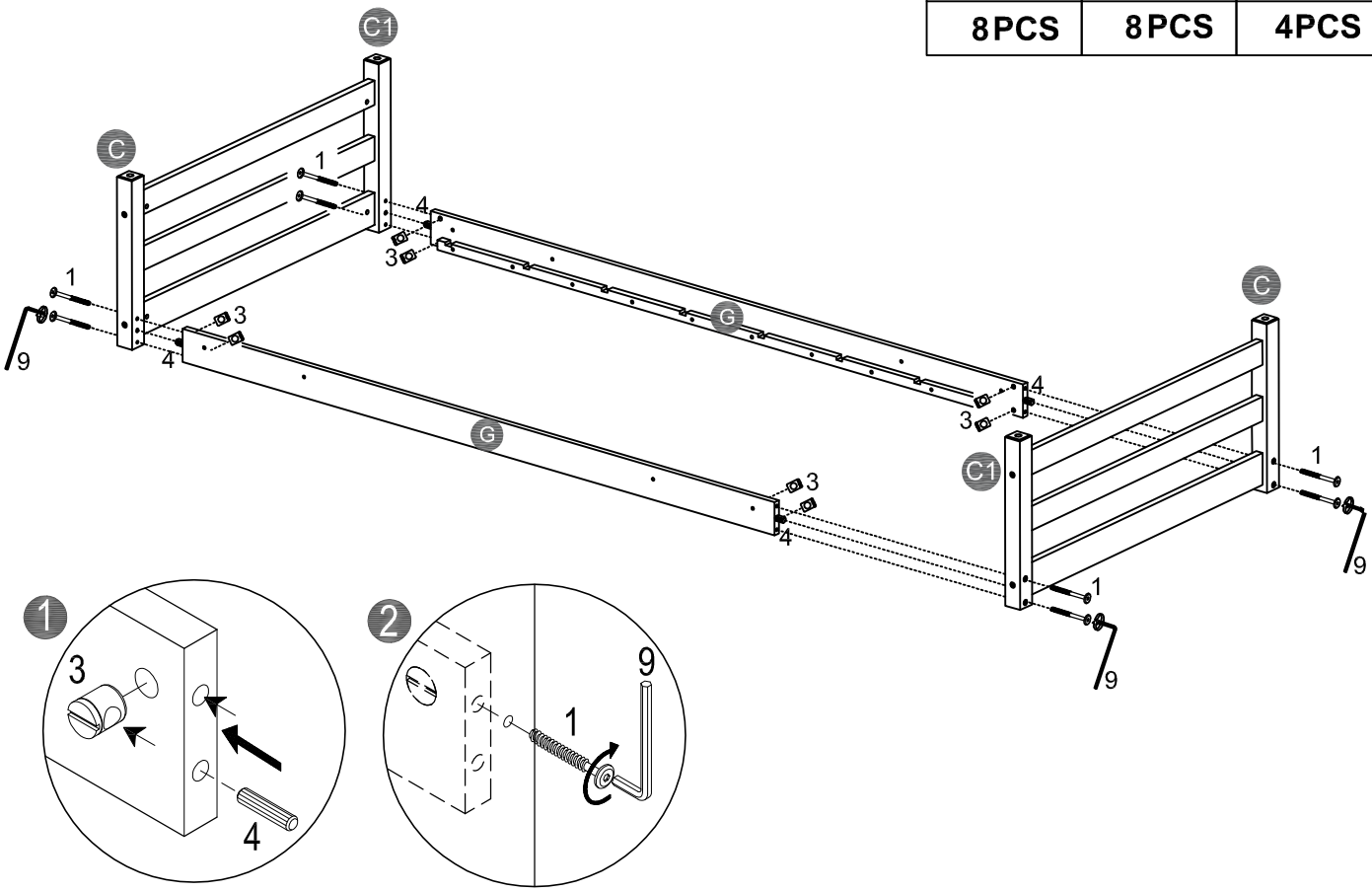

STEP 11:

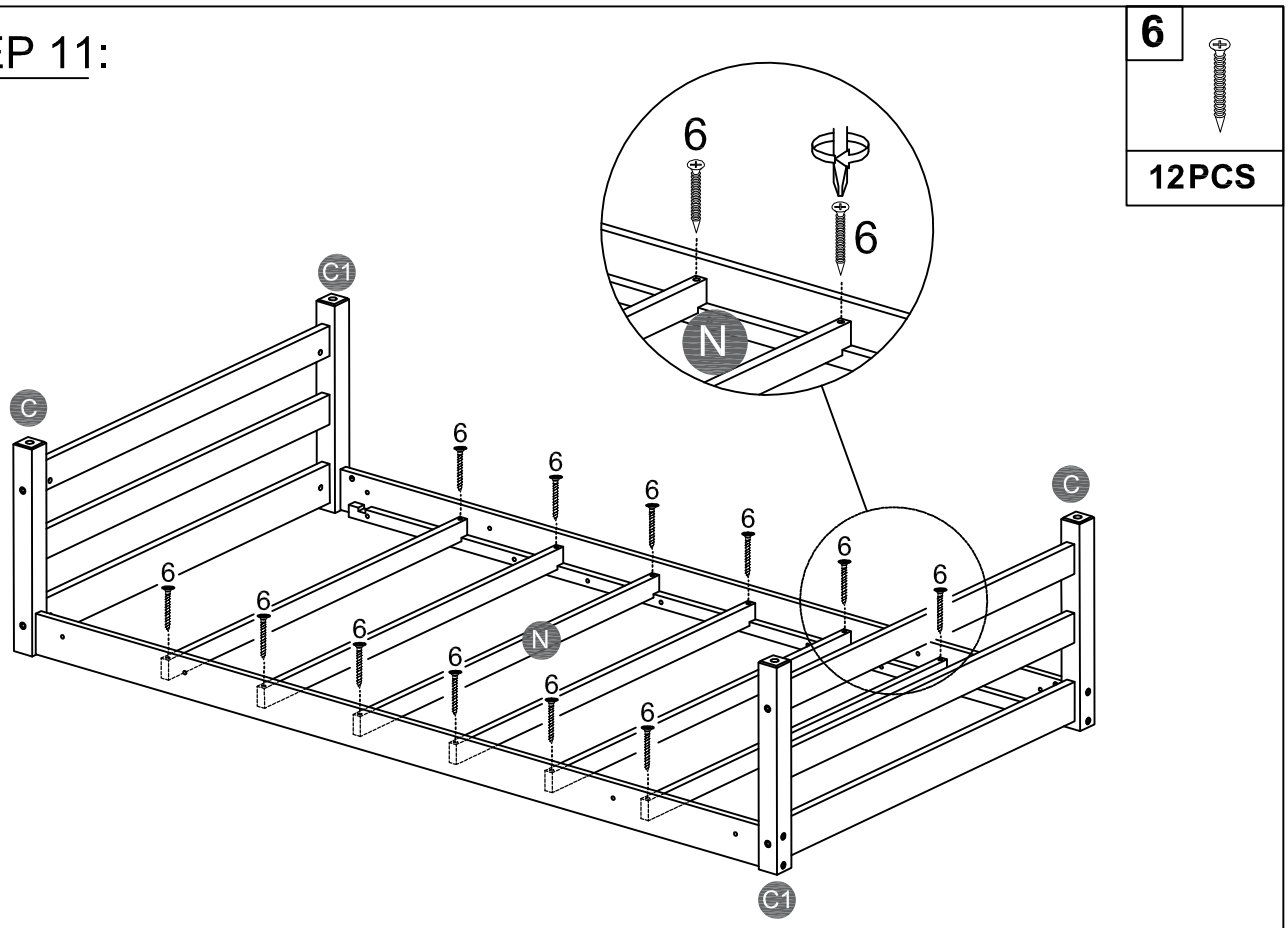

STEP 12:

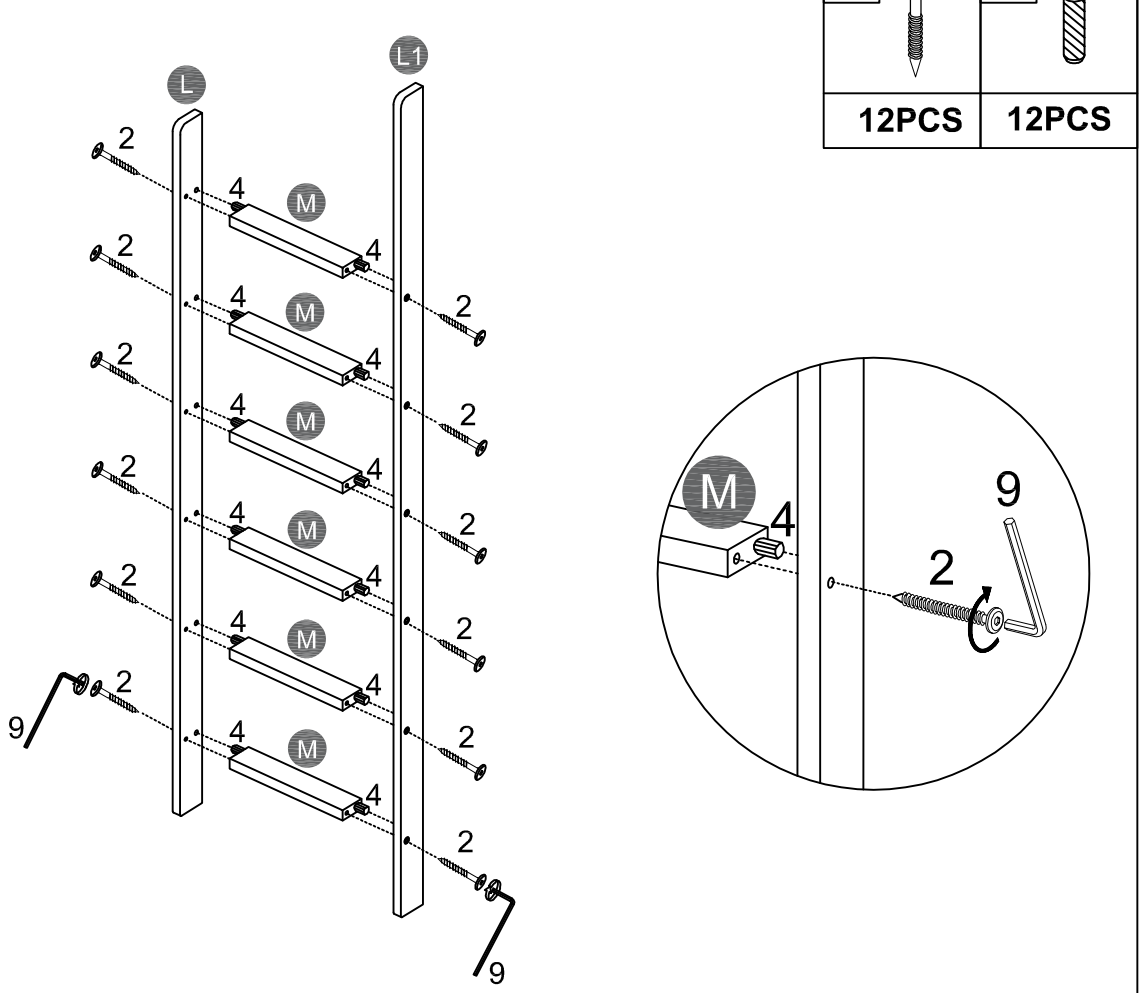

STEP 13:

2	4
6PCS	6PCS

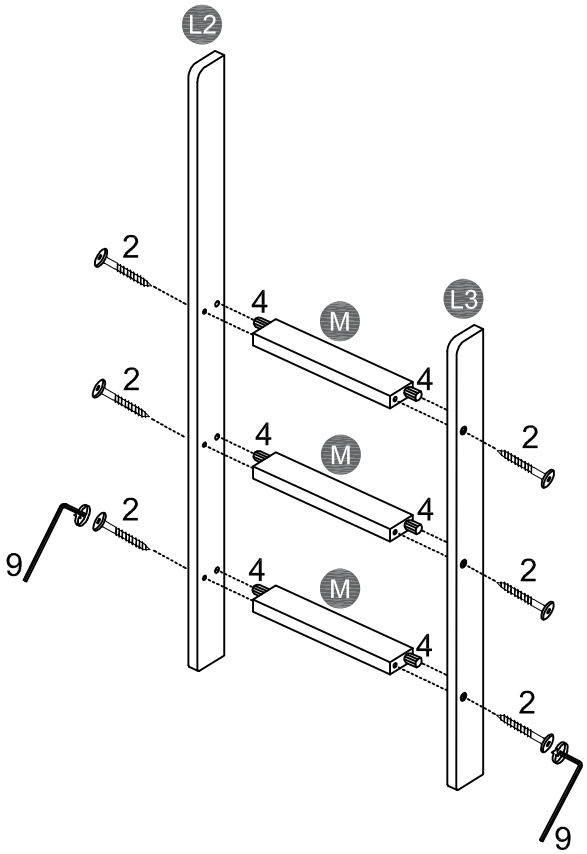

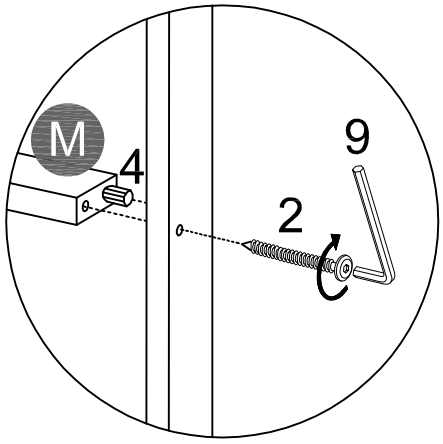

STEP 14:

7
4PCS

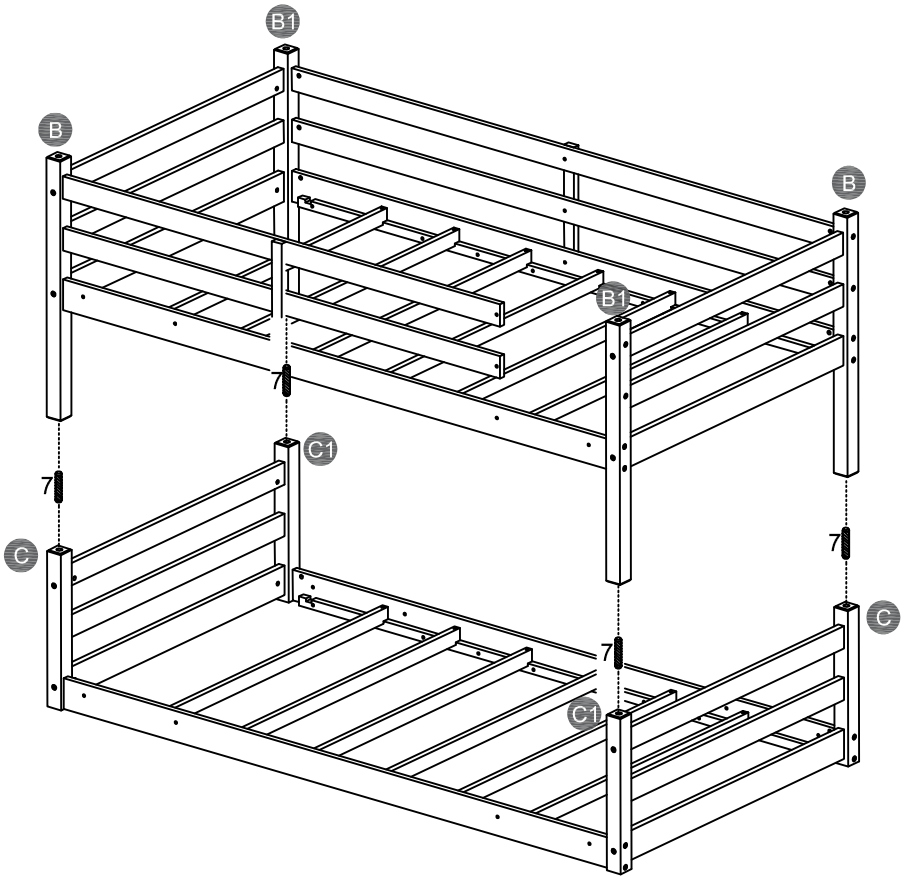

STEP 15:

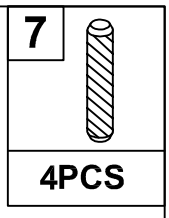

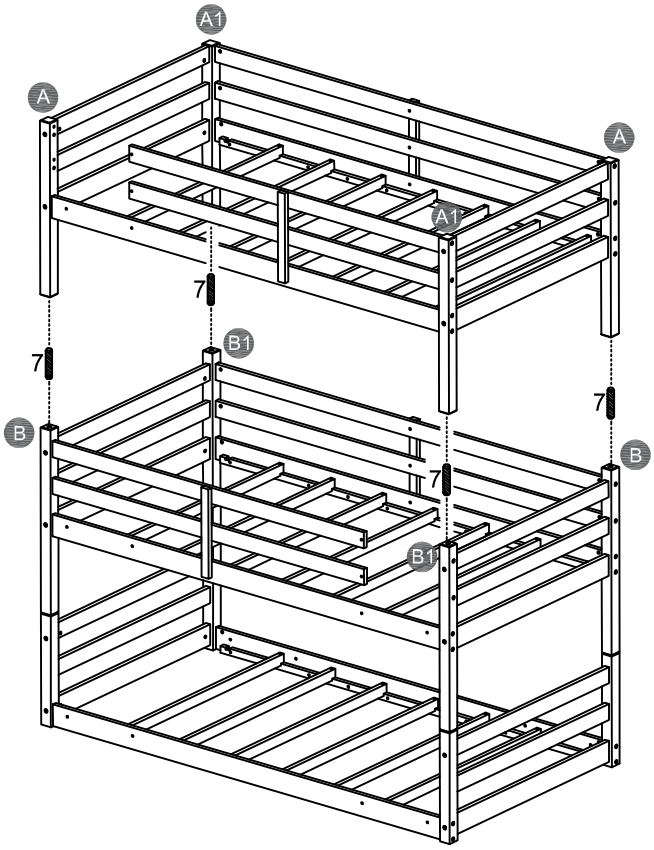

STEP 16:

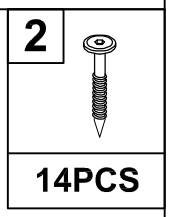

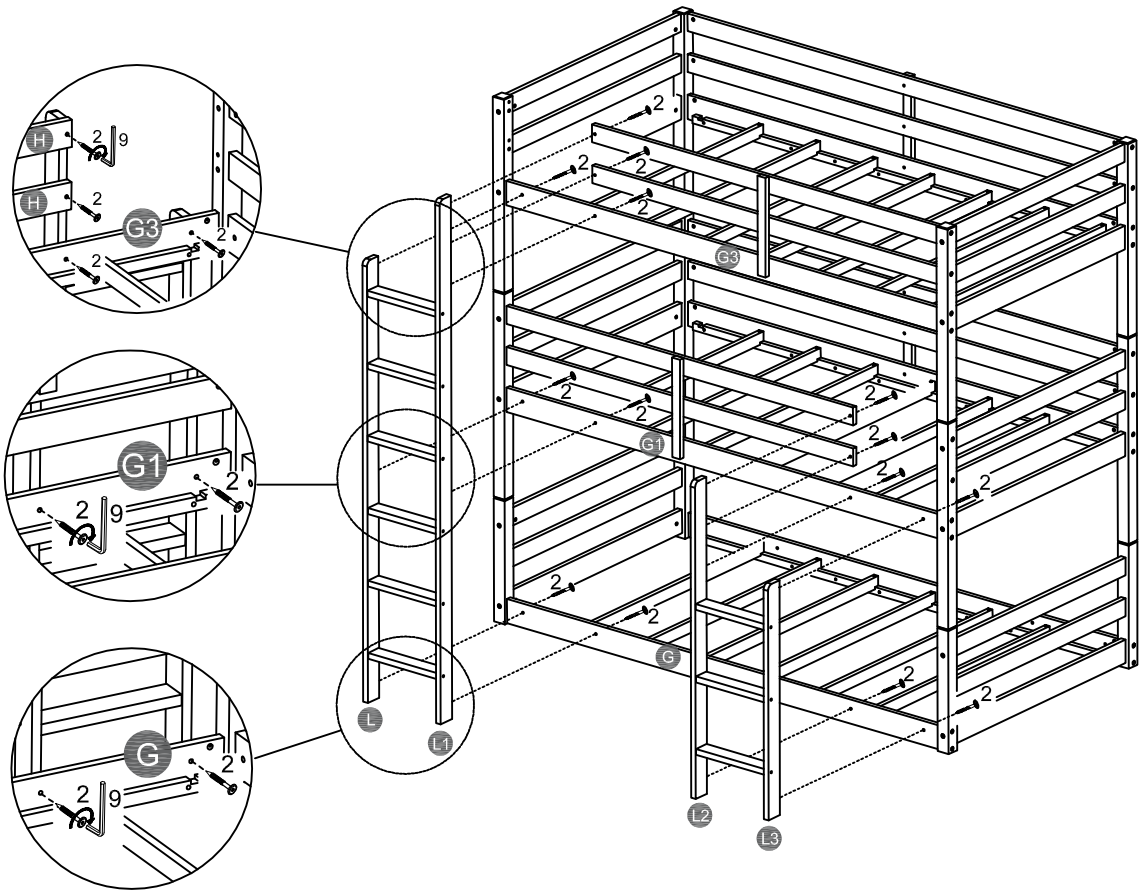

STEP 17:

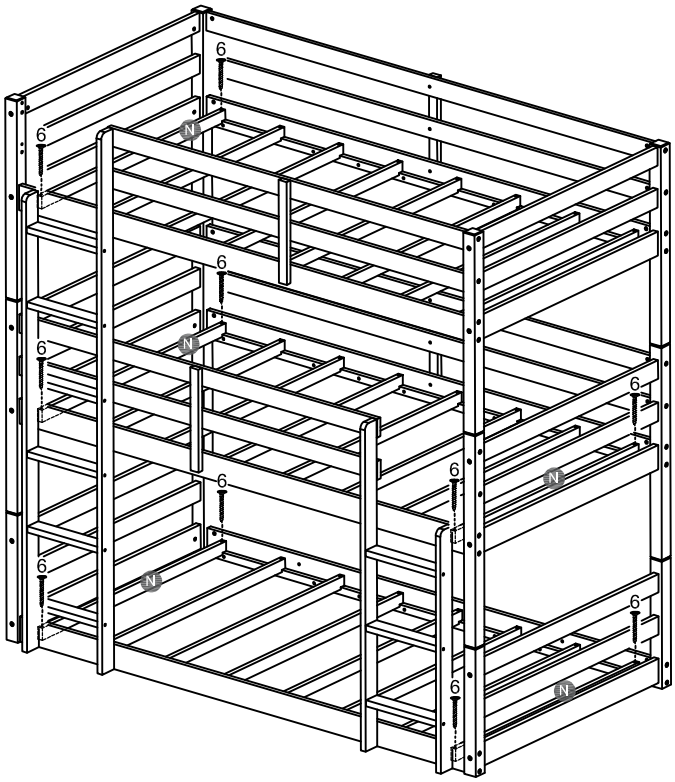

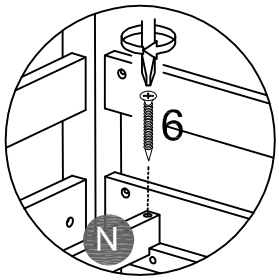

6

10PCS

STEP 18:

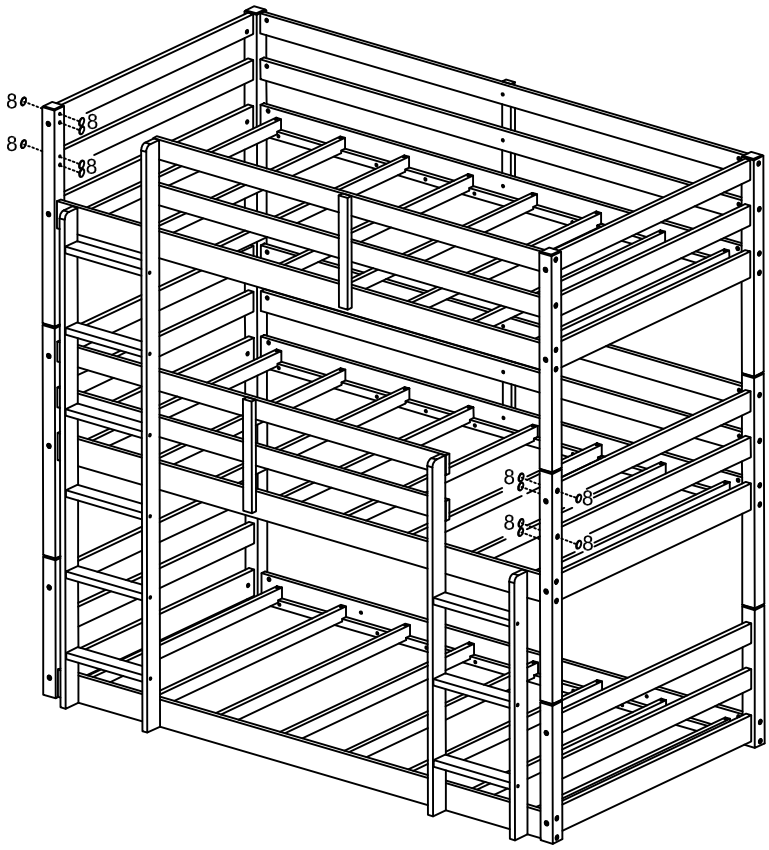

8

12PCS

STEP 1: Converting the Bunk Bed into Three Single Beds

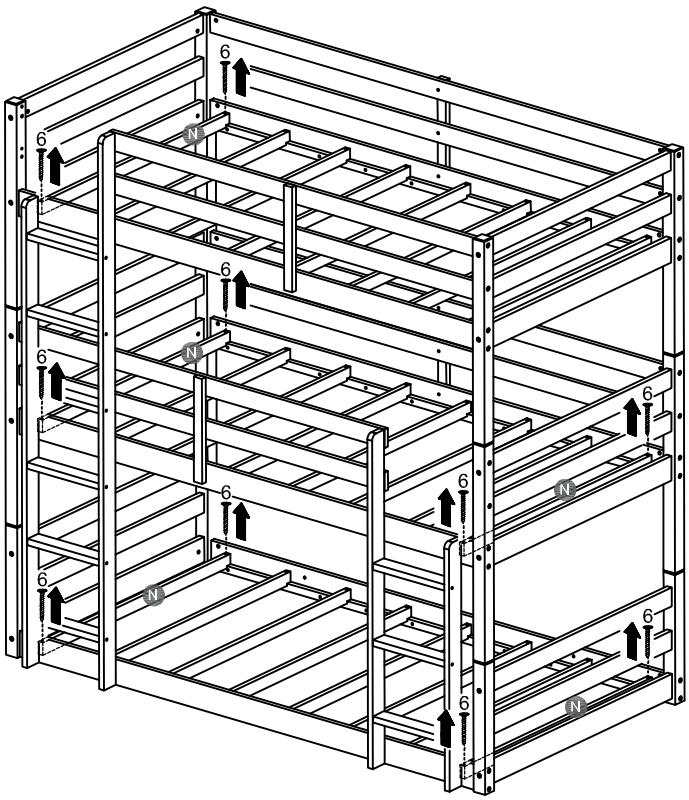

STEP 2:

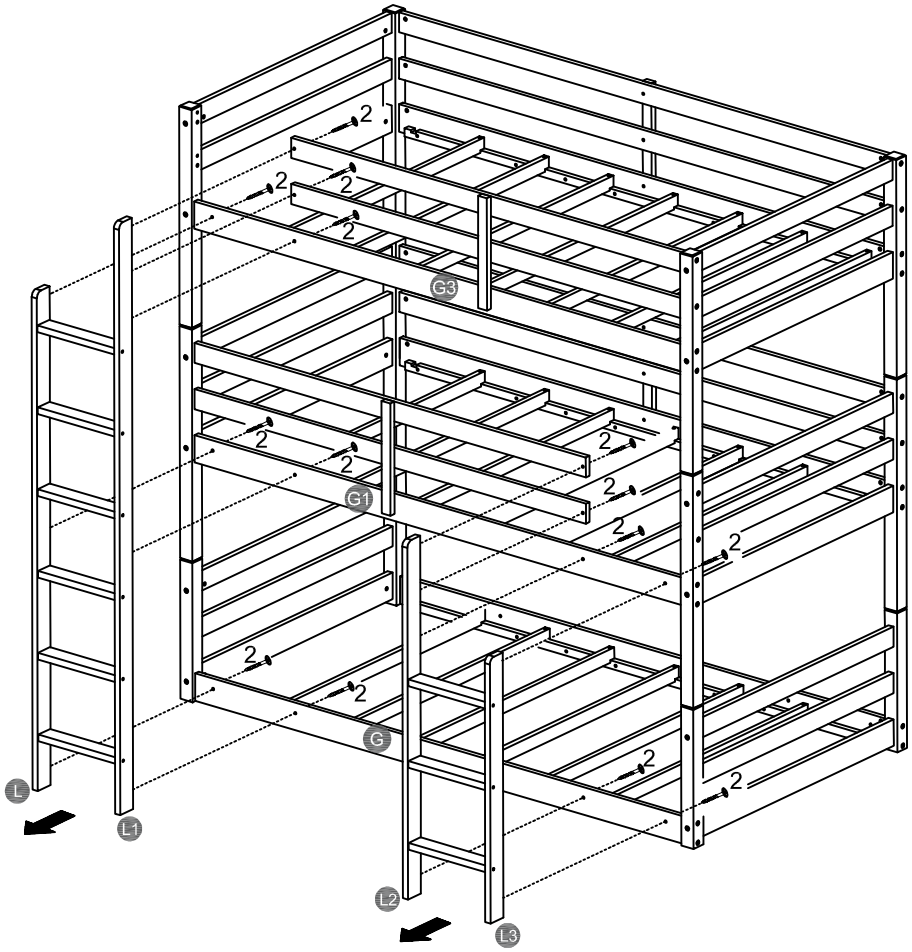

STEP 3:

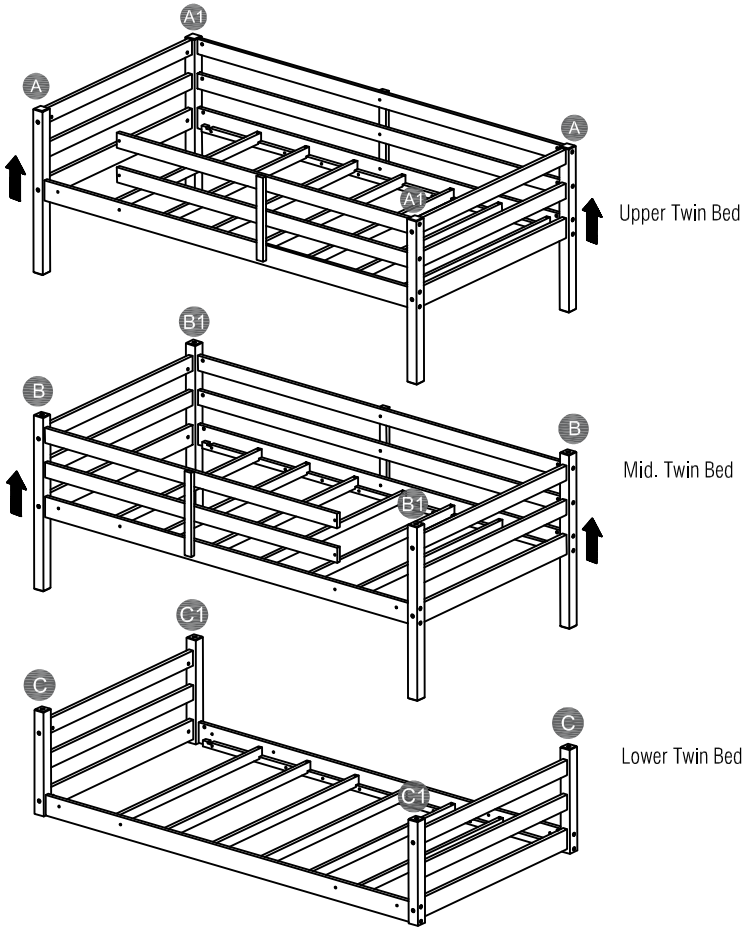
A1
A
A
A1
Upper Twin Bed
B1
B
B
B1
Mid. Twin Bed
C1
C
C
C1
Lower Twin Bed

STEP 4:

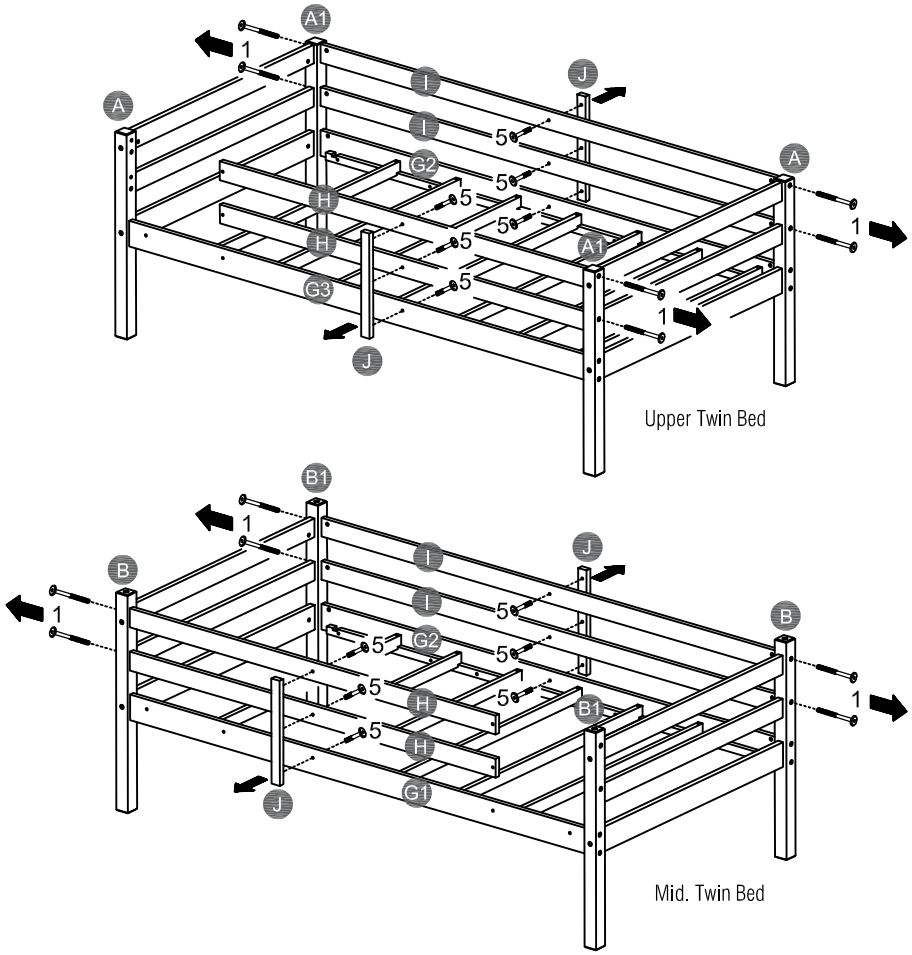
A1
1
I
J
A
I
5
G2
5
A
H
5
5
1
H
5
A1
G3
5
1
J
Upper Twin Bed
B1
1
I
J
B
I
5
B
1
5
G2
5
5
H
5
B1
1
5
H
G1
J
Mid. Twin Bed

STEP 5:

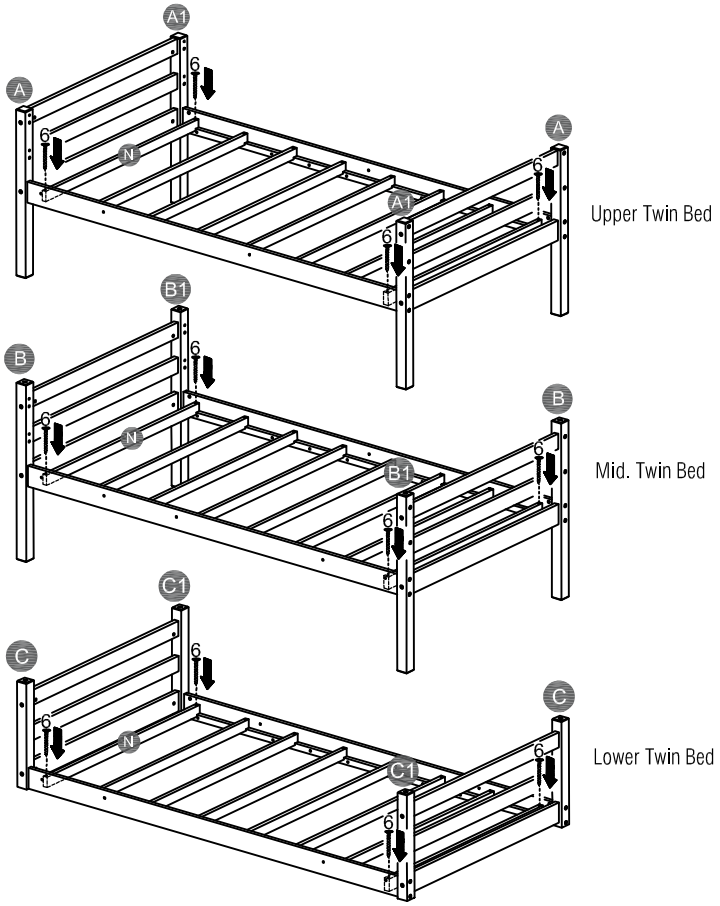

STEP 6:
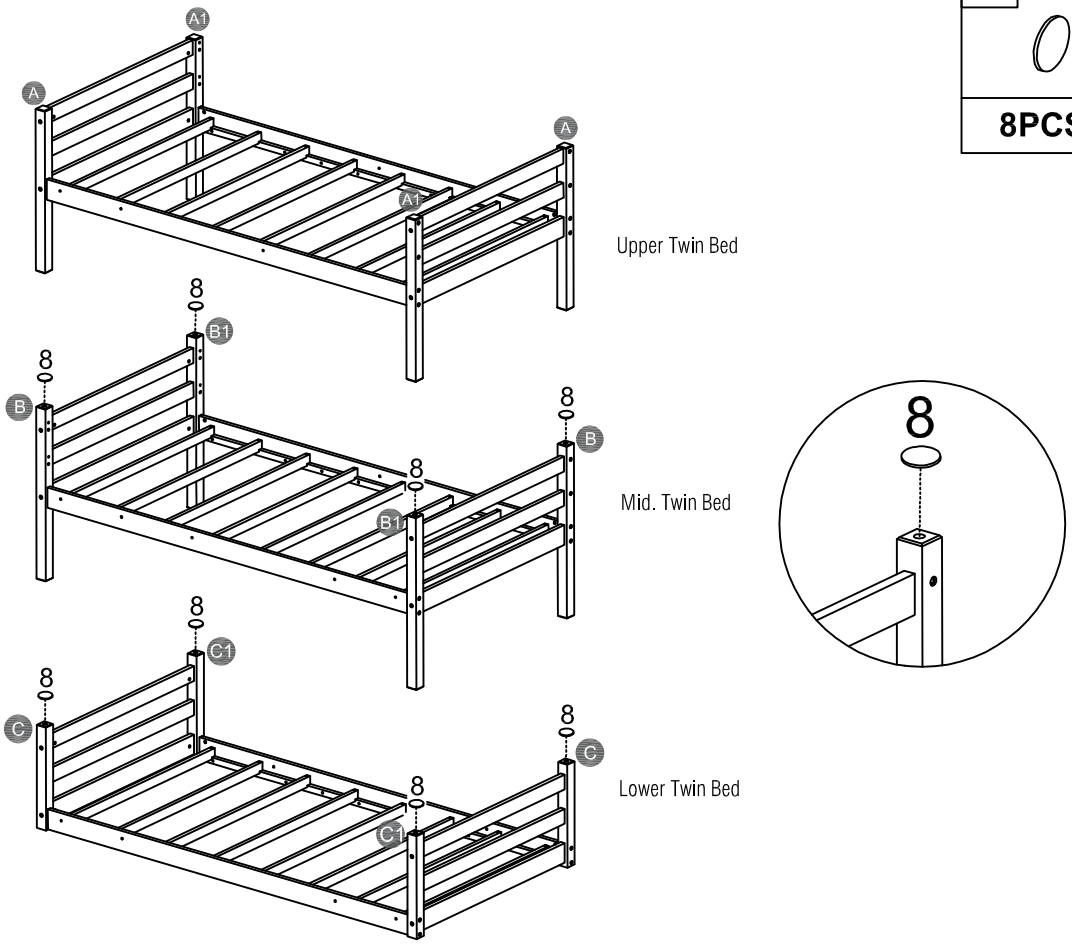
8
8PCS