Installation Guide

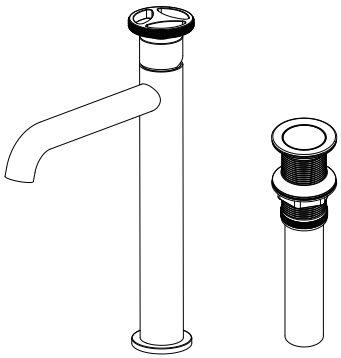

Before Installation

⚠ CAUTION

Failure to read these instructions prior to installation may result in personal injury, property damage, or product failure. Manufacturer assumes no responsibility for product failure due to improper installation.

STOP DO NOT RETURN TO STORE

If you have any trouble, contact us before reaching out to the retailer. we'll make it right. Our customer service team will be glad to assist you with any assembly, missing part or questions that you may have about your products.

PRIOR TO INSTALLATION

1- For best results, we recommends that this unit be installed by a licensed, professional plumber.
2- Please read over these instructions thoroughly before beginning installation. Make sure that you have all tools and supplies needed to complete the installation.
3- Please flush the water system to ensure that no metal swarf, solder, and other impurities can enter the faucet that might damage the cartirdge. (Most of the leakages and water flow issues are from avoilding this very necessary step).
4- Turn off the hot and cold water lines at the angle valve and turn on the old faucet to release any built-up pressure.
5- Keep this booklet and the receipt (or other proof of date and place of purchase) for this product in a safe place. The receipt is required should it be necessary to request warranty parts.
6- Please keep the box and packaging materials until your product is completely installed and functional.

Cleaning and Care

Clean the faucet often with a soft cloth to keep it looking like new. For heavy cleaning you can use mild liquid detergents or non-abrasive liquid polisher. Rinse with water and dry with a soft cloth. Avoid abrasive cleaners, steel wool and harsh chemicals as these will dull the finish and void your warranty.

Tools you may need


Plumbers Tape


Safety Glasses

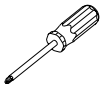
Phillips Screwdriver


Wrench

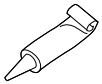
Silicone sealant

Dimensions

Critical dimensions show in mm

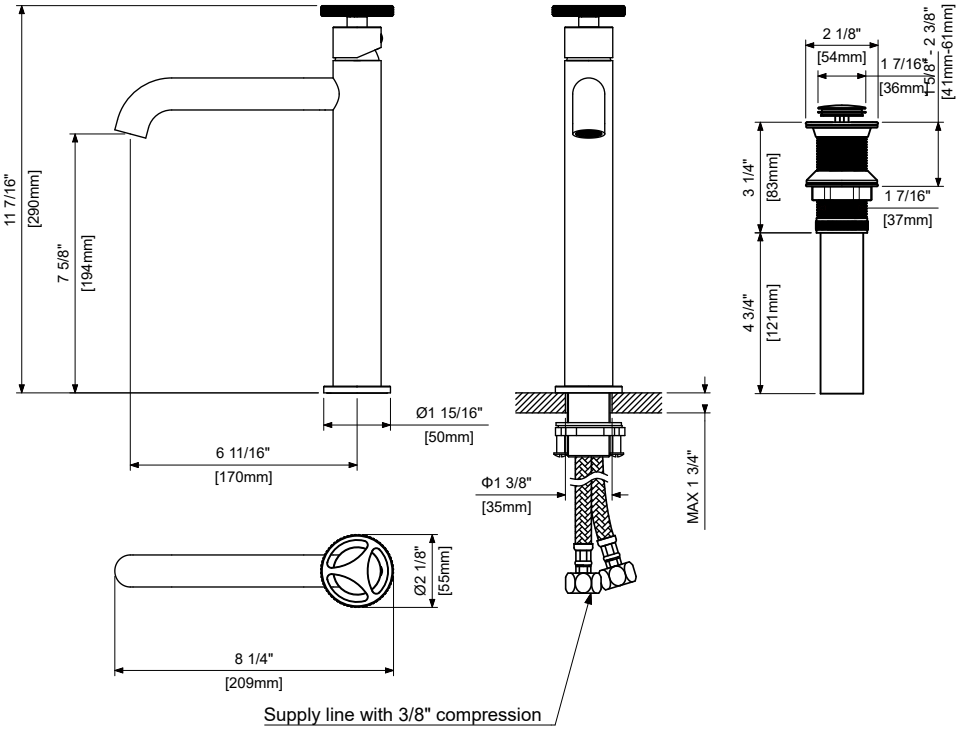

Parts List

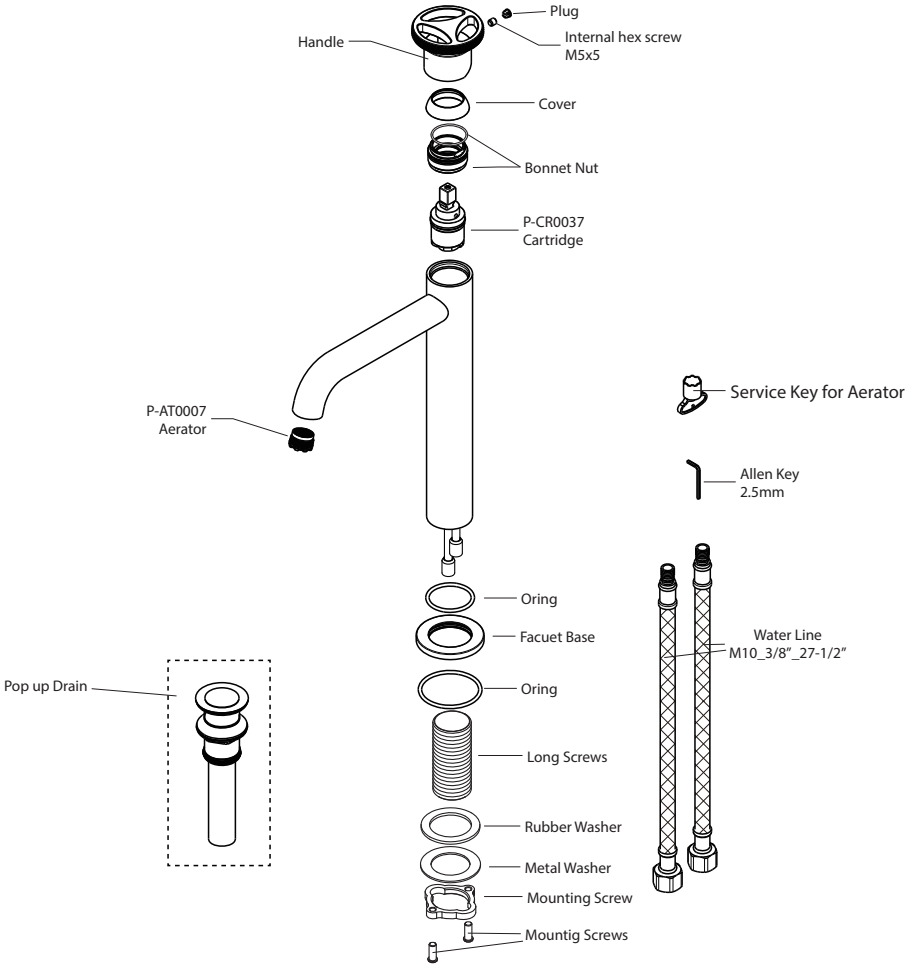
Plug
Handle
Internal hex screw
M5x5
Cover
Bonnet Nut
P-CR0037
Cartridge
P-AT0007
Aerator
Service Key for Aerator
Allen Key
2.5mm
Oring
Facuet Base
Oring
Water Line
M10_3/8"_27-1/2"
Pop up Drain
Long Screws
Rubber Washer
Metal Washer
Mounting Screw
Mountig Screws

Faucet Installation

1

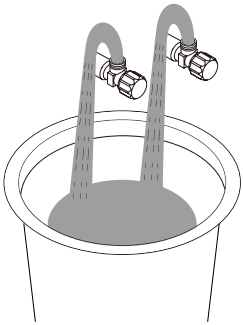

Shut off water suppliers. Remove the old faucet, clean the mounting surface.
Note: For first time install, flush the pipes first by open the angel valve to run 60s.

2

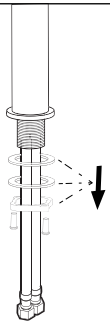

Remove the mounting hardware from the mounting pipe.

3

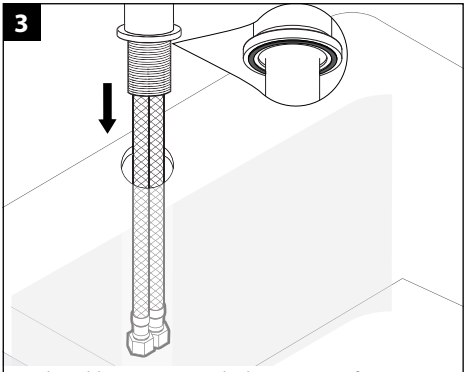

Put the rubber O-ring into the bottom gap of faucets then Insert faucet into faucet hole.

4

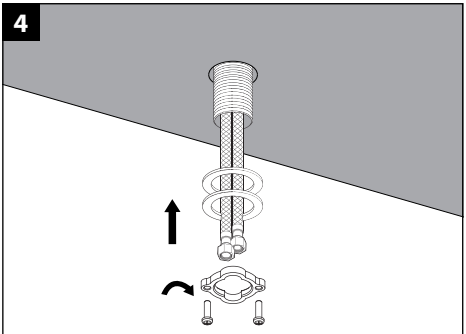

From below the sink, Slide rubber washer, metal washer and mounting bracket onto the thread shank.

5

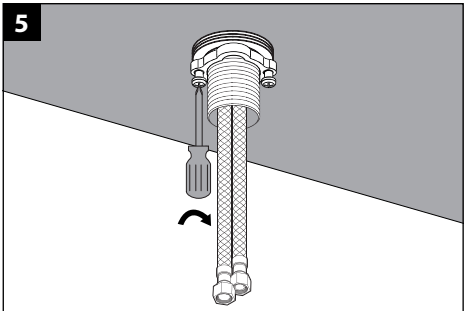

Adjust position of faucet body if necessary, Then tighten the mounting nuts with phillips screwdriver until snug.

6

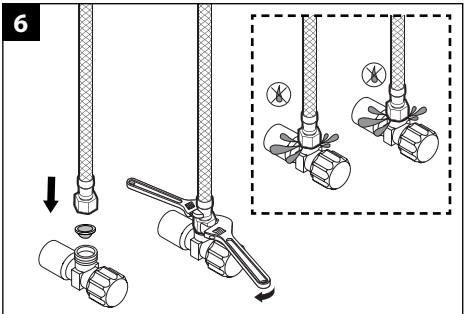

Connect and tighten the supply hoses by using two adjustable wrenches (avoid twisting or kinking). Turn on the angle valve and check for leaks.
Note: Do not remove the net filter that attached into the connecting end!

Pop-up drain Installation

1

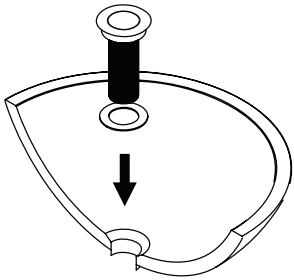

Remove all components from drain piece including: thin and thick silicone washer, hard washer, drain nut and tail piece.
Insert drain and thin silicone washer into basin. Apply Teflon to the exposed male threading area of drain piece.

2

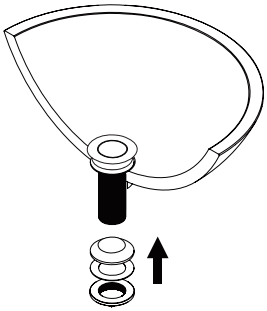

Insert thick silicone washer and hard washer over the exposed mail threaded area and screw drain nut onto drain. Do not overtighten.

3

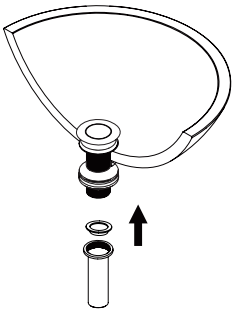

Screw tail piece onto drain using the tail washer.

4

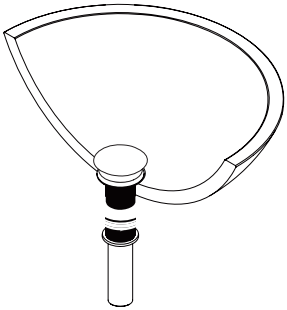

Install waste system (not included) and check for leakage.

Trouble-Shooting

If you've followed the instructions carefully and your faucet still does not work properly, take these corrective steps.

Problem	**Cause**	**Action**
Low flow	Aerator or fliter may be clogged	Unscrew aerator to check rubber packing or replace aerator. **(Note: some models require wrench to remove aerator.)**
Faucet leaks from under handle	Bonnet nut has come loose or cartridge needs to be reseated	Remove handle and cap. Using a wrench, ensure bonnet nut is tight.
Water will not shut off completely.	Dirty or worn out plastic washer in the cartridge.	Adjust or replace cartridge. **WARNING: Failure to securely tighten bonnet nut with a wrench could result in water damage.**

LIMITED LIFETIME WARRANTY

Thank you for choosing our faucets and accessories. We are dedicated to providing you with exceptional products that are built to last. We are proud to offer a comprehensive limited lifetime warranty on our kitchen and bathroom faucets and accessories. Here are the details of our warranty policy:

We warrant the structure and finish of the faucets and accessories to be free from defects in material and workmanship under normal usage for as long as the original purchaser resides in the residence in which the product was first installed. Additionally, the following warranty periods apply to specific components:

• Sprayhead Assembly: We warrant the sprayhead assembly, including the engine, aerators, structure, restrictors, backflow preventers, sprayer hoses, and braided supply line hoses (nylon, silicon, and stainless steel), to be free from defects in material and workmanship under normal usage for a period of one (1) year from the date of purchase.

• Cartridge: We warrant the faucet's cartridge to be free from defects in material and workmanship under normal usage for a period of five (5) years from the date of purchase.