HALF MOON PATIO SOFA

Instruction Manual

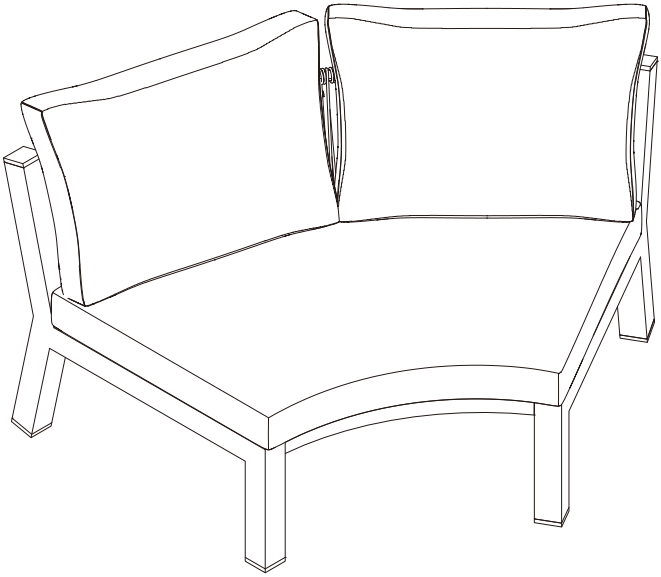

- Excellent weather resistance
- Easy to clean and maintain

Instruction Manual

ASSEMBLYINSTRUCTIONS:

· Our clear, easy-to-follow, step-by-step instructions will guide you through the project from start to finish.

· Do not skip any steps. It is of utmost importance to assemble all of the parts according to the directions.

· Item identi cation: For ease of identi cation, all parts are labeled to correspond to the step number in which the part is used.

IMPORTANT:

· Read following instructions carefully before using the chair.

· Be aware that some parts are heavy and have sharp edges.

· Do not overtighten screws (Insert all screws before tighten screws).

· Firmly secure all bolts, screws and nuts before use.

· Please do not exceed the weight limitations of this item.

· Recon rm that all bolts, screws, and nuts are secure every 90 days.

CARE &SAFETY:

· Always use on rm level ground.

· Keep all children and pets away from assembly area. Children and pets should be supervised while the product is being assembled.

· The assembled product should be located at least 6 feet (2m) from any obstruction such as fence, garage, house, overhanging branches, laundry lines or electrical wires.

· Do not use or store this item in the proximity of open flame or flammable/-combustible chemicals.

· In case of fire, do not attempt to extinguish any burning polypropylene with water.

· Please contact Customer Service if you have any problems or discover any missing parts.

Care & Maintenance

Do not clean furniture with harsh cleansers or polish, avoid using steel wool to clean the furniture.

To obtain the longest lifespan of your outdoor products, minimizing exposure to direct sunlight is recommended.

Children should not climb or jump on the furniture.

To obtain the longest lifespan of your outdoor products, avoid extended and lengthy exposure to rain and snow.Whenever possible cover the product and /or place under patio or awnings.

Stains may be removed with mild soap solution and damp cloth.

Keep away from sources of ignition.

Dust and pick-up spills using a clean,non-colored, lint-free cloth.

Do not use sharp objects on the product surface.

ASSEMBLY PARTS

A 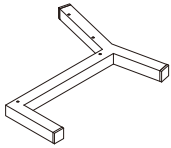	B 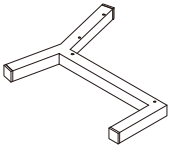	C 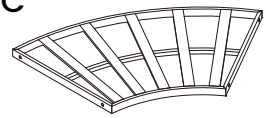
Right Leg: 1pc	Left Leg: 1pc	Seat Panel: 1pc
D	E 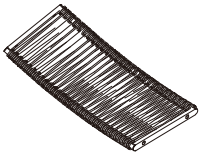	F 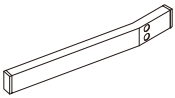
Right Backrest: 1pc	Left Backrest: 1pc	Center Leg: 1pc
G	H 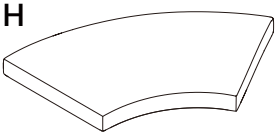	I 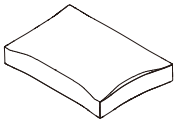
Snap Clip: 2 pcs	Seat Cushion: 1pc	Back Cushion: 2 pcs

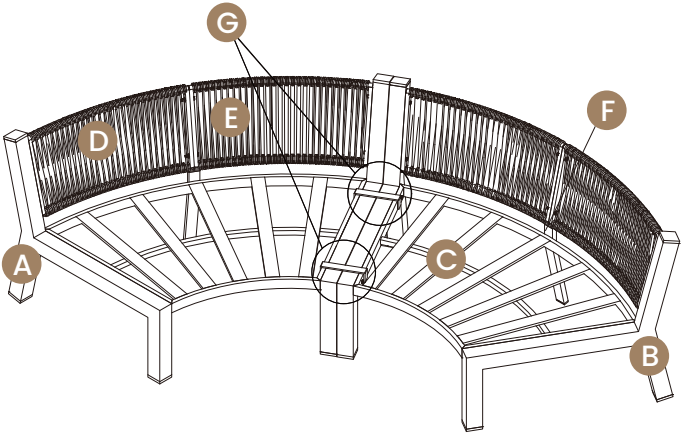

ASSEMBLY PARTS

① 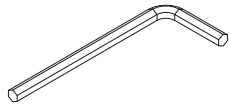	② 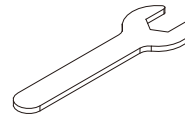	③
4MM Allen Wrench: 1 pc	Wrench: 1 pc	M6*35 Screws: 10 pcs
④	⑤	⑥
M6*45 Screws: 2 pcs	Washers: 6 pcs	Nuts: 2 pcs

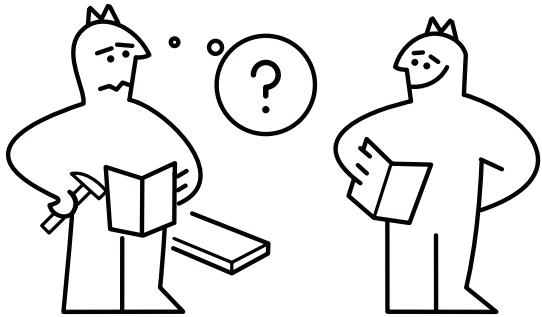

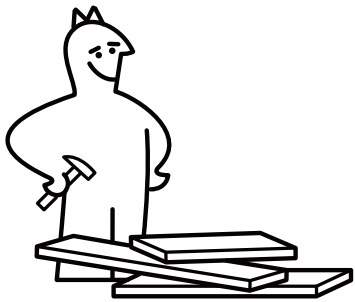

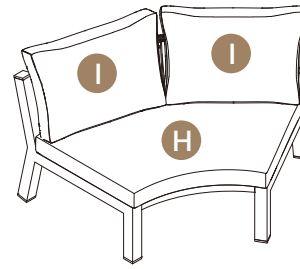

Step 1

Align the two backrests (E and D) at the attachment point. Install washers (⑤) on both sides, then secure with a nut (⑥) on the left and an M6x45 screw (④) on the right - ensuring proper hole alignment. Tighten using a wrench (②) on the left and an Allen wrench (①) on the right.

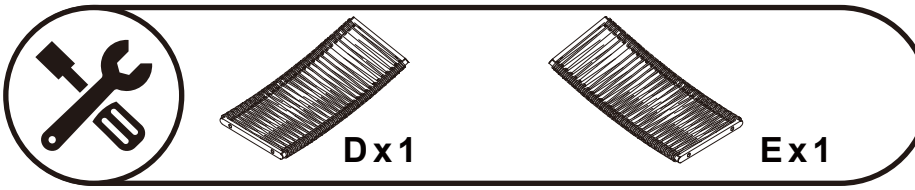

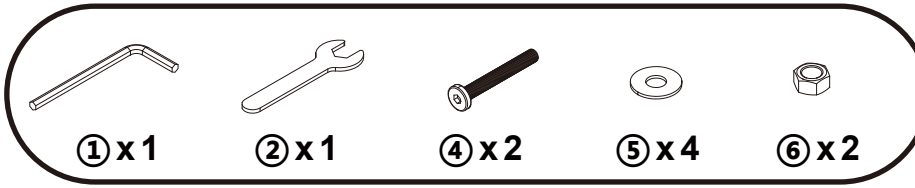

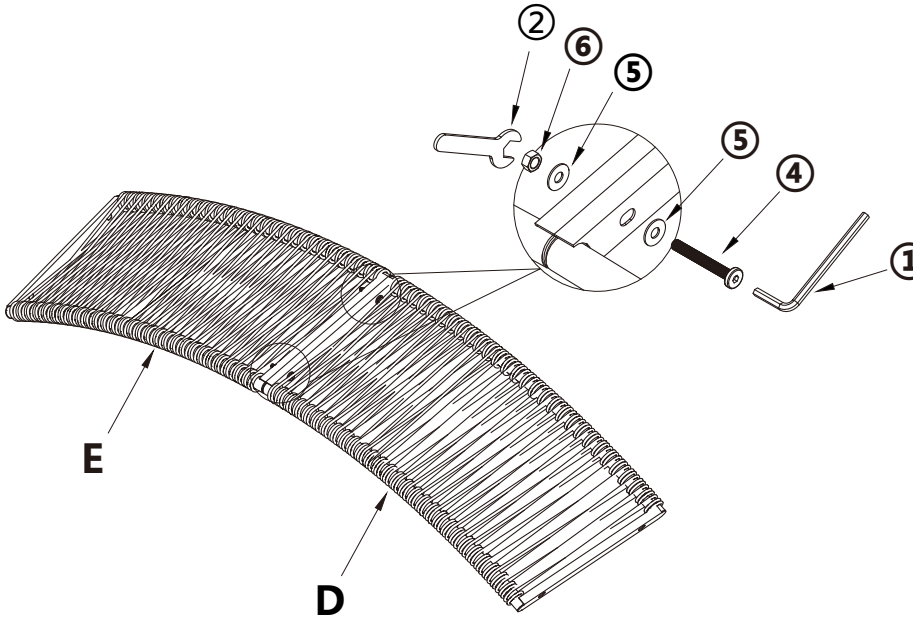

Step 2

Place the right leg (A) on the floor. Align the seat panel (C) with the lower plug and secure it using M6x35 screws (③) with a 4mm Allen wrench (①).

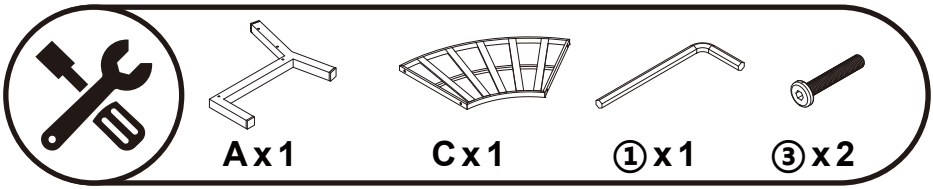

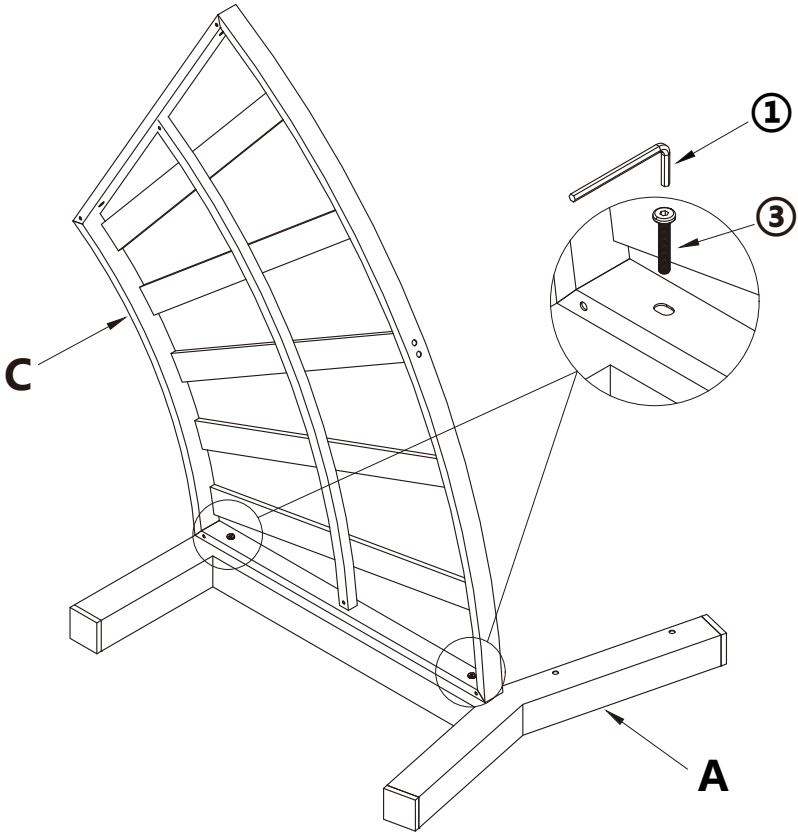

Step 3

Align the left leg (B) with the opposite side. Insert the M6x35 screws (③) upward through the holes, then tighten them with the 4mm Allen wrench (①).

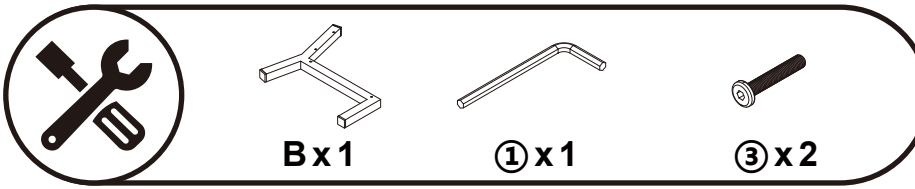

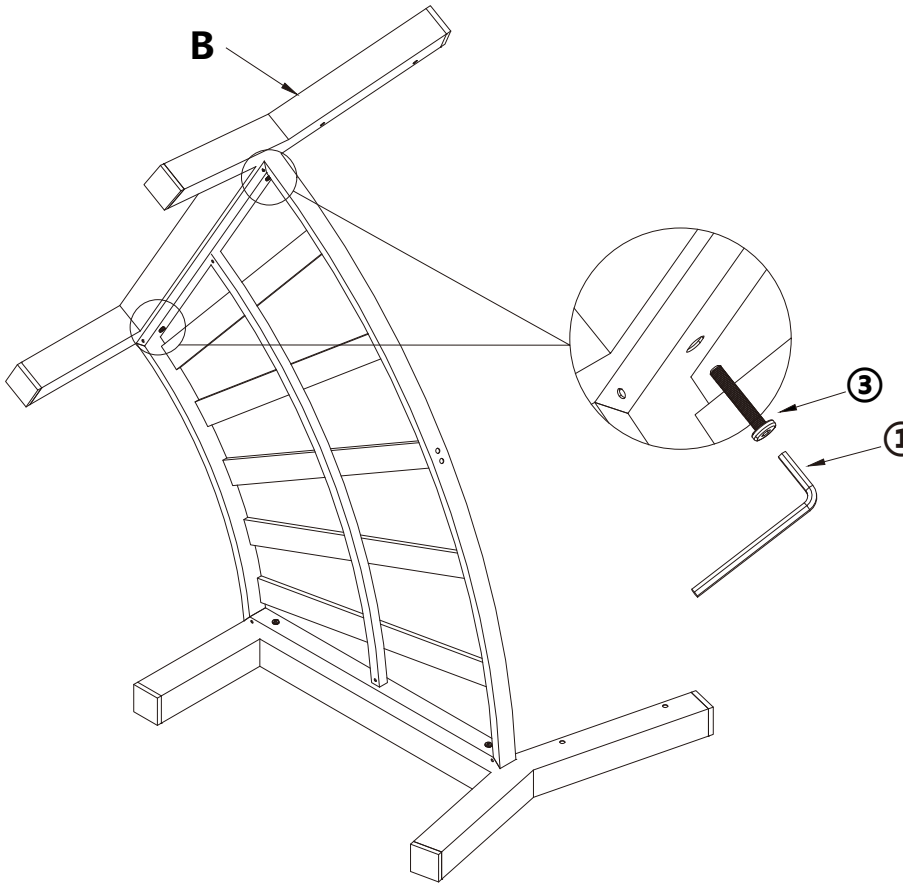

Step 4

Attach the center leg (F) to the seat panel (C), align the holes, then add washers (⑤) and install M6x35 screws (③). Tighten with the Allen wrench (①).

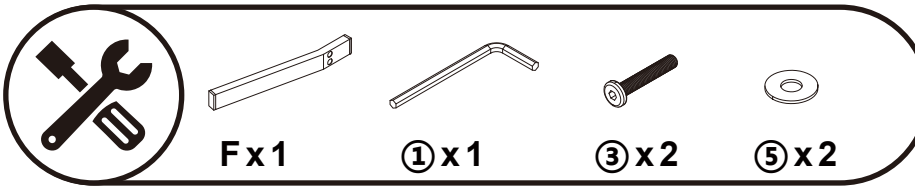

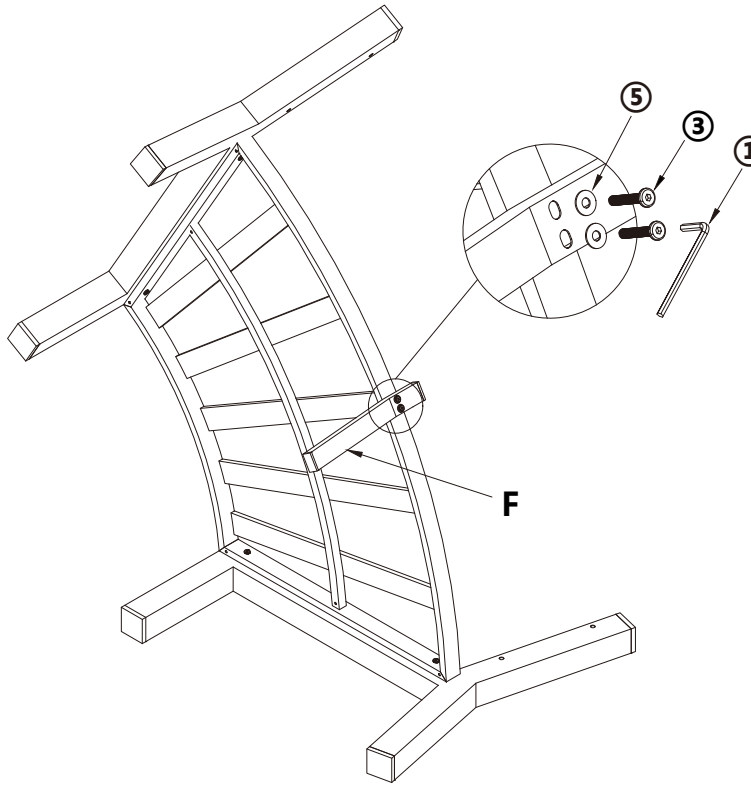

Step 5

Install the backrest to the legs, insert four M6×35 screws(③) at each corner of the backrest and tighten them with the Allen wrench(①).

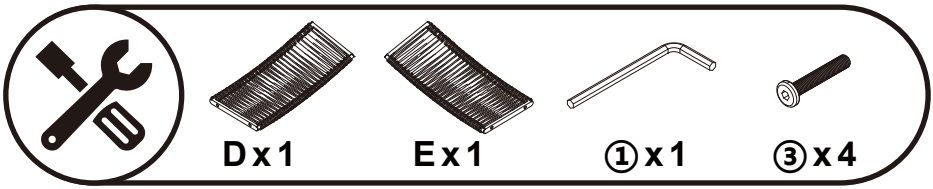

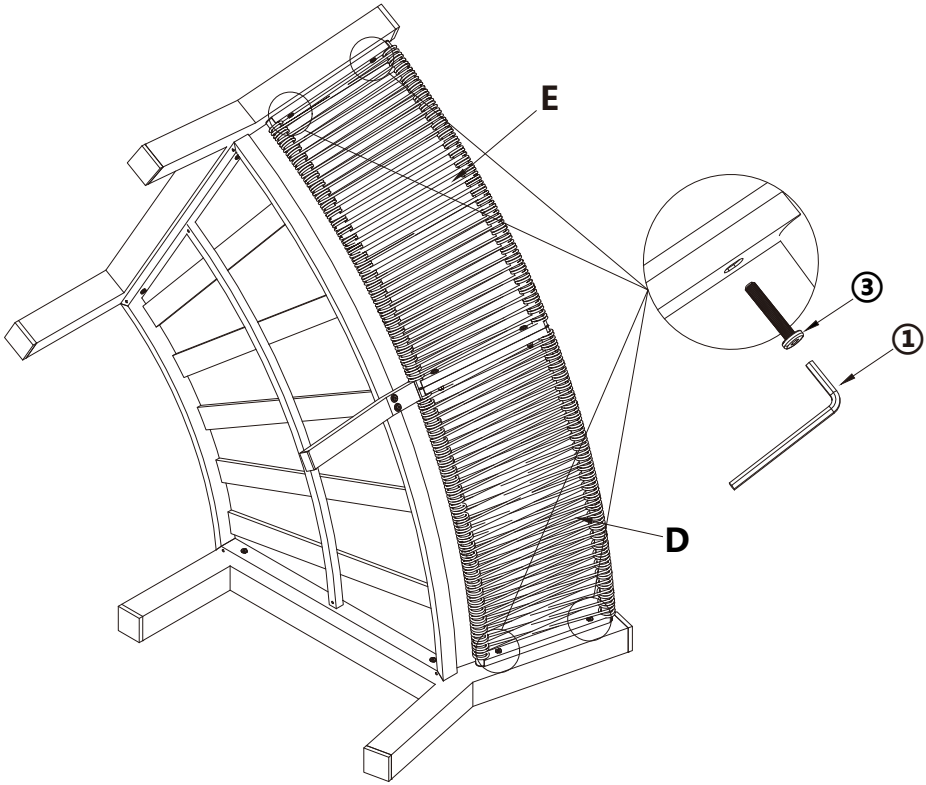

Step 6

Find the connection point under the sofa and secure it with the snap clip (G).

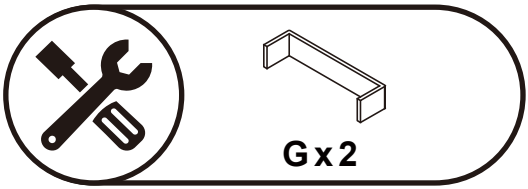

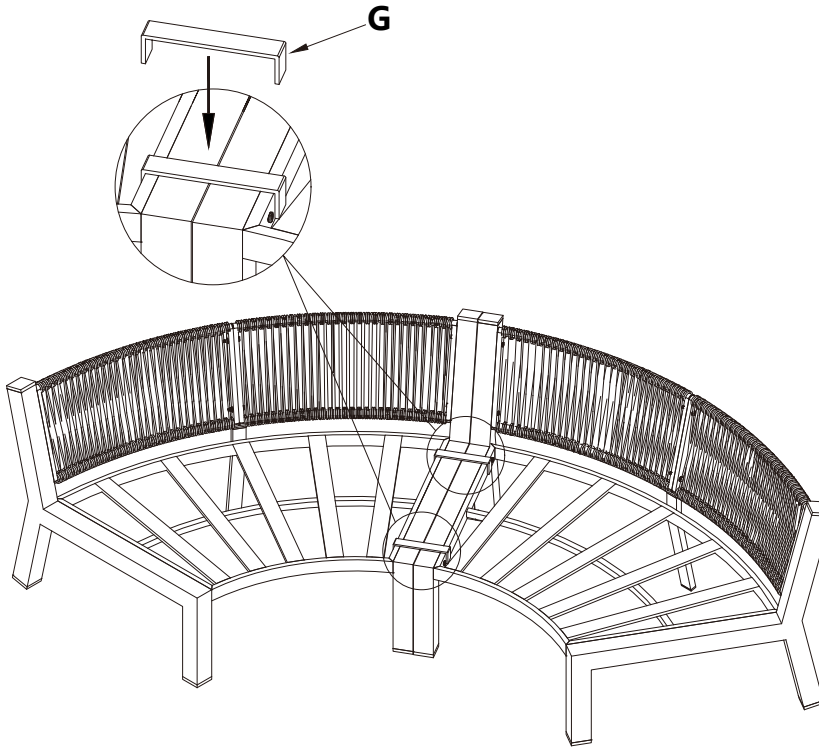

Step 7

Place the sofa upright and put the seat cushions (H) and back cushions (I).

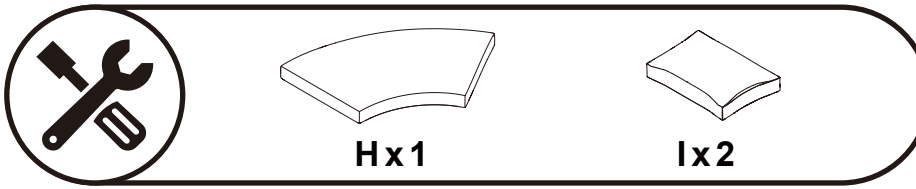

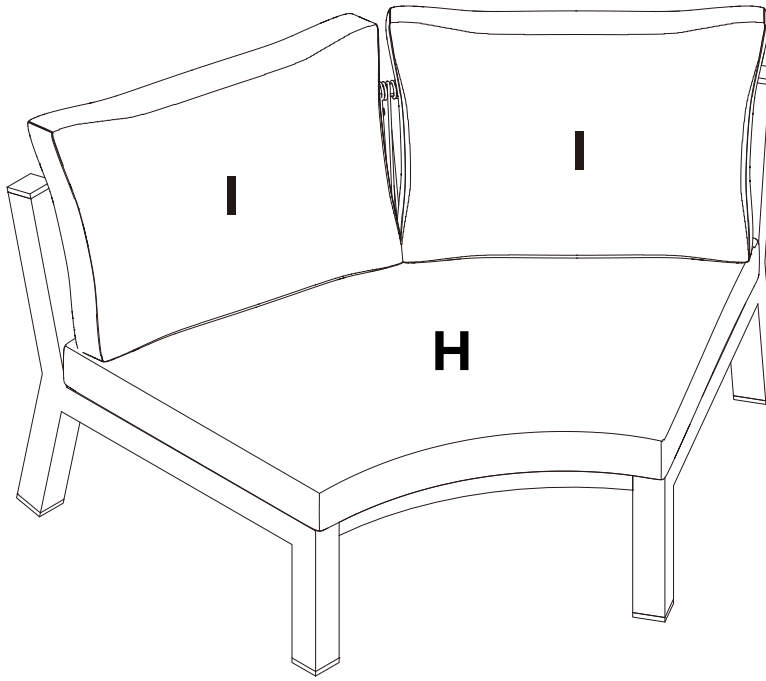

PAY ATTENTION

DO NOT EXCEED THE MAXIMUM LOAD OF *400 LBS*

DONE !

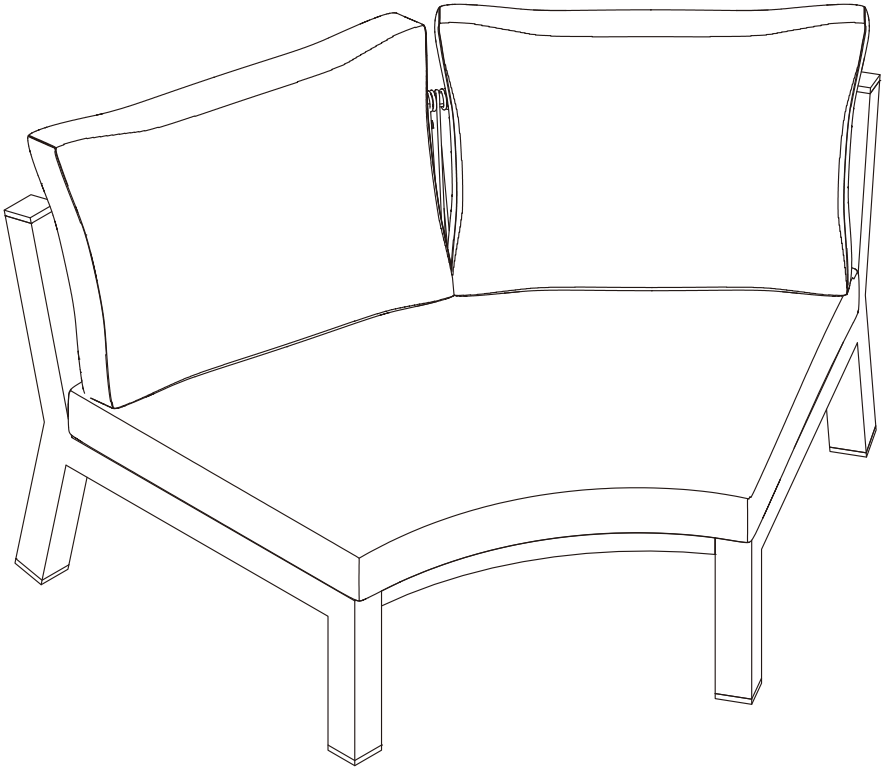

*Due to transportation, the cushion may be slightly compressed and the surface fabric may have creases. It will take time to recover, but gently tapping it can speed up the rebound.

WARRANTY

Half Moon Patio Sofa
3-year basic Warranty Program

- We offers a 3-year basic warranty on the entire chair from the date of purchase against defects in material and workmanship. During this period we will repair and replace, at our discretion the defective component.

- This warranty does not apply to improperly installed, handled, abused, damaged by user error, nor to any unit which has been repaired or altered by unauthorized repair companies.

- Under no circumstances will the customer entitled warranty to consequential or incidental damages. This limited 3-year basic warranty will only grant customers certain legal rights; customers may have other rights according to different state laws.

HOW TO CONTACT US

Step 1:

Log in to your account.

Step 2:

Go to Your Orders. Select the item you purchased from us.

Step 3:
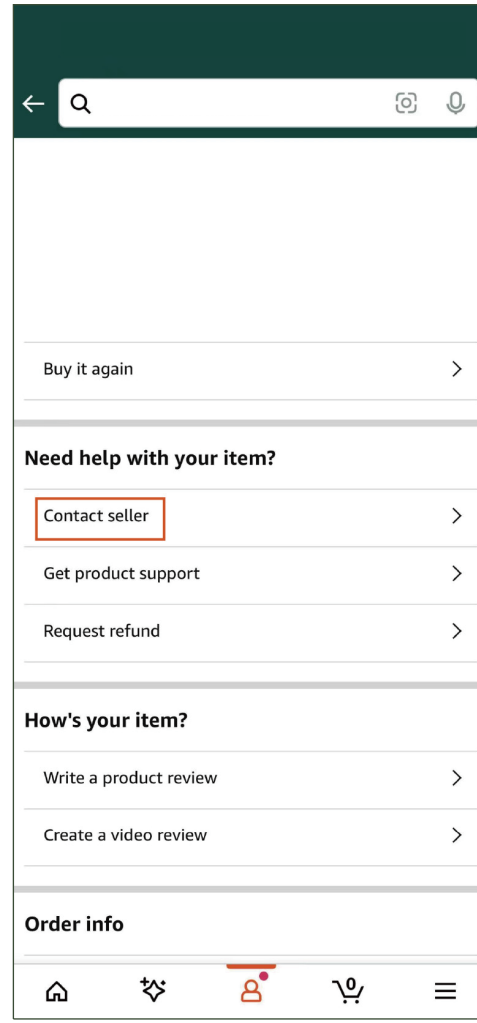
Select Contact seller.