Six-drawer dresser

Assembly instructions

Two people required for assembly

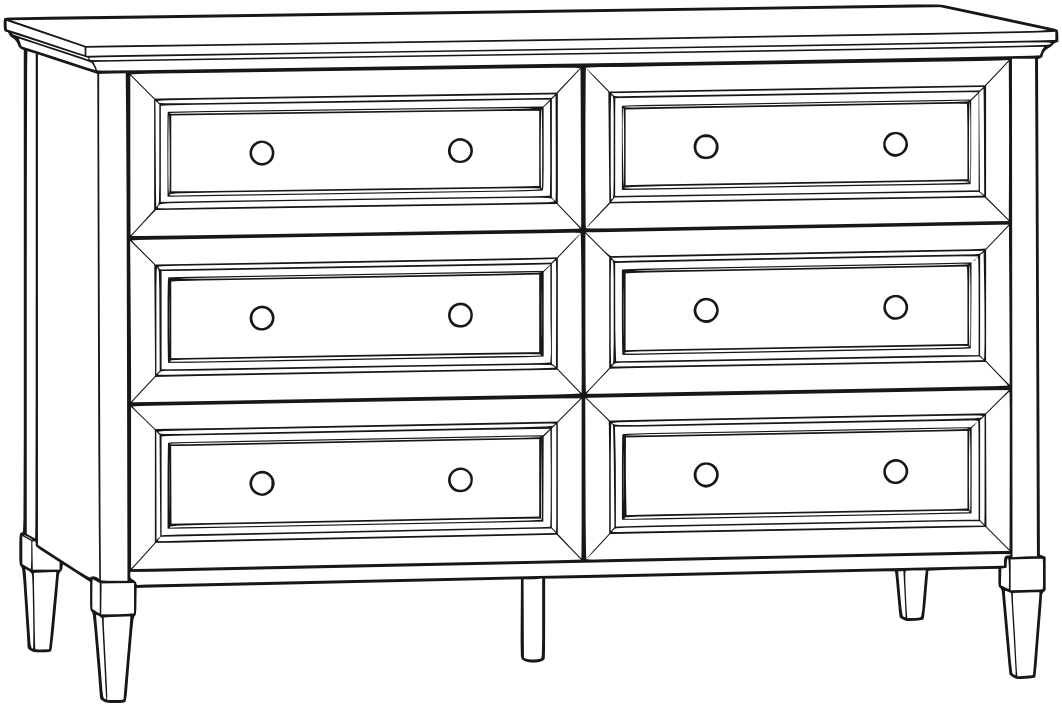

Assembly sequence

Before you begin	Parts, hardware and cam locks	**pp. 2–4**
Steps 1–4	Build the drawers and fit the rails	**pp. 5–8**
Steps 5–9	Assemble the cabinet	**pp. 9–13**
Steps 10–12	Fit the back and drawers, then anchor the dresser	**pp. 14–16**

WARNING • TIP-OVER HAZARD

Anchor the dresser to the wall before loading or using it. Never let children climb on the dresser or hang from the drawers.

Check the parts

Match the numbers on the pieces to the drawings below. Count each group before assembly and set aside the left and right drawer fronts separately.

1 Qty 6

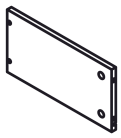

Left drawer side

2 Qty 6

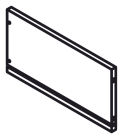

Right drawer side

3 Qty 6

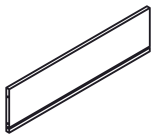

Drawer back

4 Qty 6

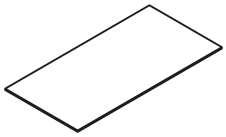

Drawer bottom

5 Qty 3

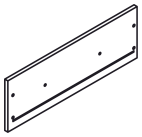

Left drawer front

6 Qty 3

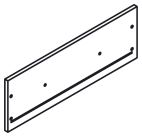

Right drawer front

7 Qty 1

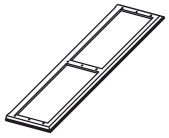

Top frame

8 Qty 1

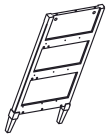

Left cabinet side

9 Qty 1

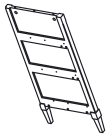

Right cabinet side

10 Qty 1

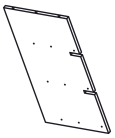

Center divider

11 Qty 2

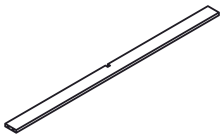

Crosspiece

12 Qty 1

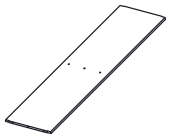

Bottom panel

13 Qty 1

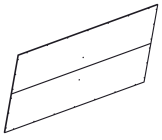

Back panel

14 Qty 1

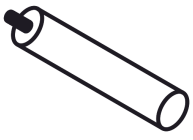

Center support leg

DRAWER FRONTS

Facing the assembled dresser, part 5 goes in the left column and part 6 goes in the right. Keep all six fronts labeled until Step 11.

Sort the hardware

Match the letters and quantities before opening the packets. Keep the slide screws (I) and back-panel screws (J) in separate containers.

A Qty 38

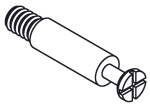

Cam bolt

B Qty 38



Cam lock

C Qty 10



Wood dowel
8 × 30 mm

D Qty 2



Hex-socket bolt
1/4" × 1 1/8"

E Qty 1



Hex key

F Qty 24



Flat-head screw
4 × 25 mm

G Qty 12



Knob

H Qty 12

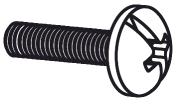

Machine screw
5/32" × 5/8"

I Qty 48



Wood screw
3 × 12 mm

J Qty 28

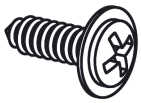

Back-panel screw
3 × 12 mm

K Qty 1



Wall safety strap

L Qty 1



Plastic wall anchor

M Qty 1



Mounting screw
4 × 38 mm

N Qty 1



Washer

CL Qty 6

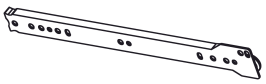

Left cabinet slide

DL Qty 6



Left drawer slide

CR Qty 6



Right cabinet slide

DR Qty 6

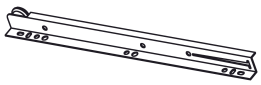

Right drawer slide

Before you build

Check all parts for damage. If a part is missing or damaged, contact the seller for a replacement before starting assembly.

Tools

Have a Phillips screwdriver ready. The hex key (E) is included. Depending on the wall fixing, you may also need a drill or hammer. Supply those tools yourself.

How a cam joint works

The open side of cam lock B must face the incoming head of bolt A. Some steps fit the cams before the panels are joined.

1 Seat the cam bolt

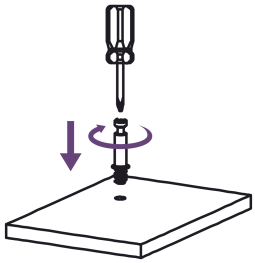

Thread bolt A into its pilot hole until the shoulder meets the panel.

2 Bring the panels together

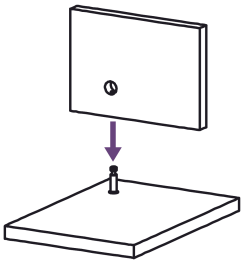

Guide the edge hole over the bolt head. Bring the two panel faces together.

3 Aim the cam opening

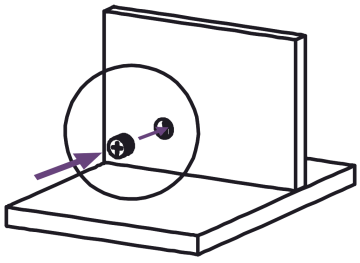

Insert cam lock B into the round recess. Point its opening toward the bolt.

4 Lock the joint

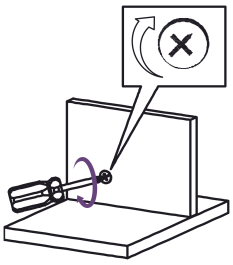

Turn B with a Phillips screwdriver until the panels are held together.

STEP 1 OF 12

Prepare all rails and build three left drawers

PARTS 1 × 6, 2 × 6, 3 × 3, 4 × 3, 5 × 3

HARDWARE DL × 6, DR × 6, I × 24, F × 12, A × 12, B × 12, G × 6, H × 6

1. Prepare all six pairs of drawer sides. Fit DL to the outside bottom edge of each side 1 and DR to each side 2. Point the rollers toward the back. Use two I screws per rail.
2. Use three prepared pairs now. Join sides 1 and 2 to back 3 with four F screws per box, then slide bottom 4 into the grooves.
3. Fit four A bolts to front 5 and four B cam locks to the drawer sides. Point the cam openings toward the bolts, seat the front, then turn each cam to lock.
4. Fasten two G knobs to each front with H screws from inside. Set aside the three remaining pairs of rail-equipped sides for Step 2.

Match DL to side 1 6 sides

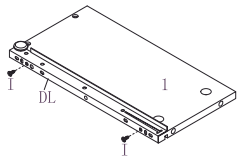

Match DR to side 2 6 sides

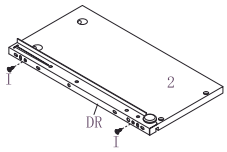

Join sides 1 + 2 to back 3 3 boxes

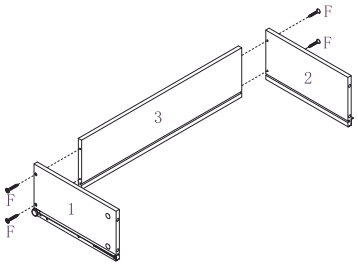

Slide bottom 4 into the grooves 3 boxes

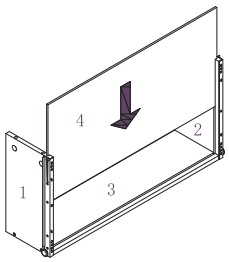

Fit drawer front 5 3 fronts

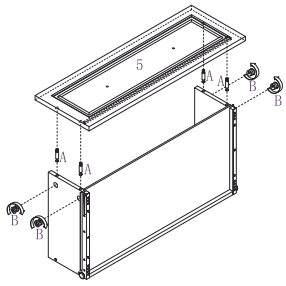

Fit two knobs to each front 3 drawers

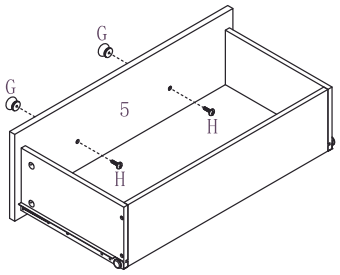

BEFORE YOU CONTINUE

Three drawers have front 5. Three pairs of rail-equipped sides remain.

STEP 2 OF 12

Build three right drawers

PARTS 1 × 3 and 2 × 3 (prepared), 3 × 3, 4 × 3, 6 × 3

HARDWARE F × 12, A × 12, B × 12, G × 6, H × 6

1. Use the three pairs of drawer sides 1 and 2 prepared in Step 1. Join each pair to back 3 with four F screws.
2. Slide bottom 4 into the grooves. Fit four A bolts to front 6 and four B cam locks to the side panels.
3. Point the cam openings toward the bolts, seat the front over the bottom edge and turn each cam to lock. Attach two G knobs to each front with H screws from inside.

Join sides 1 + 2 to back 3 3 boxes

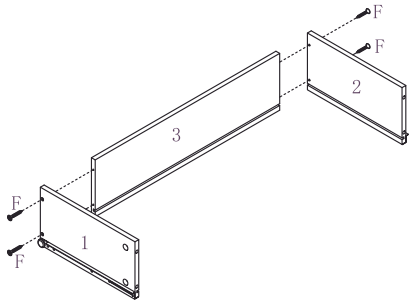

Slide bottom 4 into the grooves 3 boxes

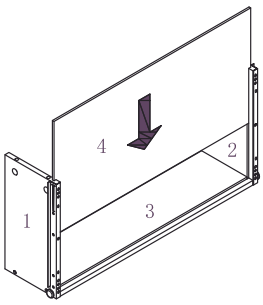

Fit drawer front 6 3 fronts

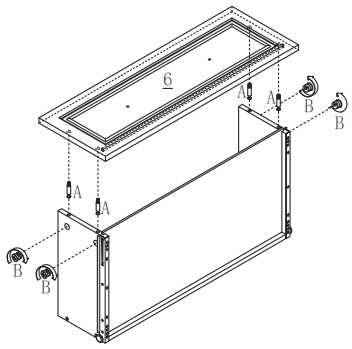

Fit two knobs to each front 3 drawers

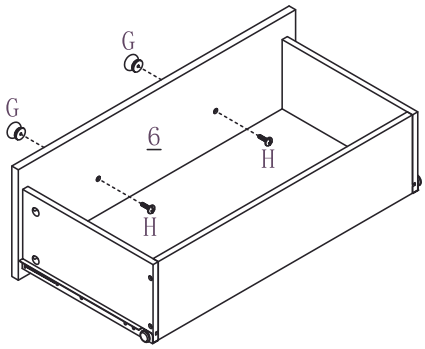

BEFORE YOU CONTINUE

You now have three drawers with front 5 and three with front 6.

STEP 3 OF 12

Fit rails to the cabinet sides

PARTS 8 × 1, 9 × 1

HARDWARE CL × 3, CR × 3, I × 12

1. Lay left side 8 and right side 9 with their inside faces up. Place three CL rails on 8 and three CR rails on 9.
2. Point all rollers toward the front edge of the cabinet. Align the two screw positions shown in the rail detail with the pilot holes.
3. Fasten each rail with two I screws. The inside faces with the rails will face the drawers.

CL • left cabinet rail Screw positions

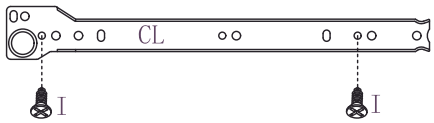

CR • right cabinet rail Screw positions



Panel 8 • left side 3 CL rails

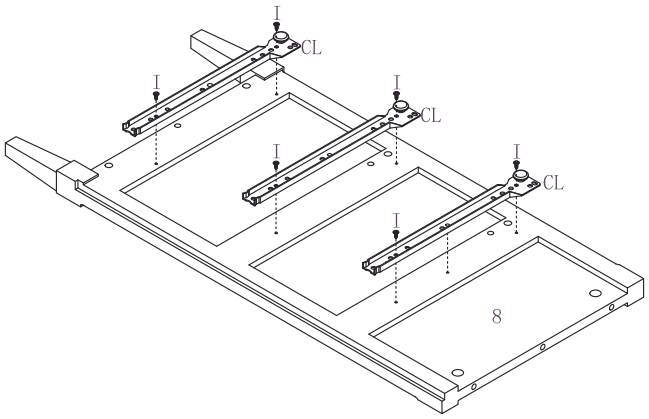

Panel 9 • right side 3 CR rails

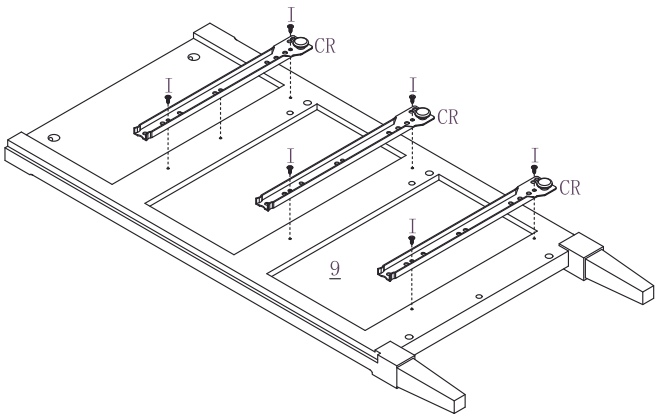

BEFORE YOU CONTINUE

Panel 8 has three CL rails and panel 9 has three CR rails.

STEP 4 OF 12

Fit rails to both faces of the divider

PARTS 10 × 1

HARDWARE CR × 3, CL × 3, I × 12

1. Lay center divider 10 as shown for Face 1. Fit three CR rails to the pilot holes with two I screws per rail.
2. Turn the divider over. Fit three CL rails to the opposite face, again using two I screws per rail.
3. Use the illustrated screw positions and keep all six rollers at the same front edge.

CL • left cabinet rail Screw positions

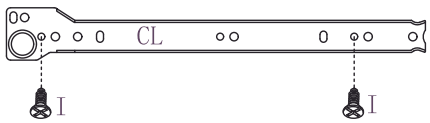

CR • right cabinet rail Screw positions



Face 1 • mount CR rails 3 CR rails

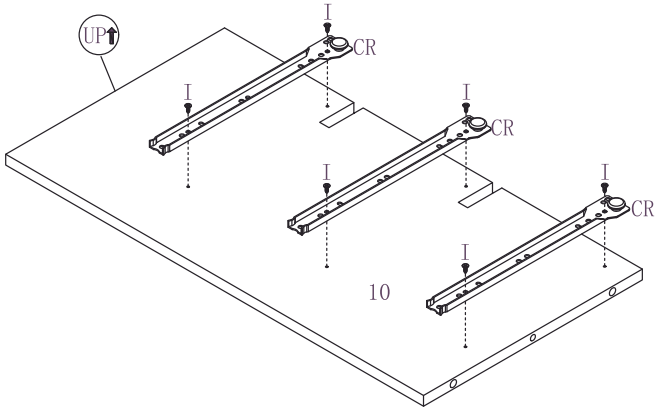

Face 2 • flip and fit CL rails 3 CL rails

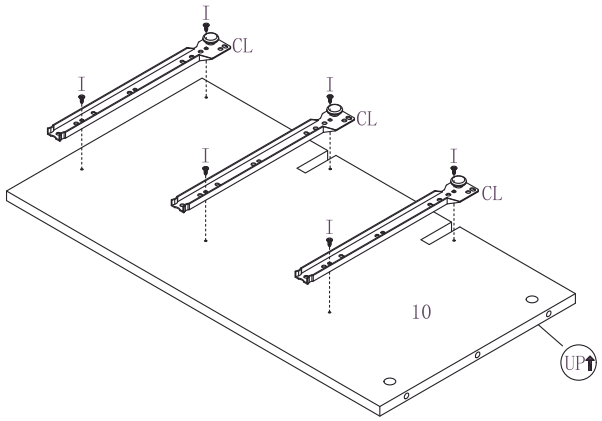

BEFORE YOU CONTINUE

Each face has three rails, and all six rollers face the same edge.

STEP 5 OF 12

Join the divider to the bottom panel

PARTS 10 and 12

HARDWARE C × 1 · D × 2 · hex key E

1. Fit one wooden dowel C into the center hole on the joining edge of divider 10.
2. Align that edge with the three holes at the center of bottom panel 12. Insert both bolts D from the outer face of panel 12 and tighten with hex key E.

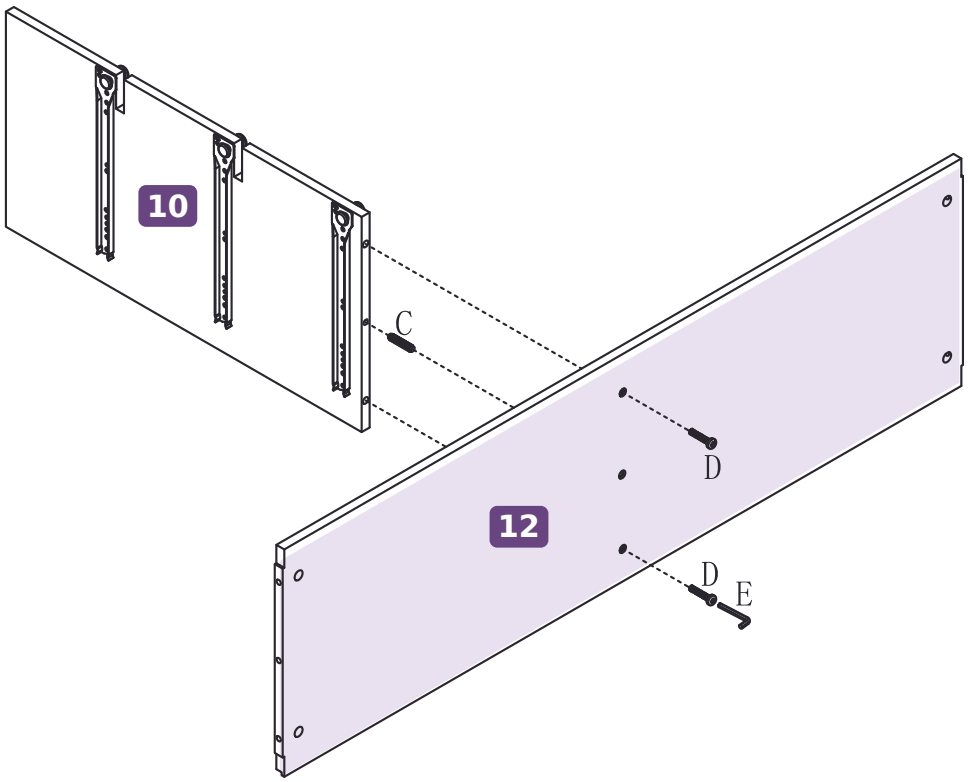

Center joint

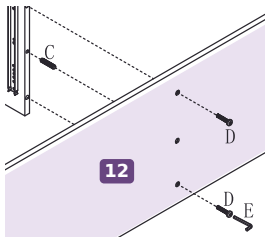

BEFORE YOU CONTINUE

The divider sits square to the bottom panel, with no gap at the joint.

STEP 6 OF 12

Seat the two crosspieces

PARTS 11 × 2 and divider assembly

HARDWARE No additional hardware

1. Find the two notches in divider 10 and the matching notch in each crosspiece 11.
2. Slide the notch in each crosspiece over its matching notch in the divider. Press the boards together until both joints seat fully.

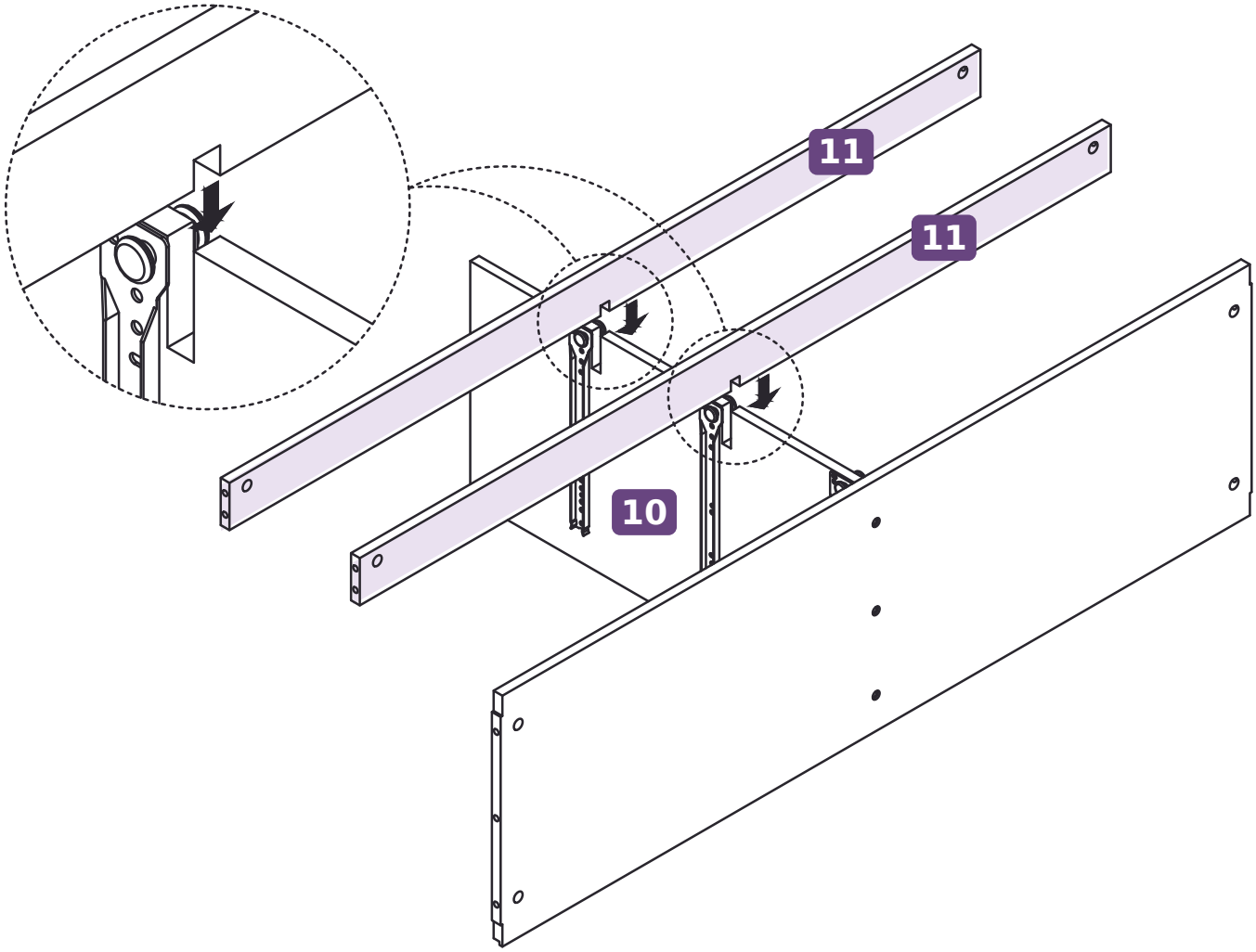

BEFORE YOU CONTINUE

The crosspieces are parallel. Both extend across the divider, as shown.

STEP 7 OF 12

Attach the left side panel

PARTS 8 and cabinet assembly

HARDWARE A × 4 · B × 4 · C × 3

1. Install four cam bolts A in the marked holes of side 8. Place one dowel C at each crosspiece joint and one at the bottom-panel joint.
2. Insert four cam locks B into the large face holes in crosspieces 11 and bottom panel 12. Face each opening toward its incoming bolt.
3. With the runners on panel 8 facing the divider, bring the panel straight onto the three joining ends. Seat the joints and turn the cams to lock.

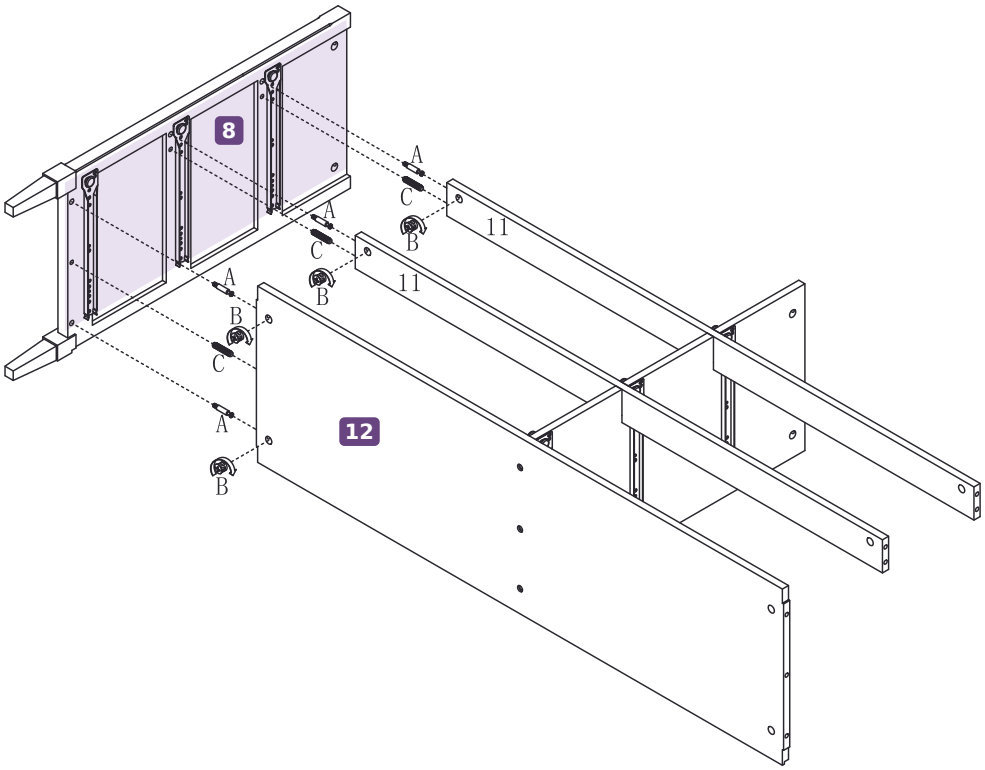

Crosspiece joint

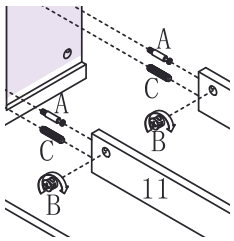

BEFORE YOU CONTINUE

The side panel sits flush against the bottom panel and both crosspieces.

STEP 8 OF 12

Fit the right side and center leg

PARTS 9 and 14 + cabinet assembly

HARDWARE A × 4 · B × 4 · C × 3

1. Prepare right side panel 9 and the opposite ends of the crosspieces and bottom panel with four bolts A, four cams B and three dowels C, as in Step 7.
2. Bring panel 9 into place with its runners facing the divider. Seat the joints, then turn the cams to lock.
3. Thread support leg 14 into the remaining center hole on the underside of bottom panel 12. Turn by hand until seated.

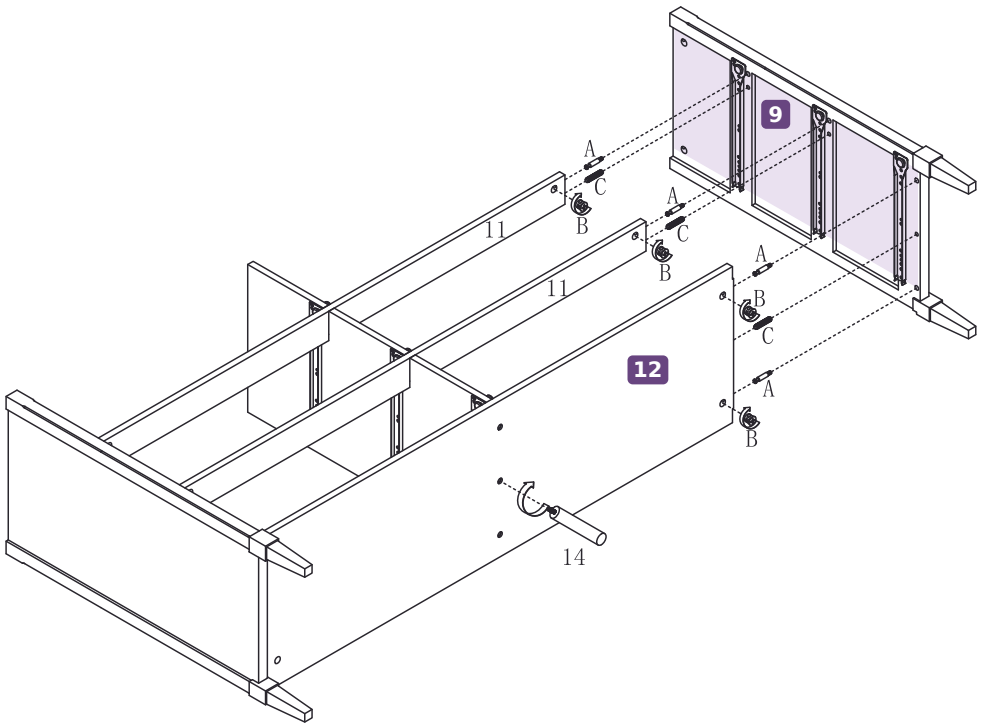

Support leg

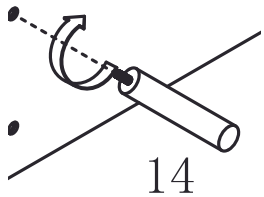

BEFORE YOU CONTINUE

Both side panels face inward at the runners, and the center leg is secure.

STEP 9 OF 12

Fit and lock the top

PARTS 7 · 8 · 9 · 10

HARDWARE A × 6 · B × 6 · C × 3

1. With your helper, lift the frame upright onto its feet. Fit two A bolts to the underside of top 7 above each upright. Insert one C dowel into the top edge of each upright (8, 10 and 9).
2. Fit two B cam locks in the side holes of each upright, with the cam openings facing the incoming bolts.
3. With a second person, lower top 7 straight onto all three uprights. Once it sits flush, turn the six cams to lock the bolts.

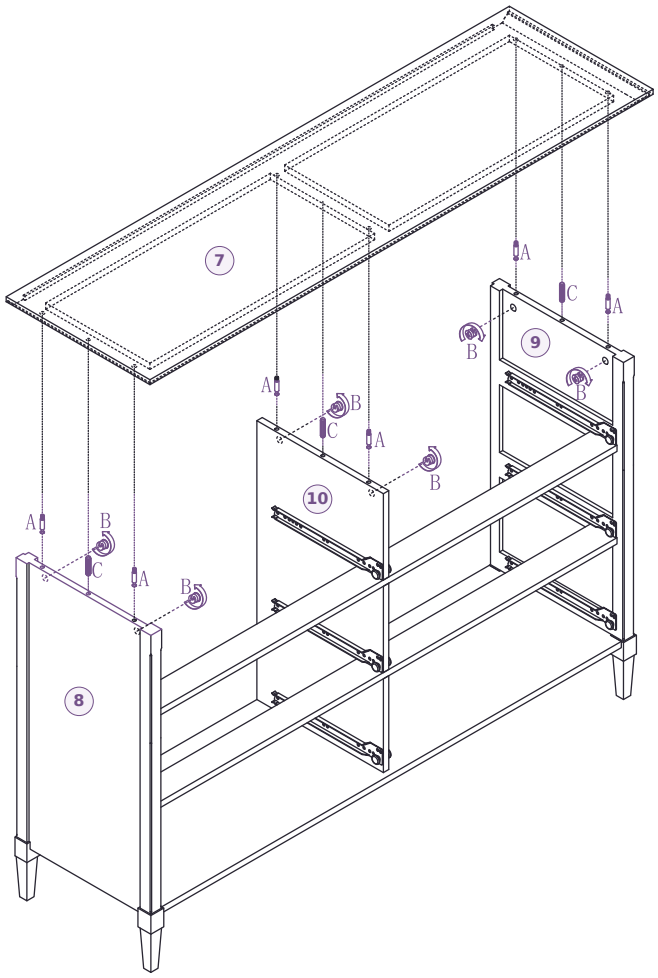

Each upright

Panels 8, 10 and 9



A × 2
Cam bolts



B × 2
Cam locks



C × 1
Wood dowel

BEFORE YOU CONTINUE

Check all three joints. The top should sit evenly on both sides and the center divider.

STEP 10 OF 12

Attach the back and the strap

PARTS 13

HARDWARE J × 28 · K × 1

1. Align back panel 13 with the cabinet's rear edges and center divider.
2. At the upper center, pass one J screw through one end of strap K and the back panel into the frame. Leave the free end accessible.
3. Fasten the remaining J screws at the locations shown along the perimeter and down the center. Use 28 J screws in total.

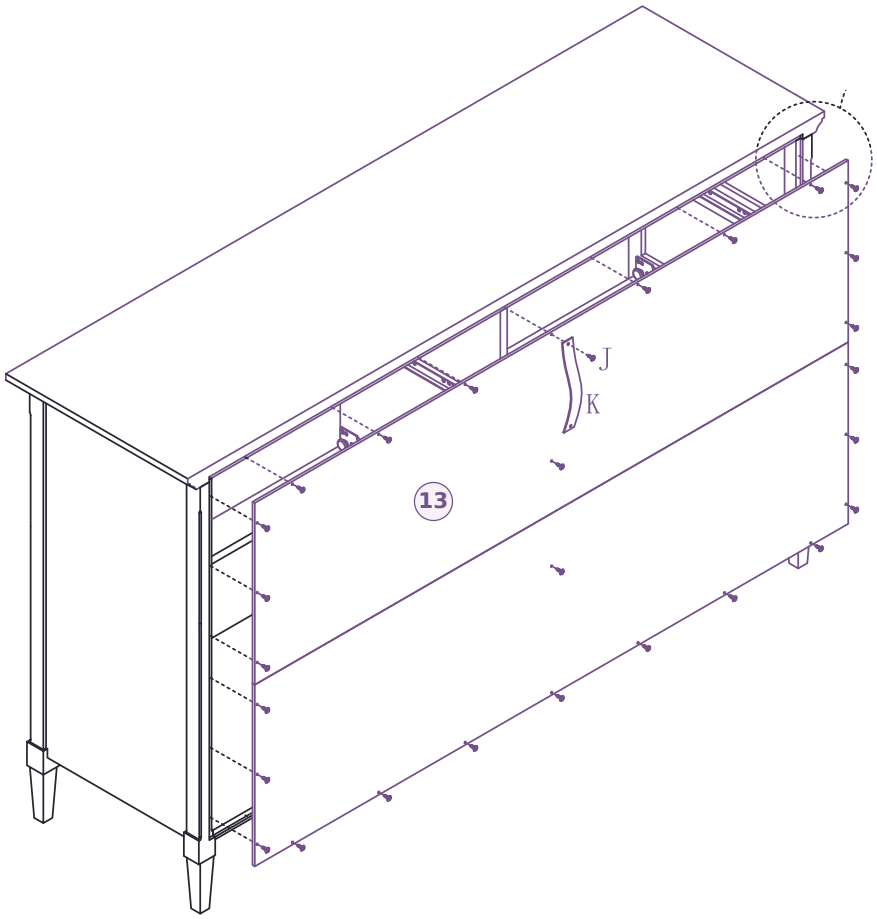

Upper corner

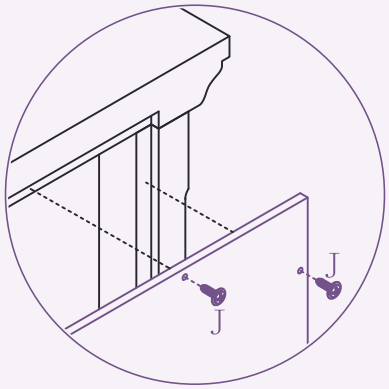

Strap at center

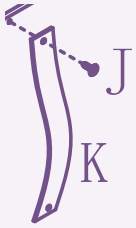

K secured by one J screw

BEFORE YOU CONTINUE

The back lies flat and the free end of strap K is accessible for the wall attachment.

STEP 11 OF 12

Match the drawers to the openings

PARTS 3 drawers with front 5 · 3 drawers with front 6

HARDWARE No additional hardware

1. Face the dresser. Put the three drawers with front 5 in the left column. The three drawers with front 6 go in the right column.
2. Working one drawer at a time, align both drawer runners with the matching cabinet runners and guide the drawer inward.
3. Close each drawer before fitting the next. Keep all drawers empty until you have anchored the dresser in Step 12.

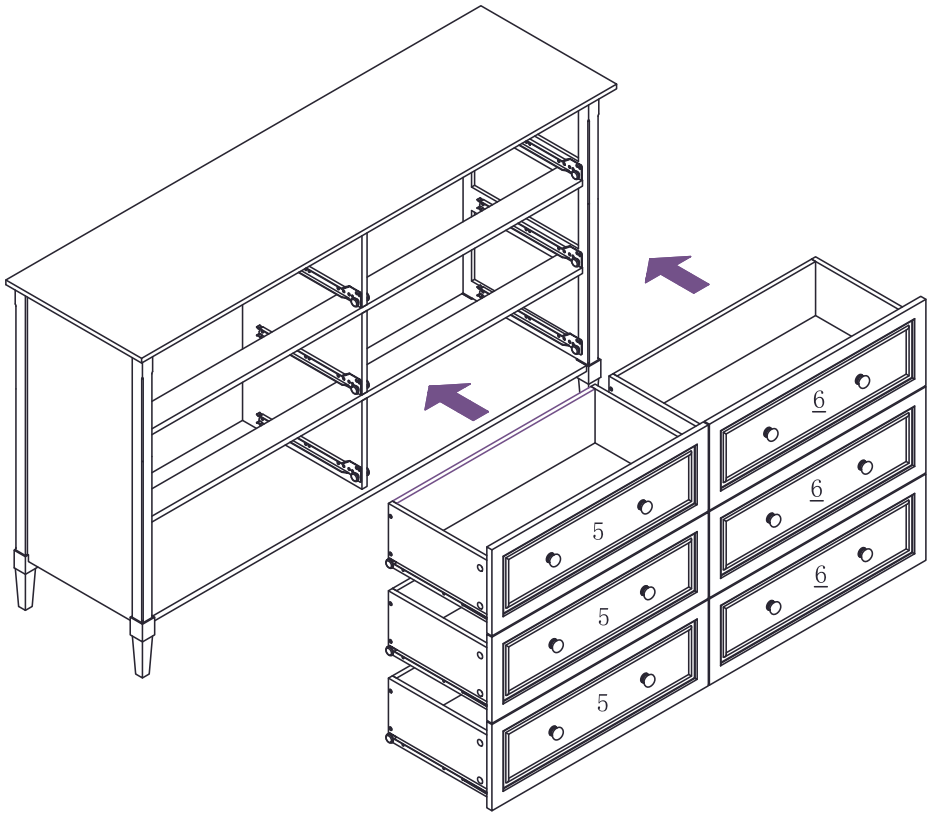

Front view

Left	Right
5	6
5	6
5	6

5 × 3 Left fronts

6 × 3 Right fronts

BEFORE YOU CONTINUE

Each drawer sits level and closes smoothly. If it catches, check its column and the engagement of both runners.

STEP 12 OF 12

Secure the dresser to the wall

PARTS K (attached in Step 10)

HARDWARE L × 1, M × 1, N × 1 (supplied wall hardware)

1. With a second person, move the empty dresser into position. Find the free end of strap K at the upper rear and mark a suitable wall fixing point.
2. Choose fasteners suitable for your wall. If the supplied hardware suits your wall, fit anchor L, then pass screw M through washer N and the free end of strap K into L. Follow the installation instructions for the fastener you use.
3. If you cannot identify a suitable fixing or wall location, have a qualified installer secure the dresser before use.

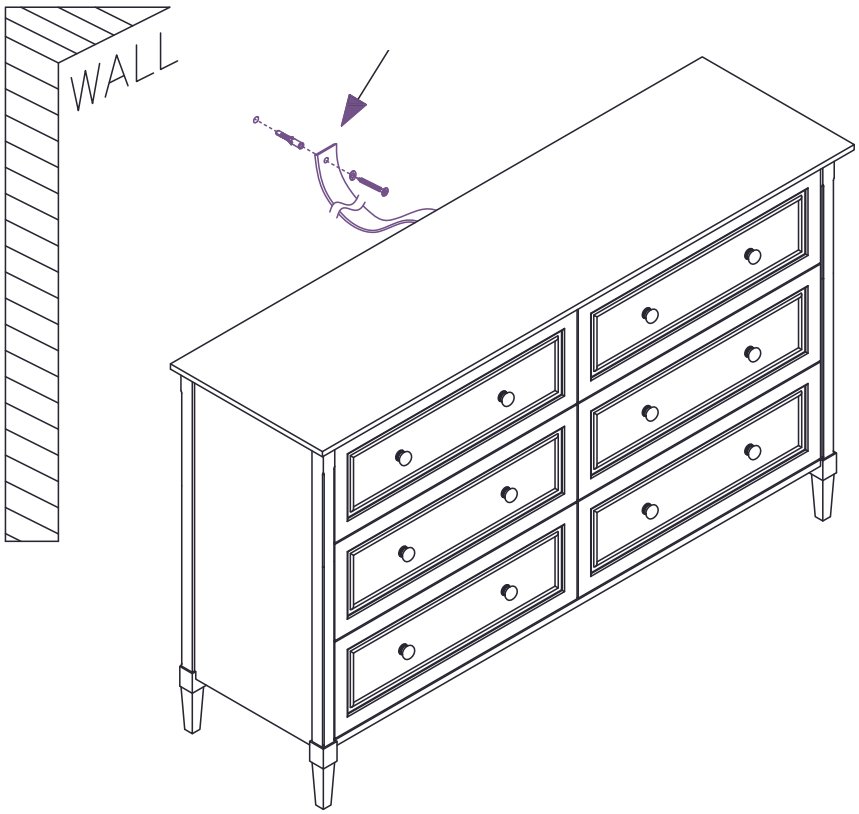

Wall attachment

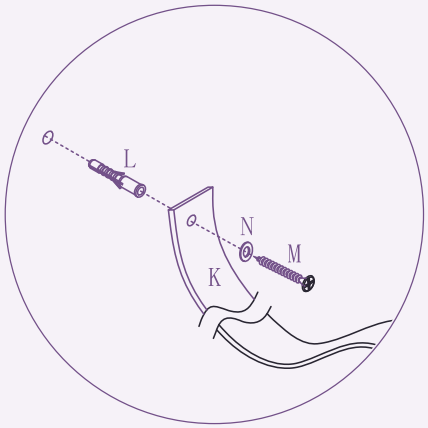

K Wall strap
L Wall anchor
M Mounting screw
N Washer

BEFORE FIRST USE

Check that the strap is firmly secured to both the dresser and the wall before loading the drawers.