ASSEMBLY INSTRUCTION

Ainsley Standing Desk

Components

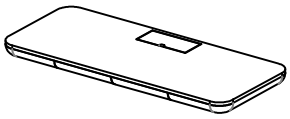

A
X1

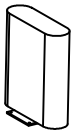

B
X2

Hardware List				
a		Screw	8x35mm	8pcs
a		Spring Washer	Ø8	8pcs
a		Flat Gasket	Ø8	8pcs
a		Allen Key	8mm	1pc

ASSEMBLY INSTRUCTION

Step1

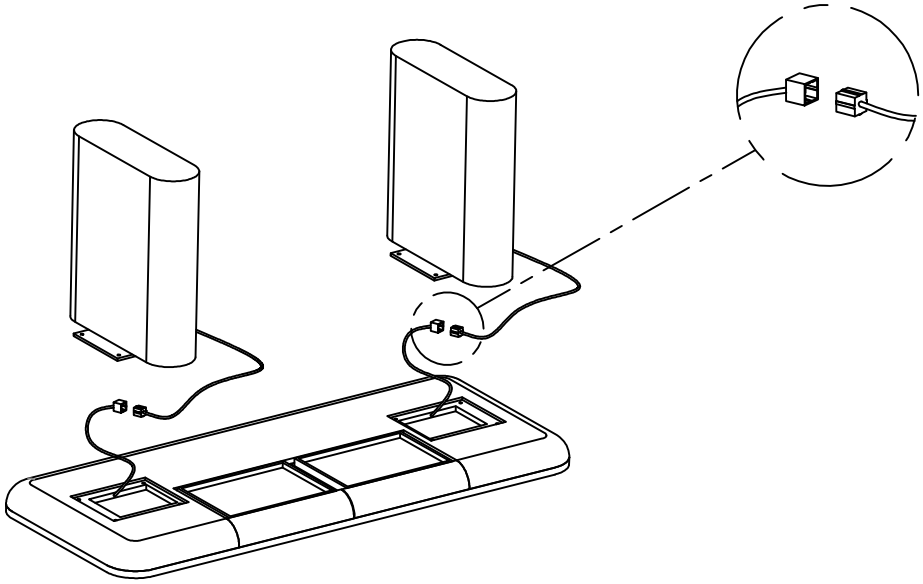

Step2

