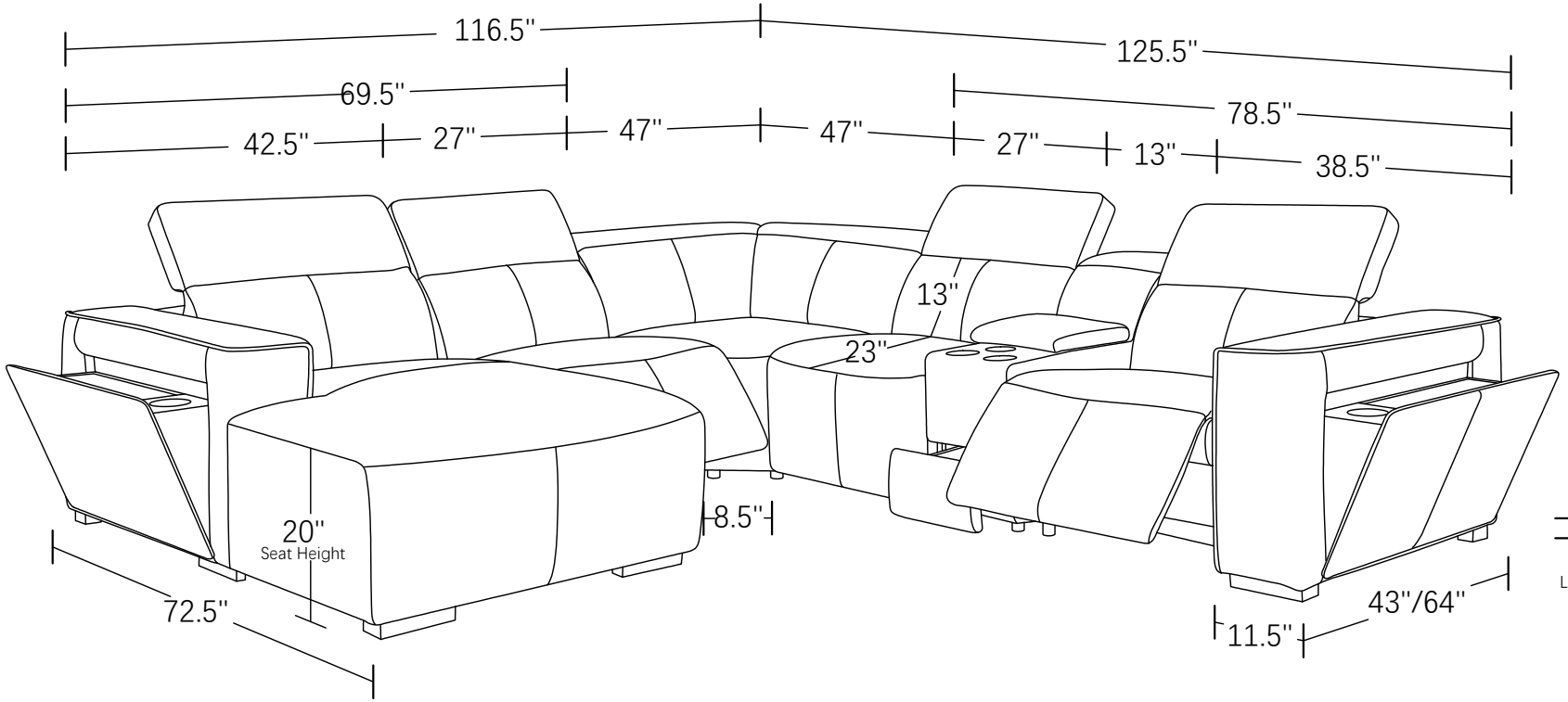

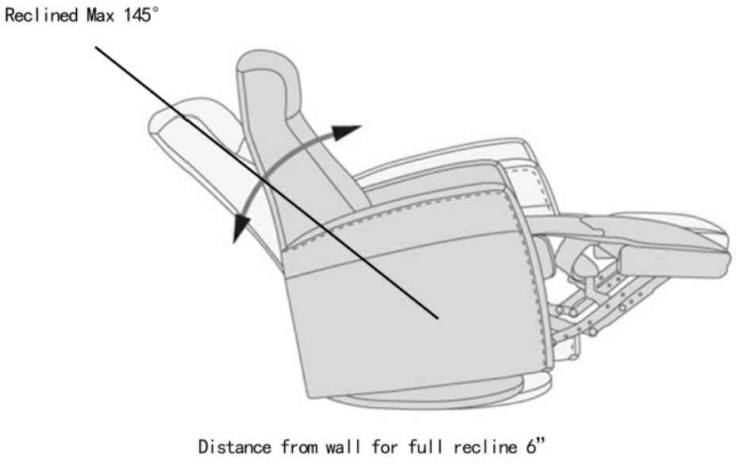

Distance from wall for full recline 6”



*Rotate Chair 90° to fit through the door before attaching backrest