Installation & Assembly

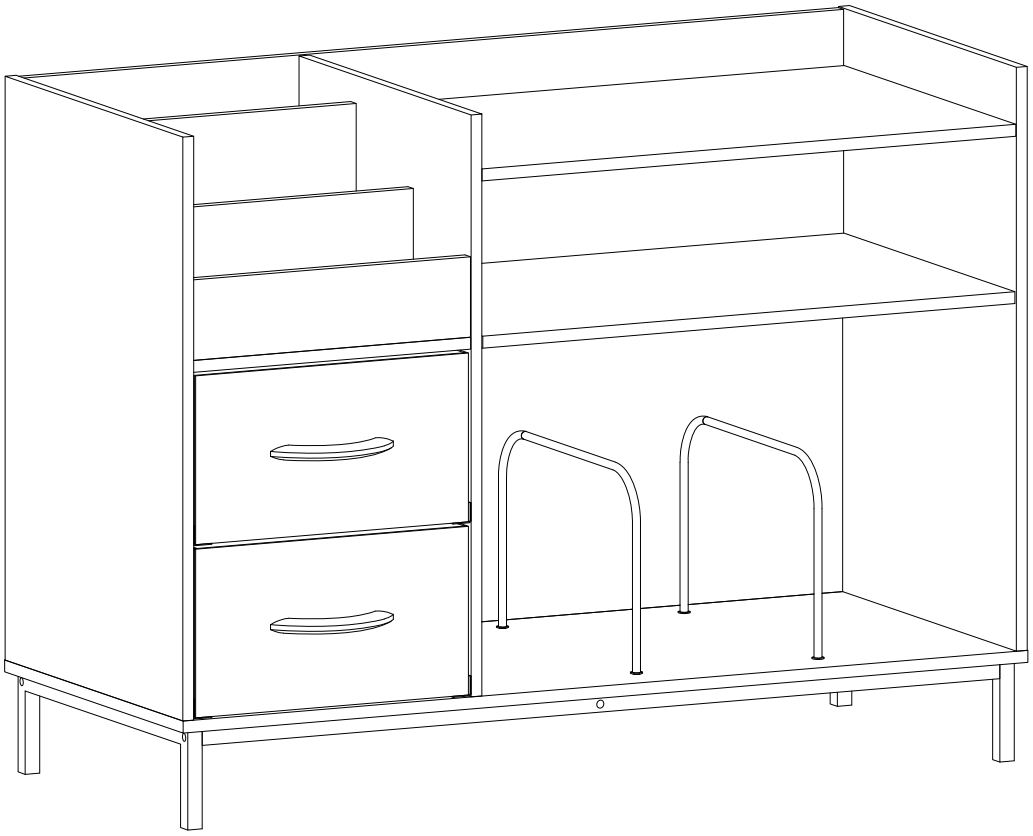

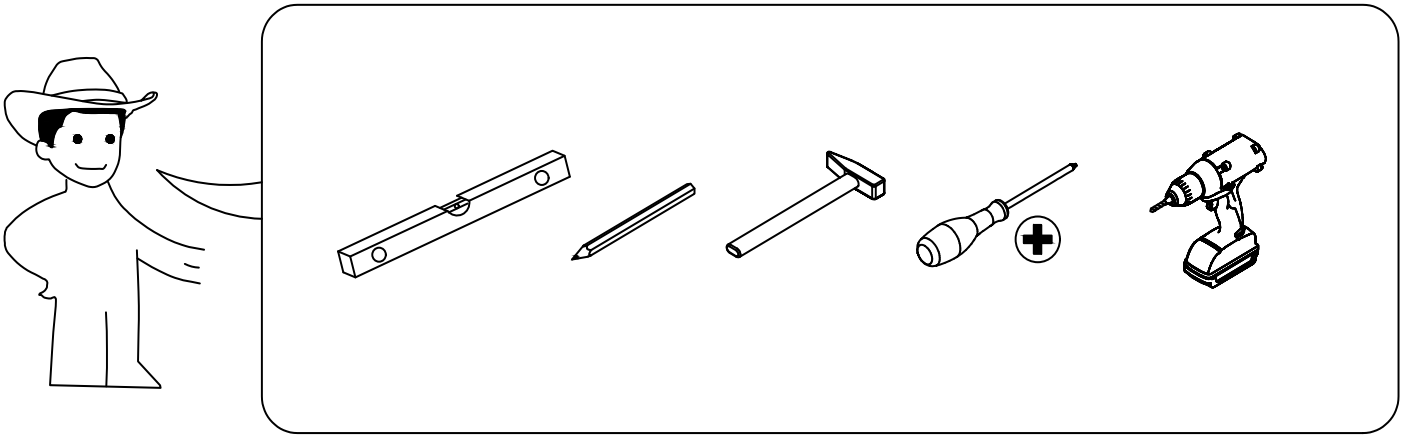

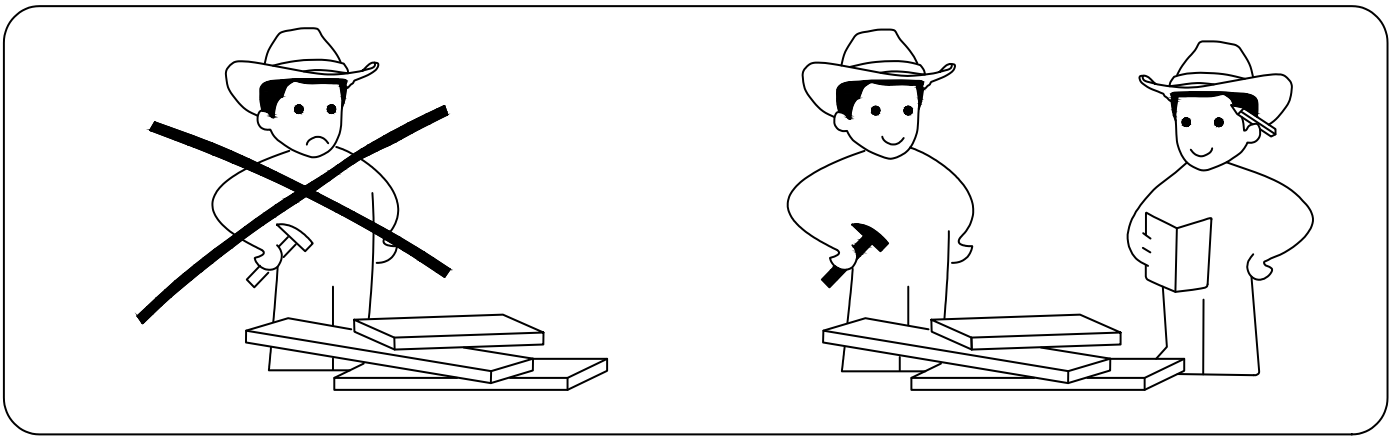

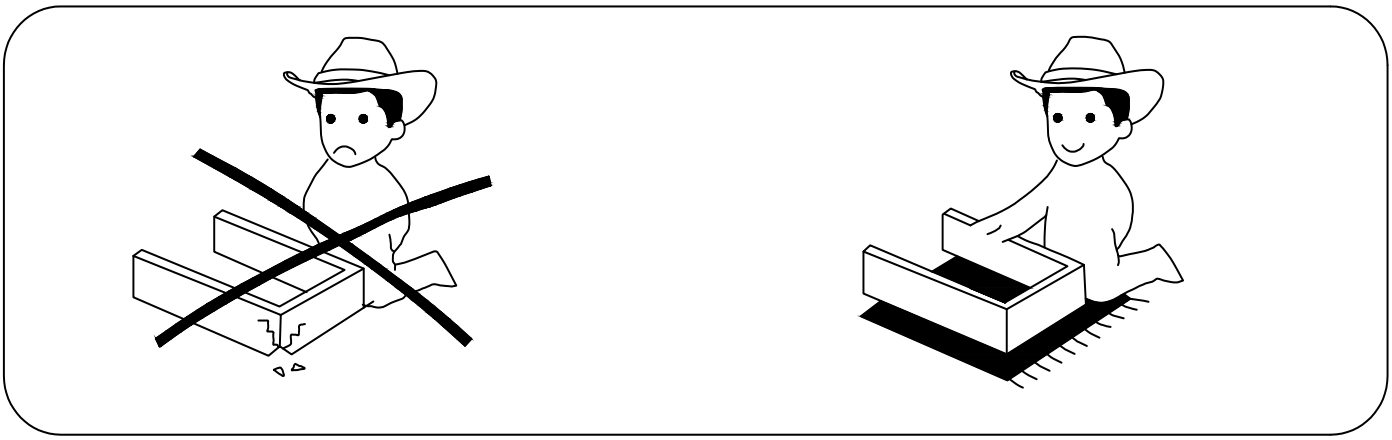

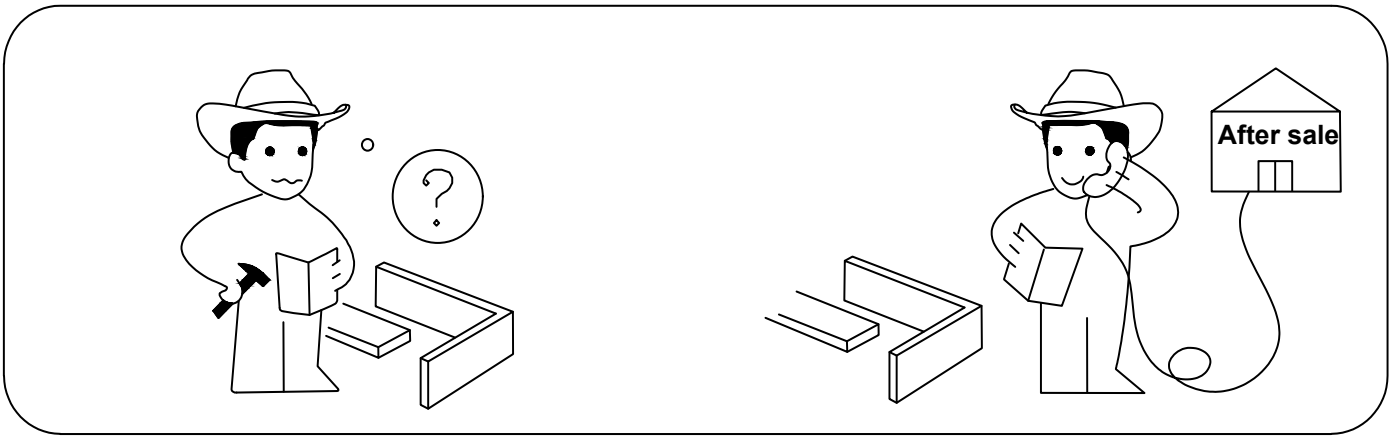
?
After sale

1x1*pc 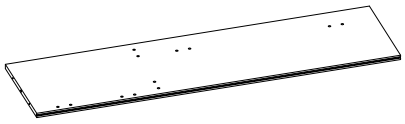	2x1*pc 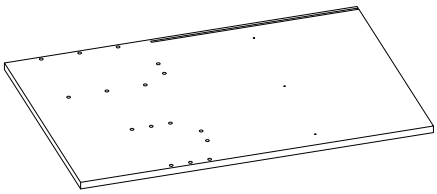	3x1*pc 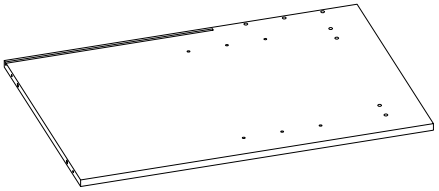
4x1*pc 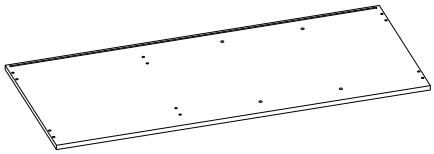	5x1*pc 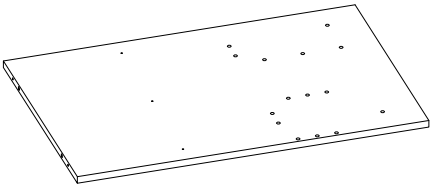	6x1*pc 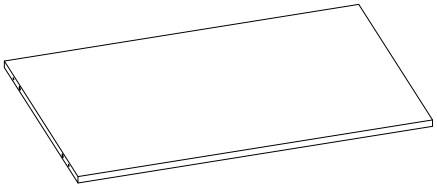
7x1*pc 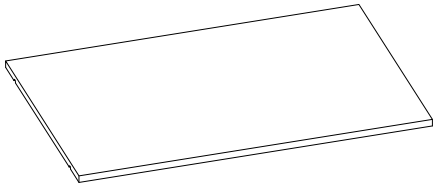	8x1*pc 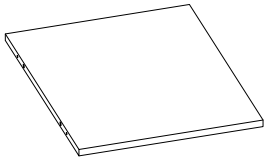	9x1*pc 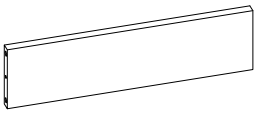
10x1*pc 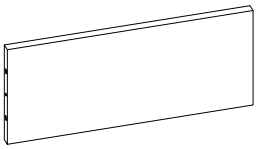	11x1*pc 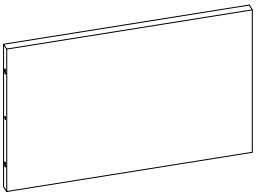	12x1*pc 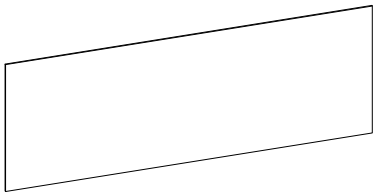
13x2*pcs 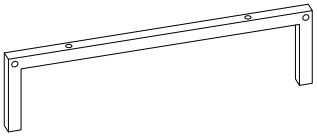	14x2*pcs	15x1*pc 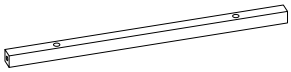

16x2*pcs

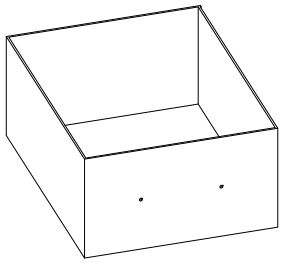

17x2*pcs

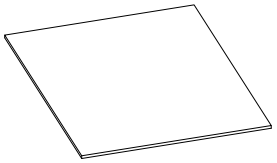

Ax30*pcs

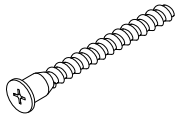

Bx34*pcs

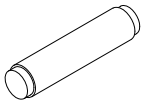

Cx16*pcs

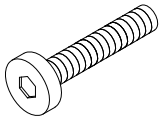

Dx2*pcs

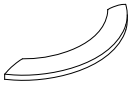

Ex4*pcs

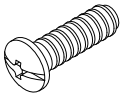

Fx6*pcs

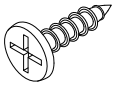

Gx4*pcs

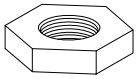

Hx8*pcs

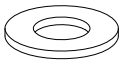

Kx4*pcs

Lx30*pcs

Mx1*pc

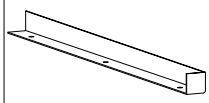

Px1*pc

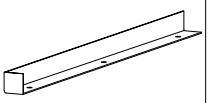

Nx1*pc

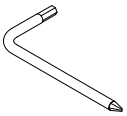

Ox1*pc

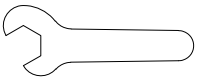

Ix2*pcs

Qx4*pcs

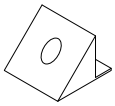

Rx4*pcs

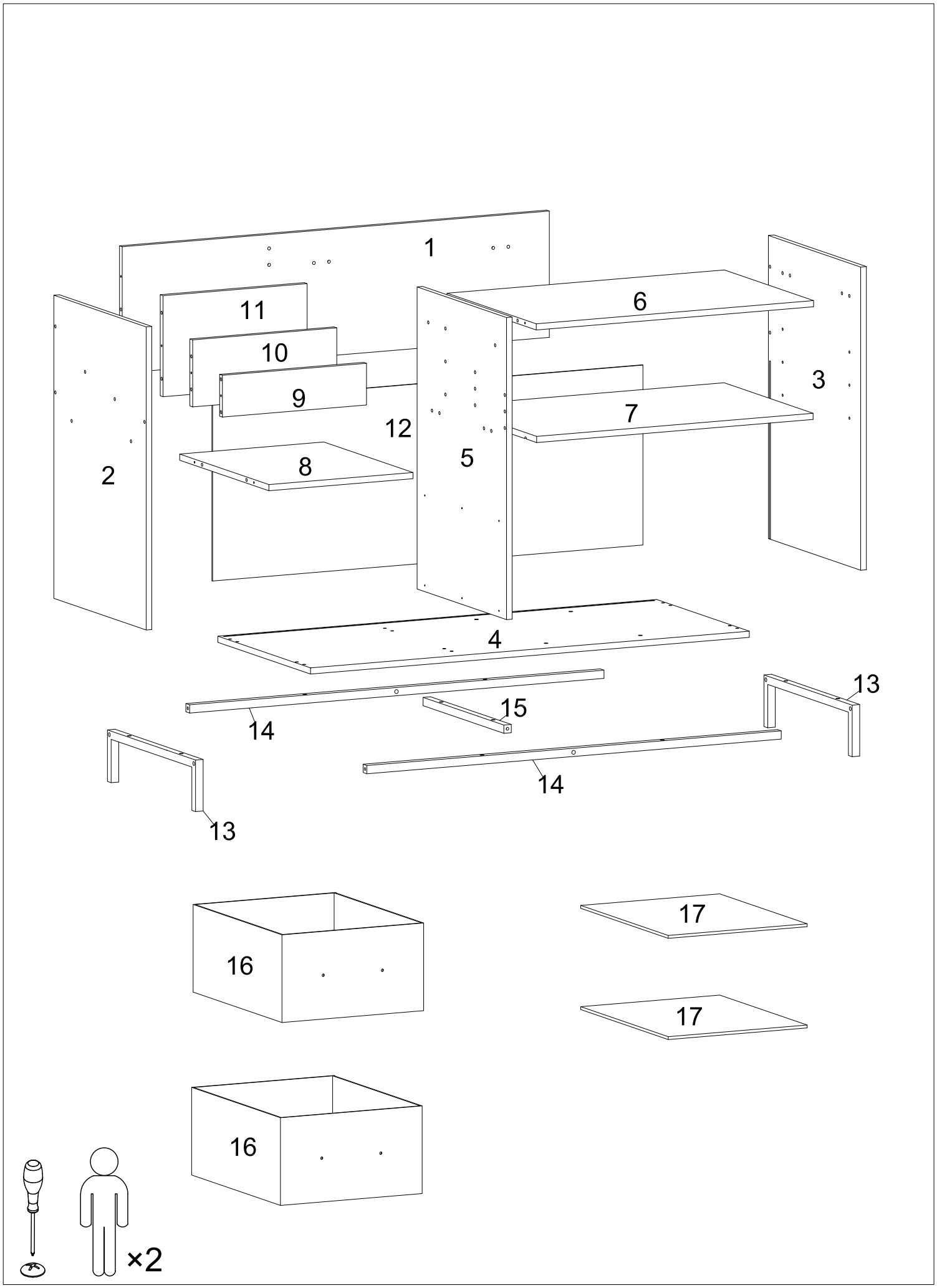
1
2
3
4
5
6
7
8
9
10
11
12
13
14
15
16
17
×2

1

Place accessory M on the side panel and secure them with three screws.

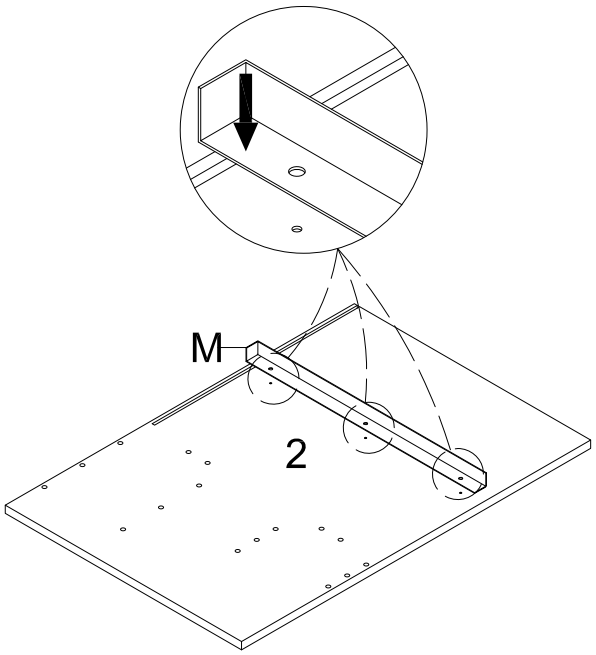

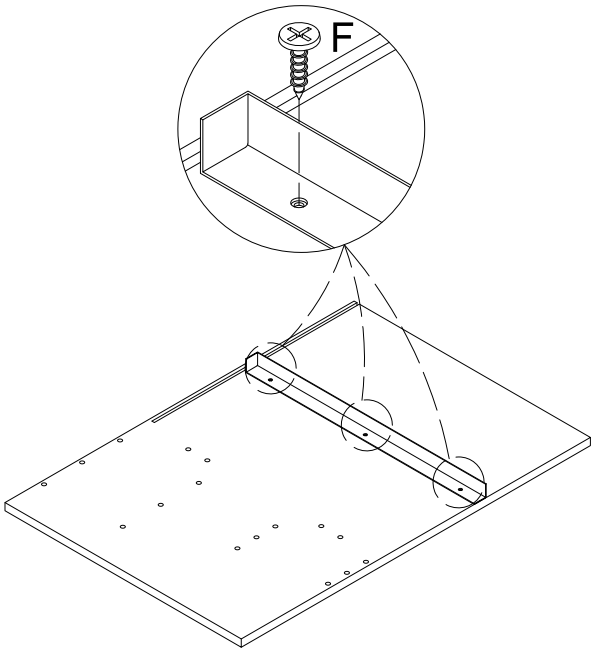

Fx3

2

Place accessory P on the side panel and secure them with three screws.

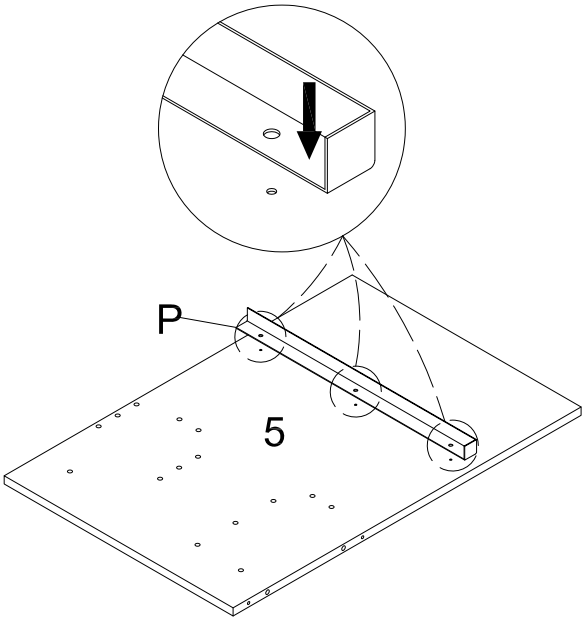

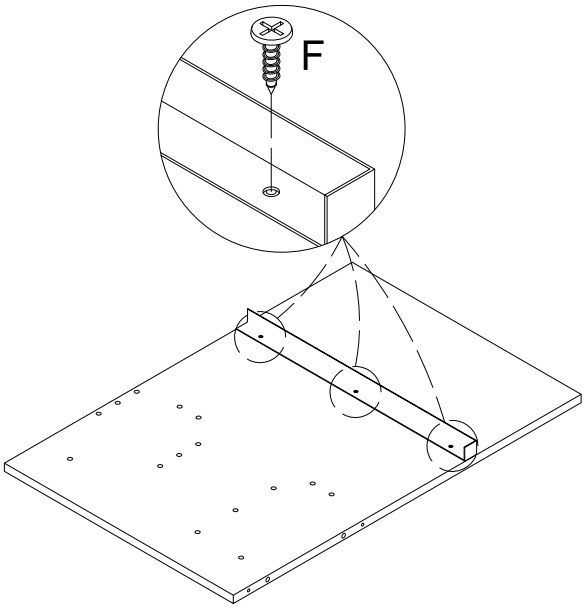

Fx3

3

Put these two panels together and secure them with two wooden tenons and two screws.

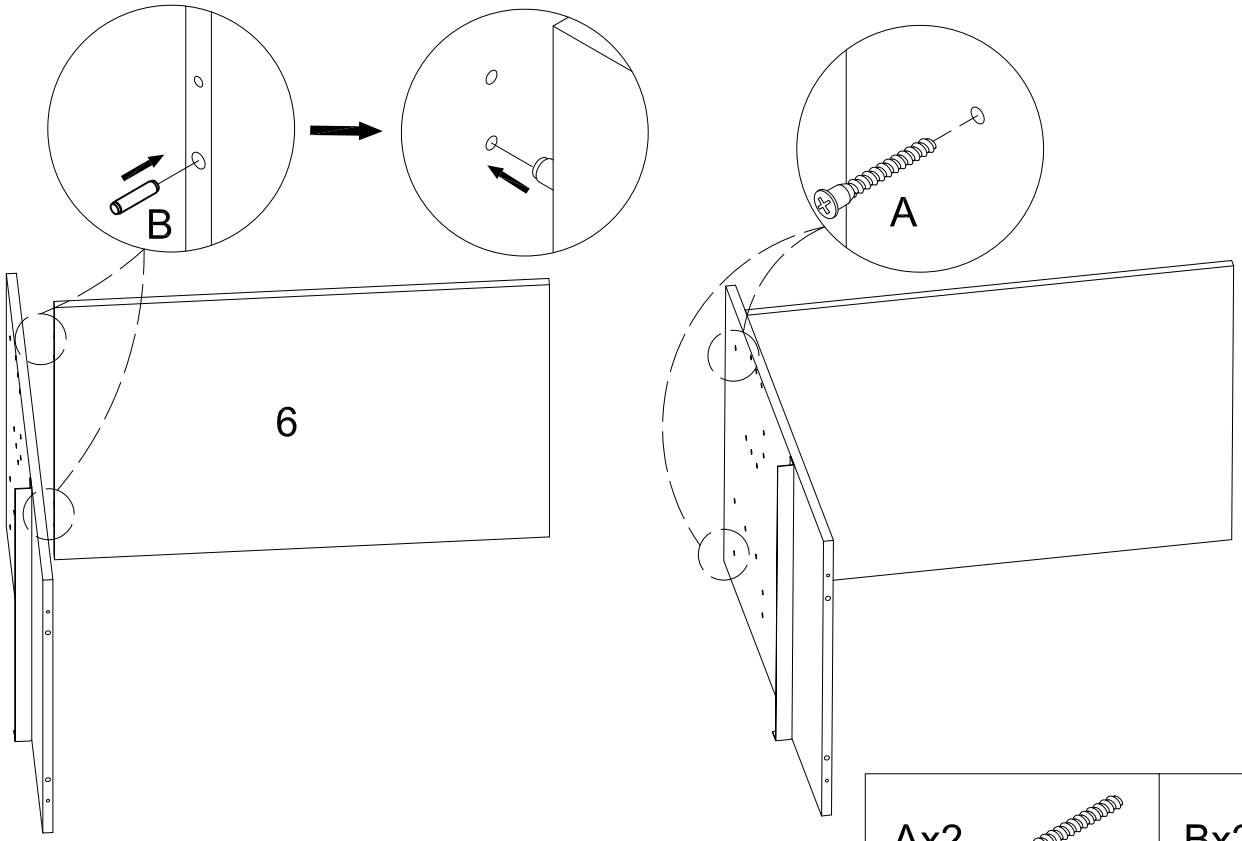

Ax2 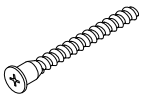	Bx2 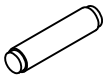

4

Put these panels together and secure them with two wooden tenons and two screws.

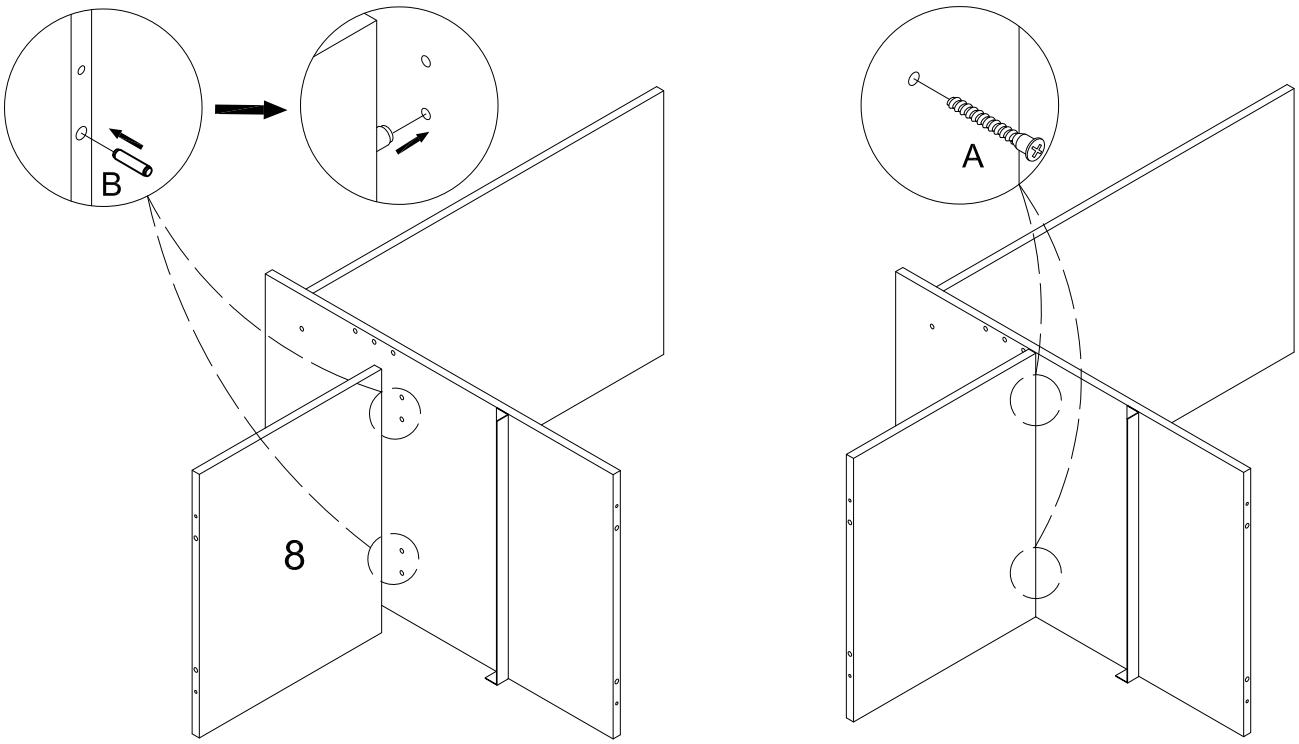

Ax2 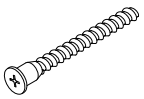	Bx2 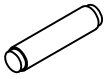

5

Put these panels together and secure them with six wooden tenons and six screws.

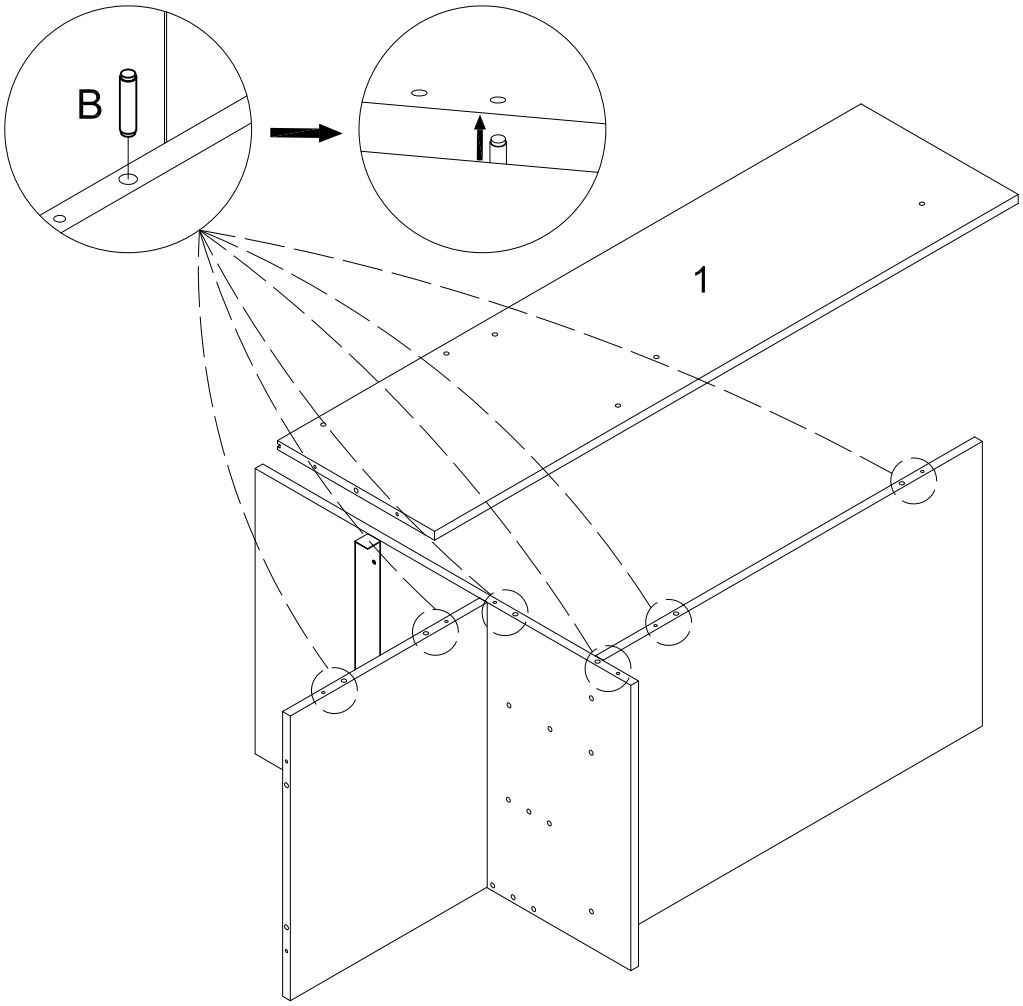

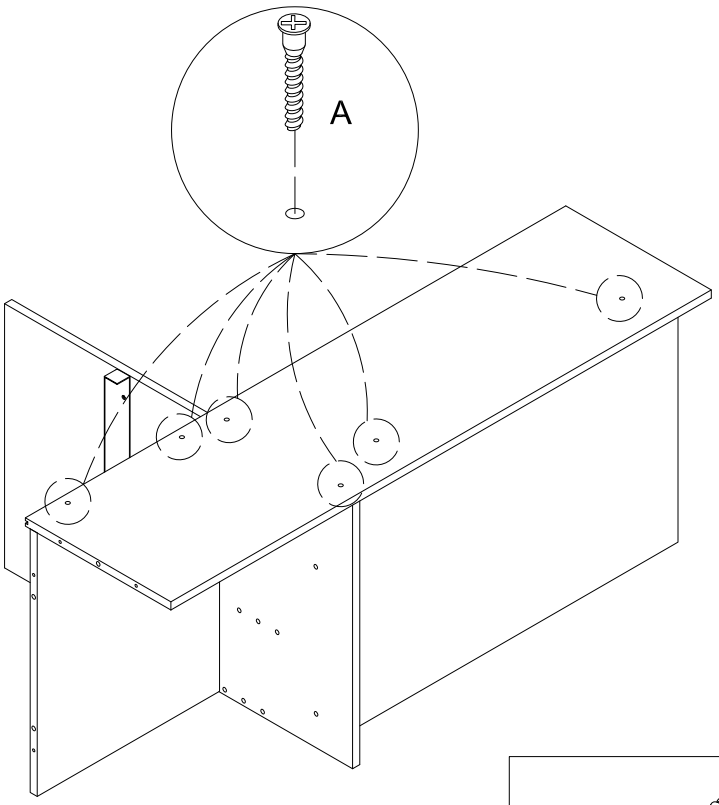

Ax6 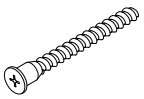	Bx6 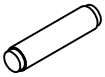

6

Put these panels together and secure them with three wooden tenons and four screws.

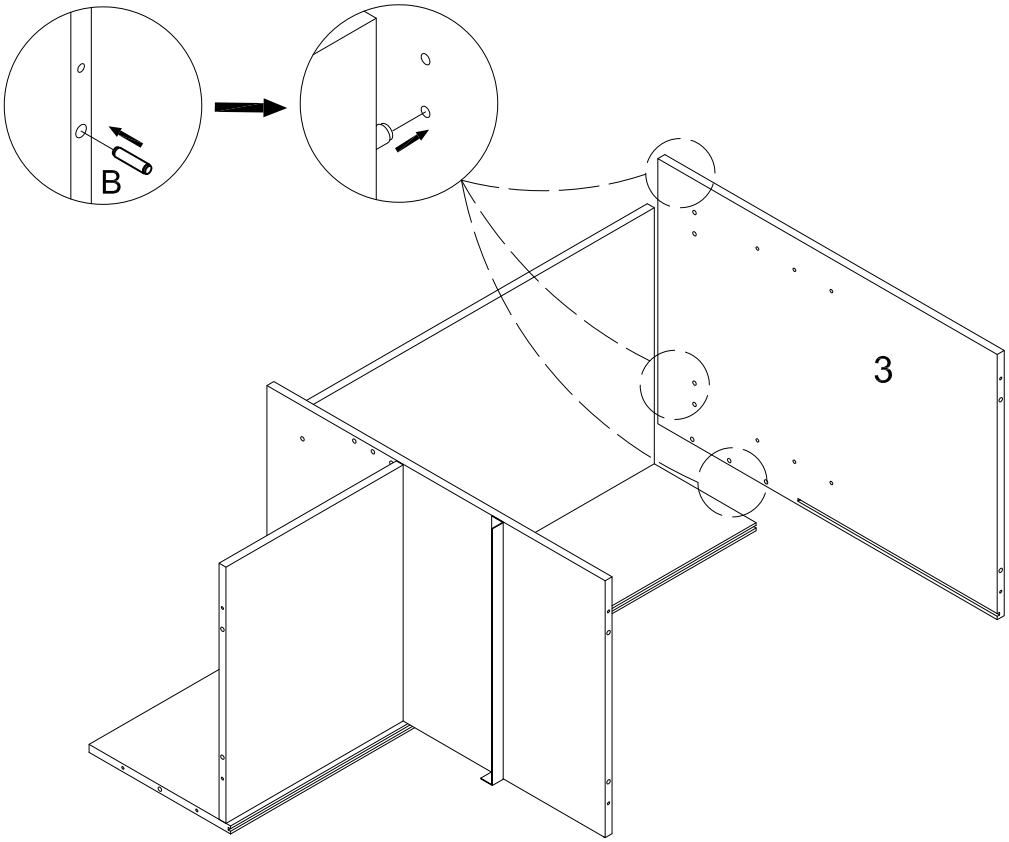

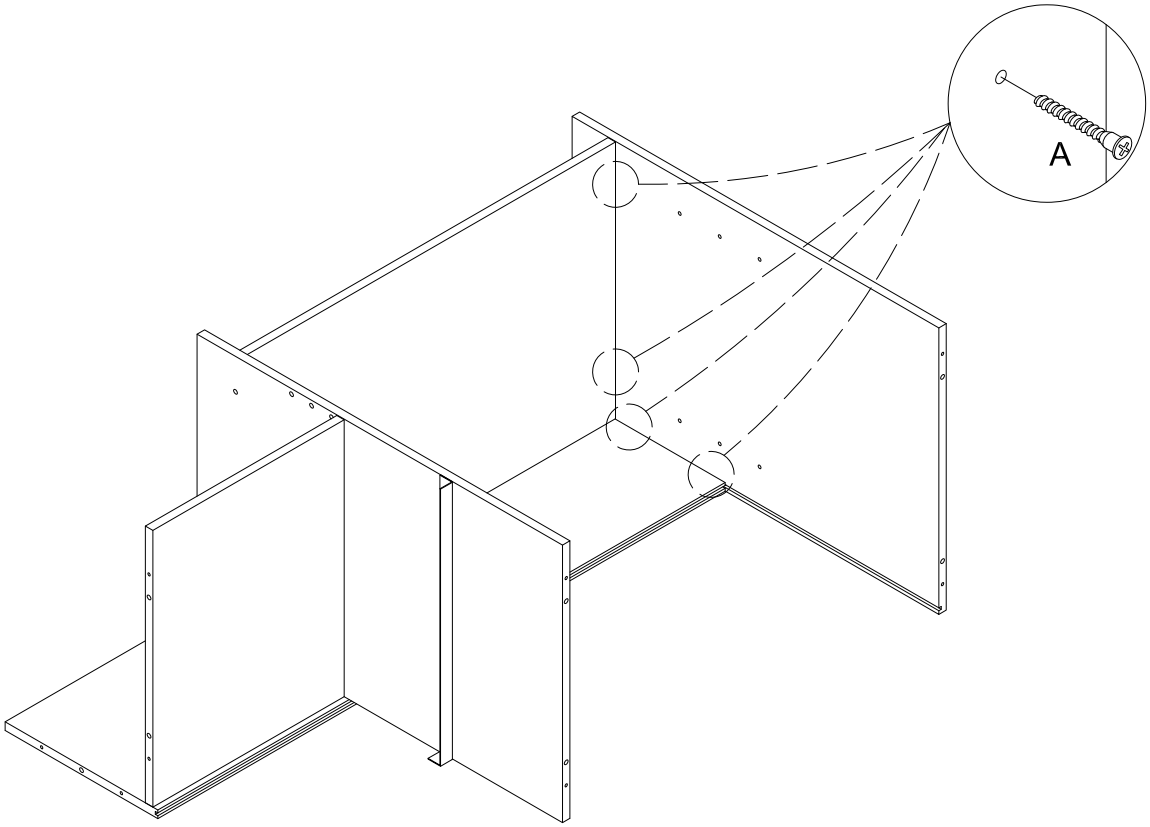

Ax4 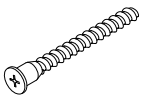	Bx3 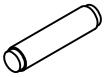

7

Put these panels together and secure them with six wooden tenons and three screws.

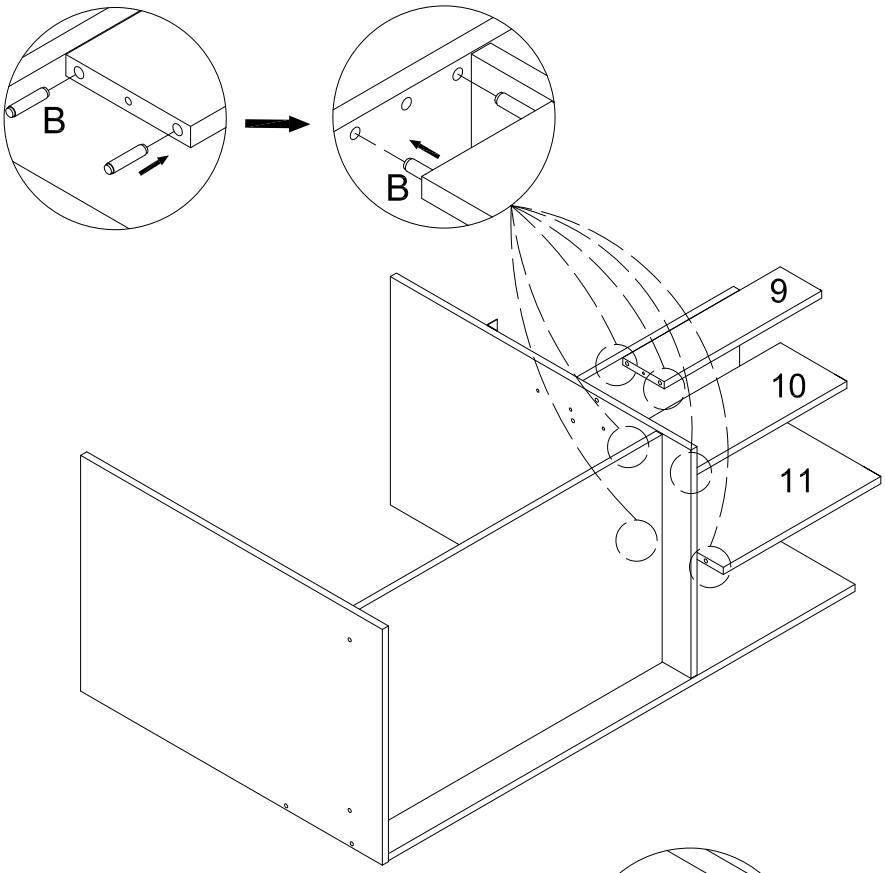

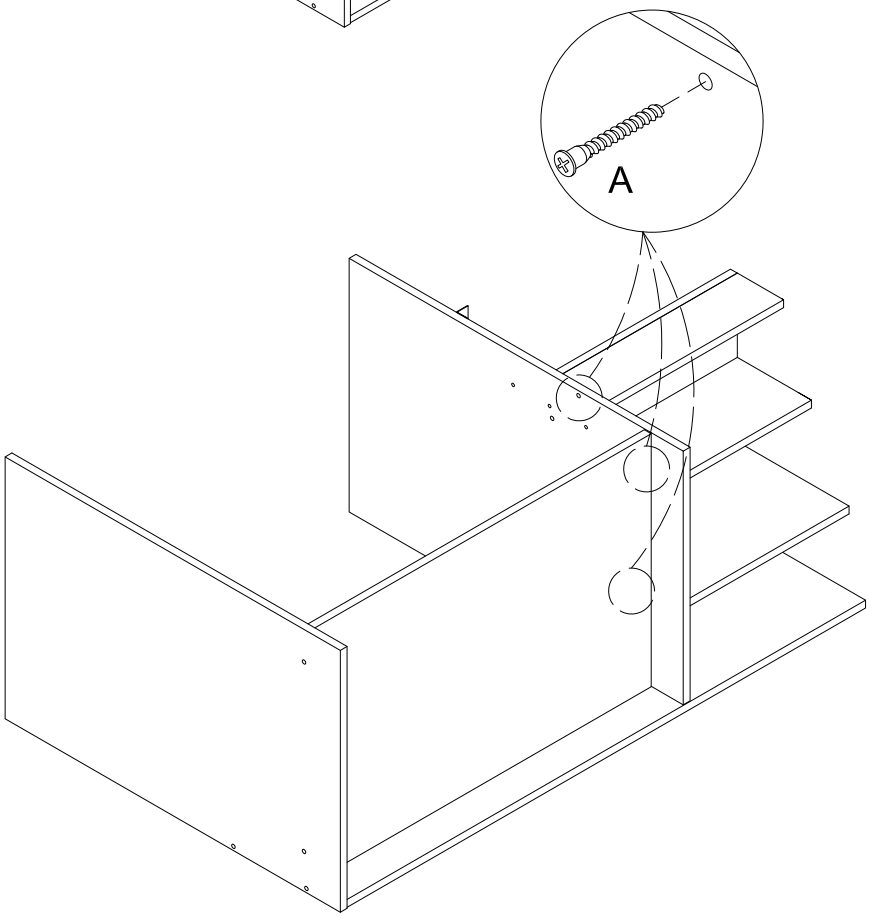

Ax3 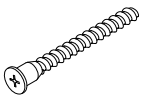	Bx6 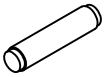

8

Put these panels together and secure them with nine wooden tenons and seven screws.

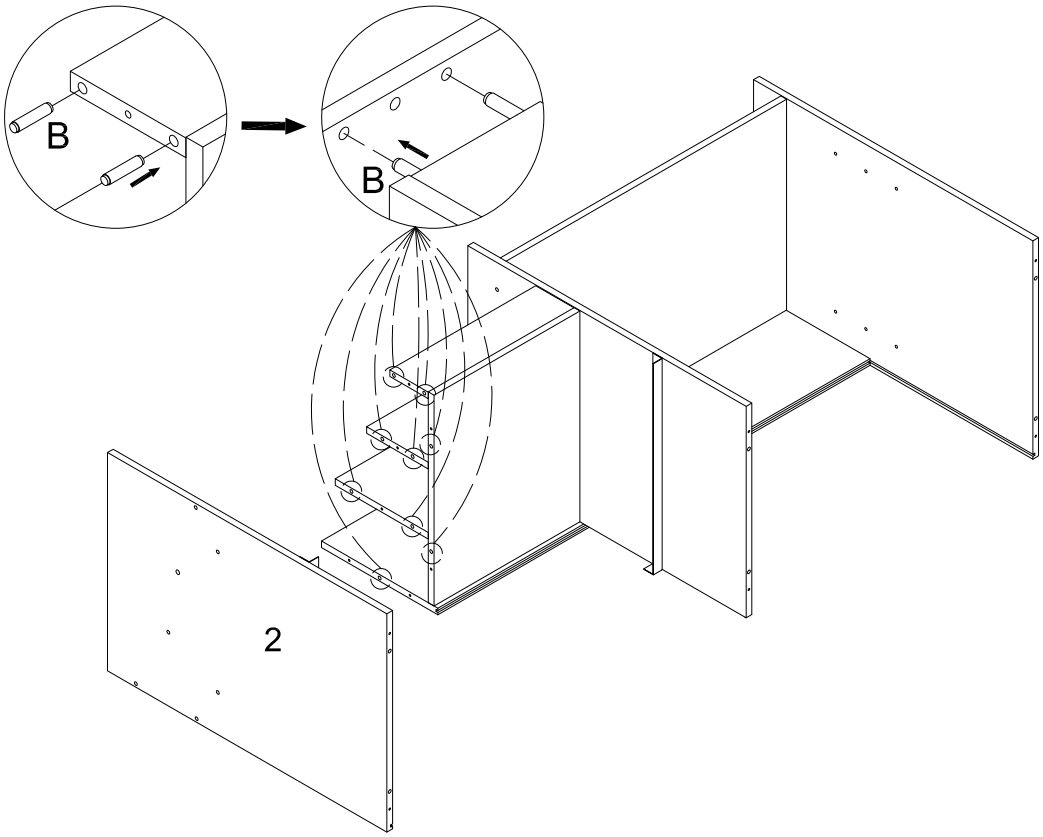

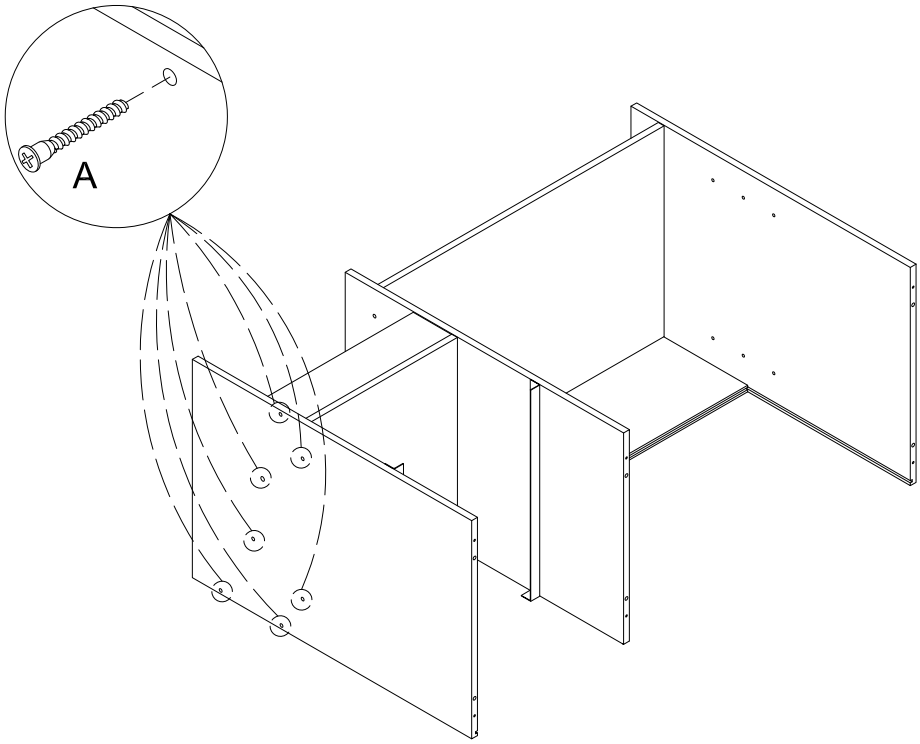

Ax7 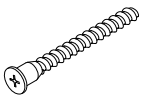	Bx9 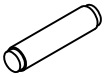

9

Insert the thin plate into the slot.

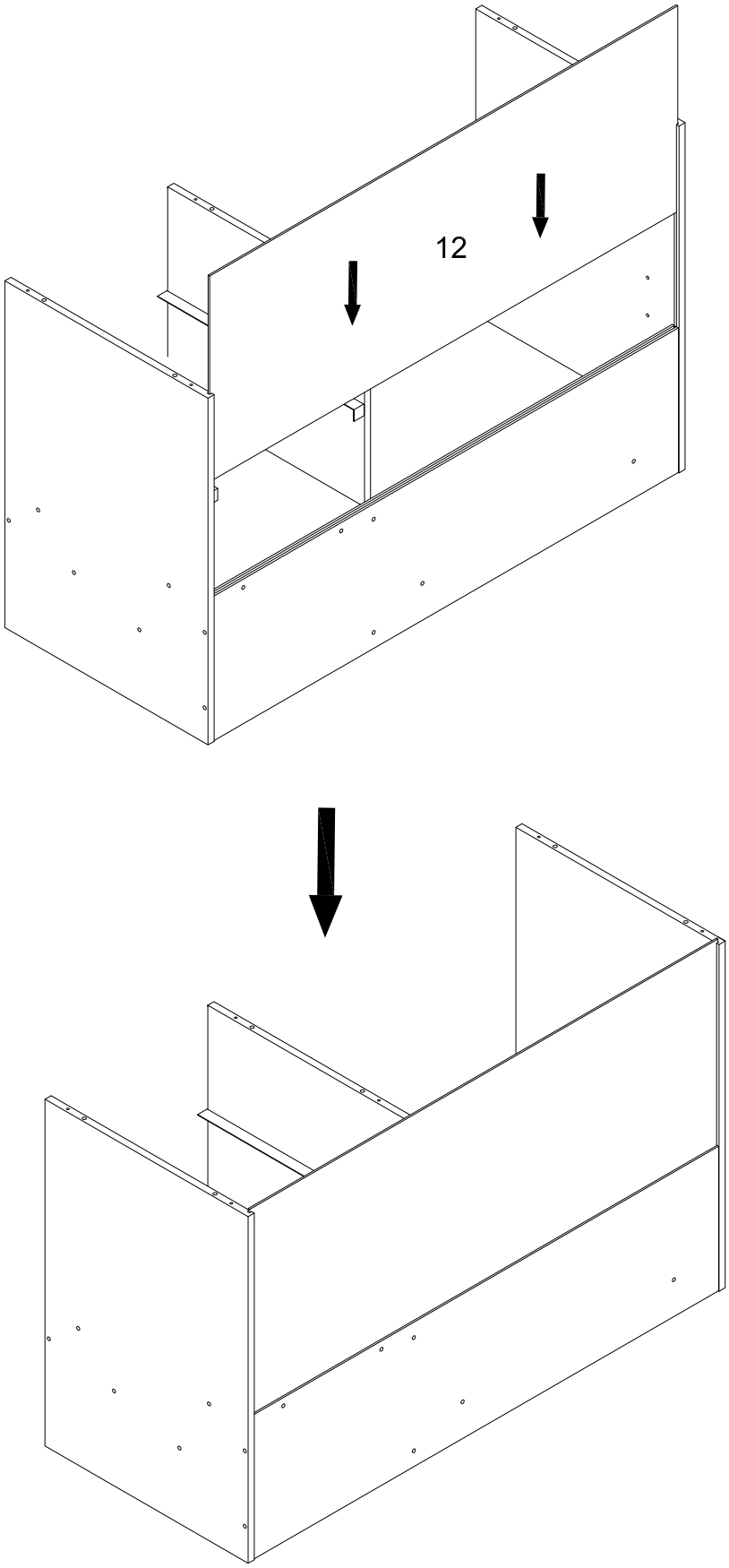

10

Put these panels together and secure them with six wooden tenons and six screws.

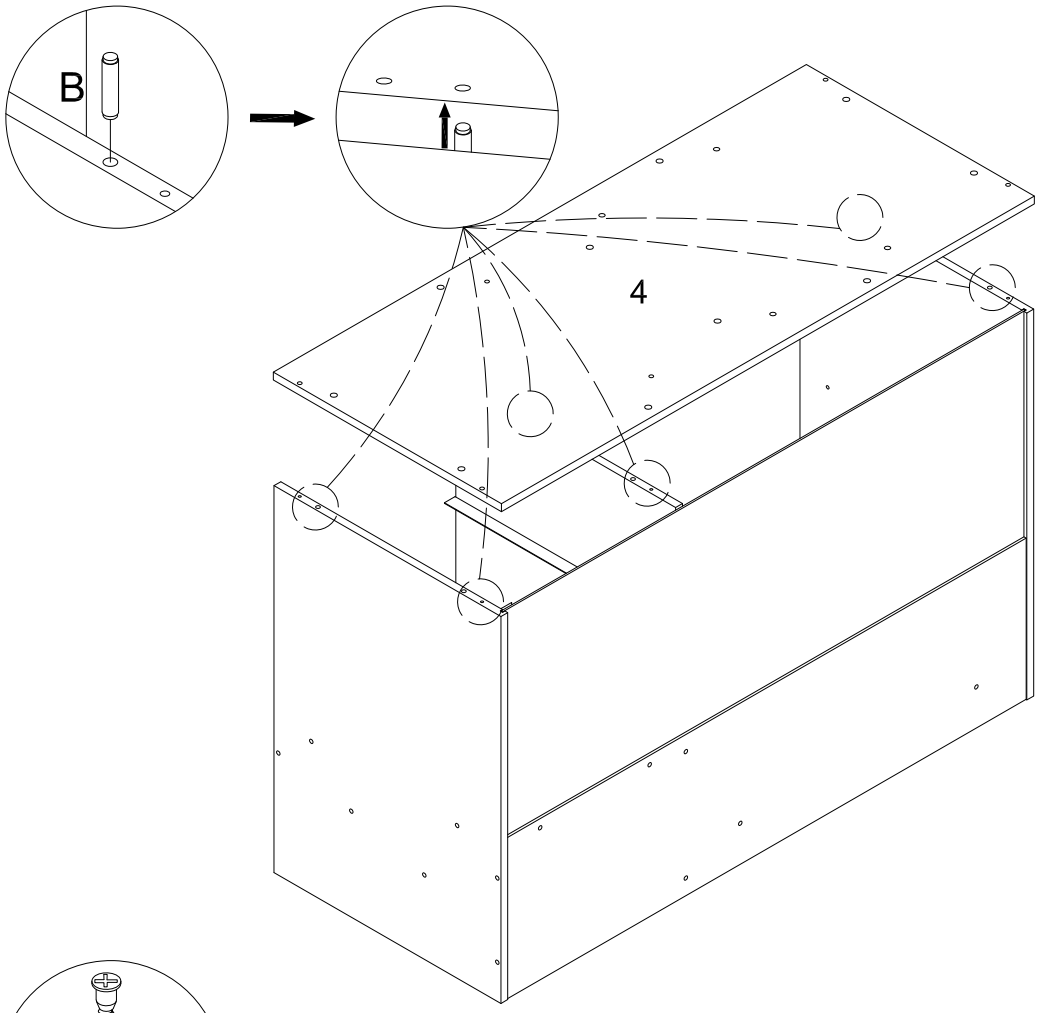

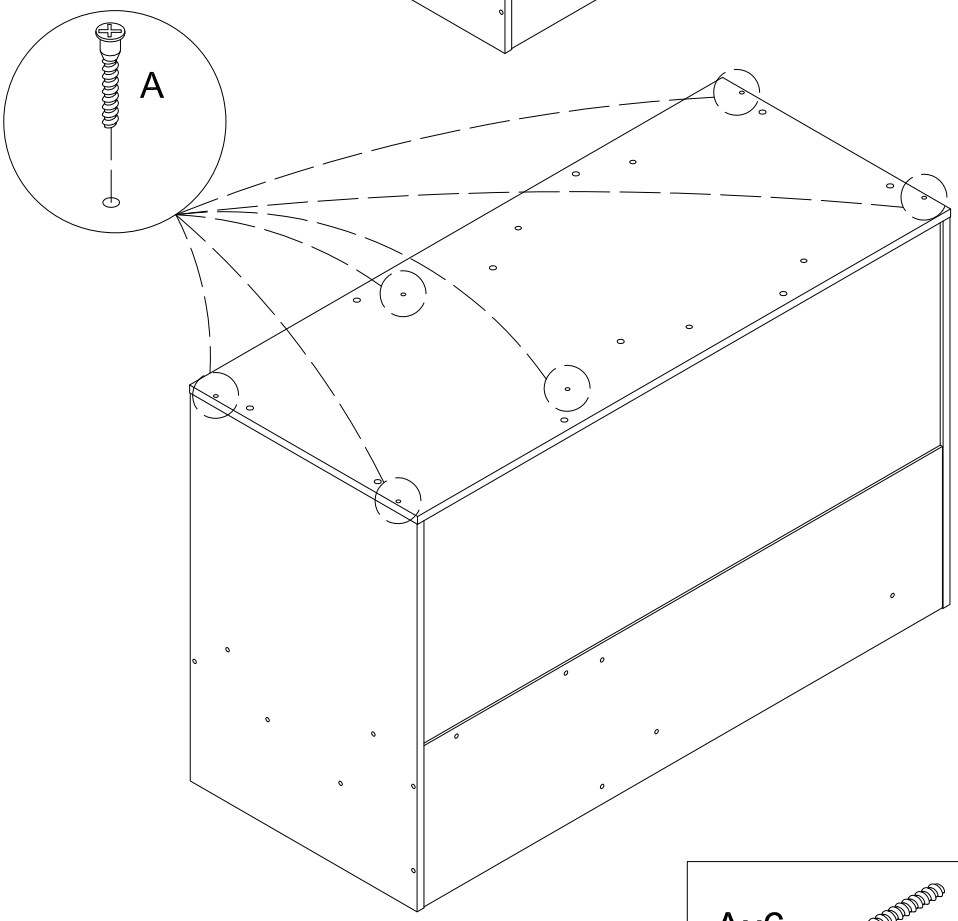

Ax6 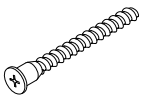	Bx6 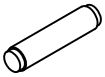

11

Put these iron pipes together and connect them with two screws.

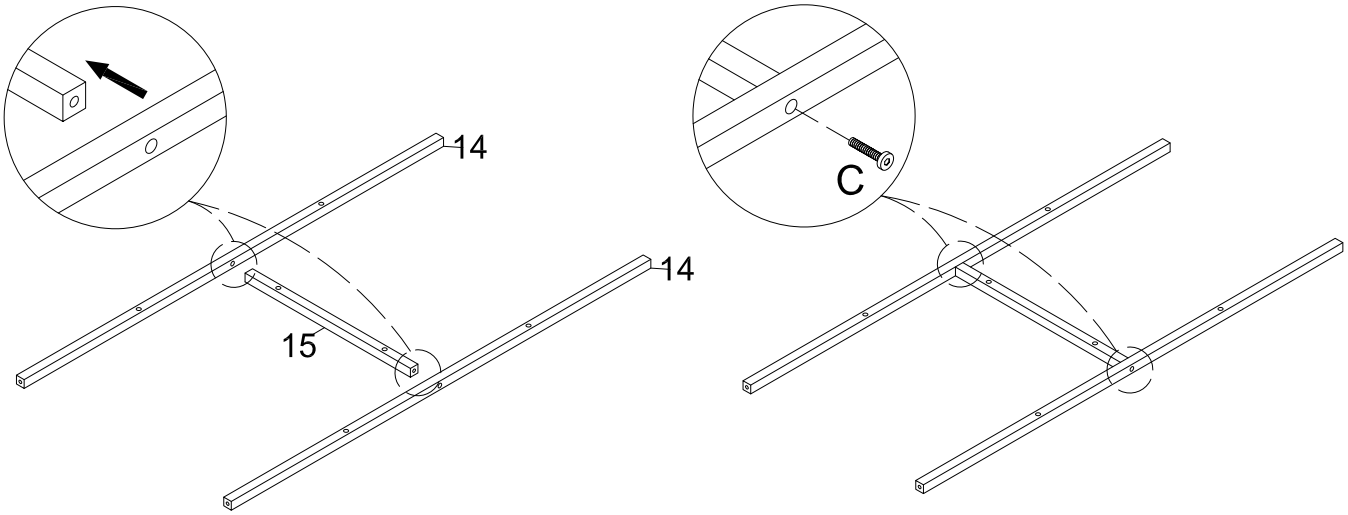

Cx2

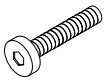

12

Put these iron pipes together and connect them with four screws.

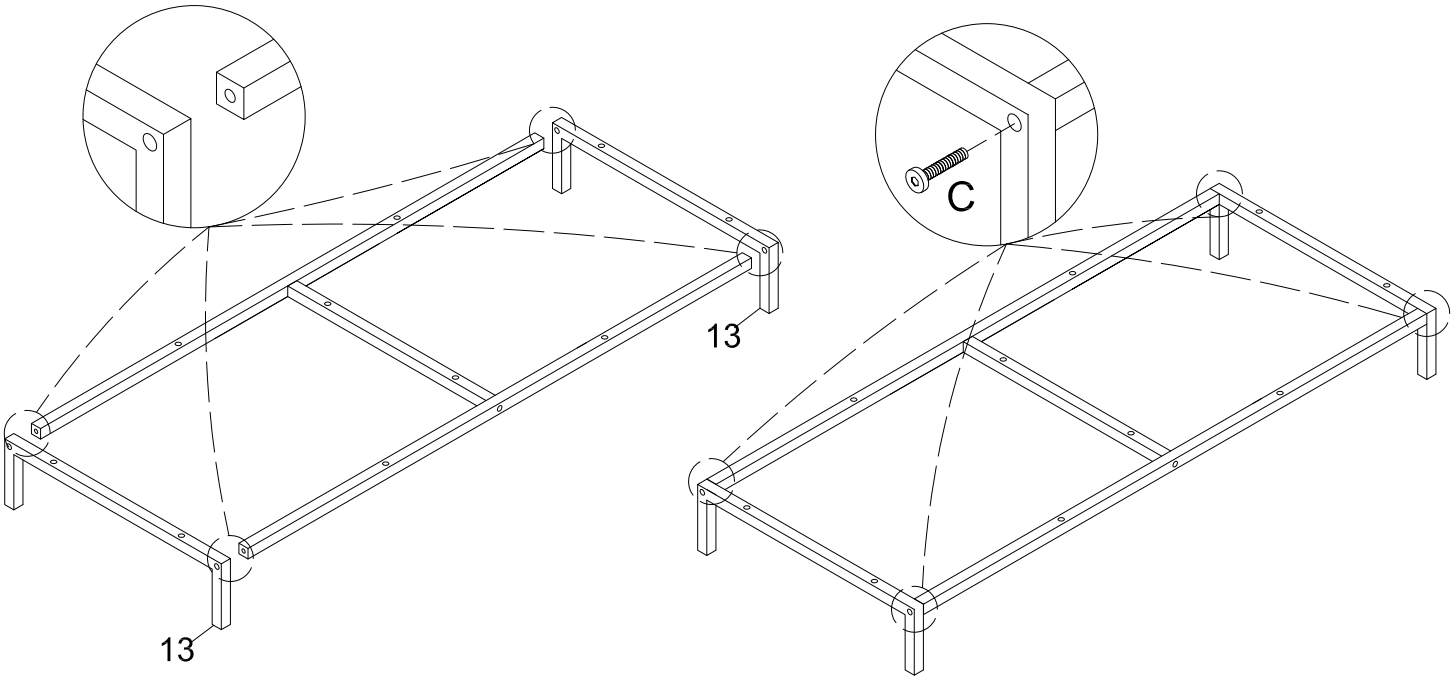

Cx4

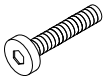

13

Put these iron frames and wooden boards together and connect them with ten screws.

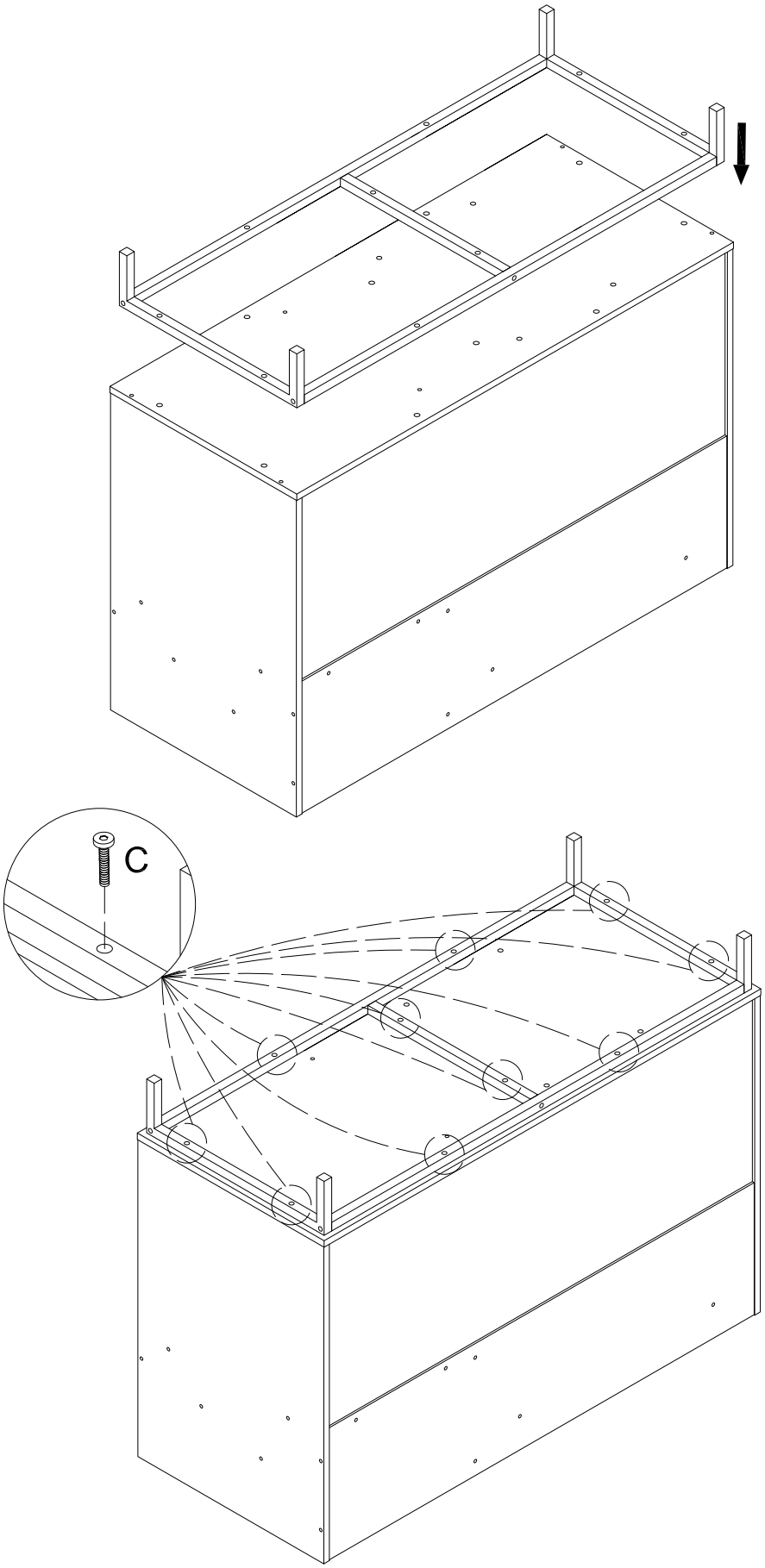

Cx10

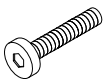

14

Place the four backboards on the thin plate and secure them with four screws.

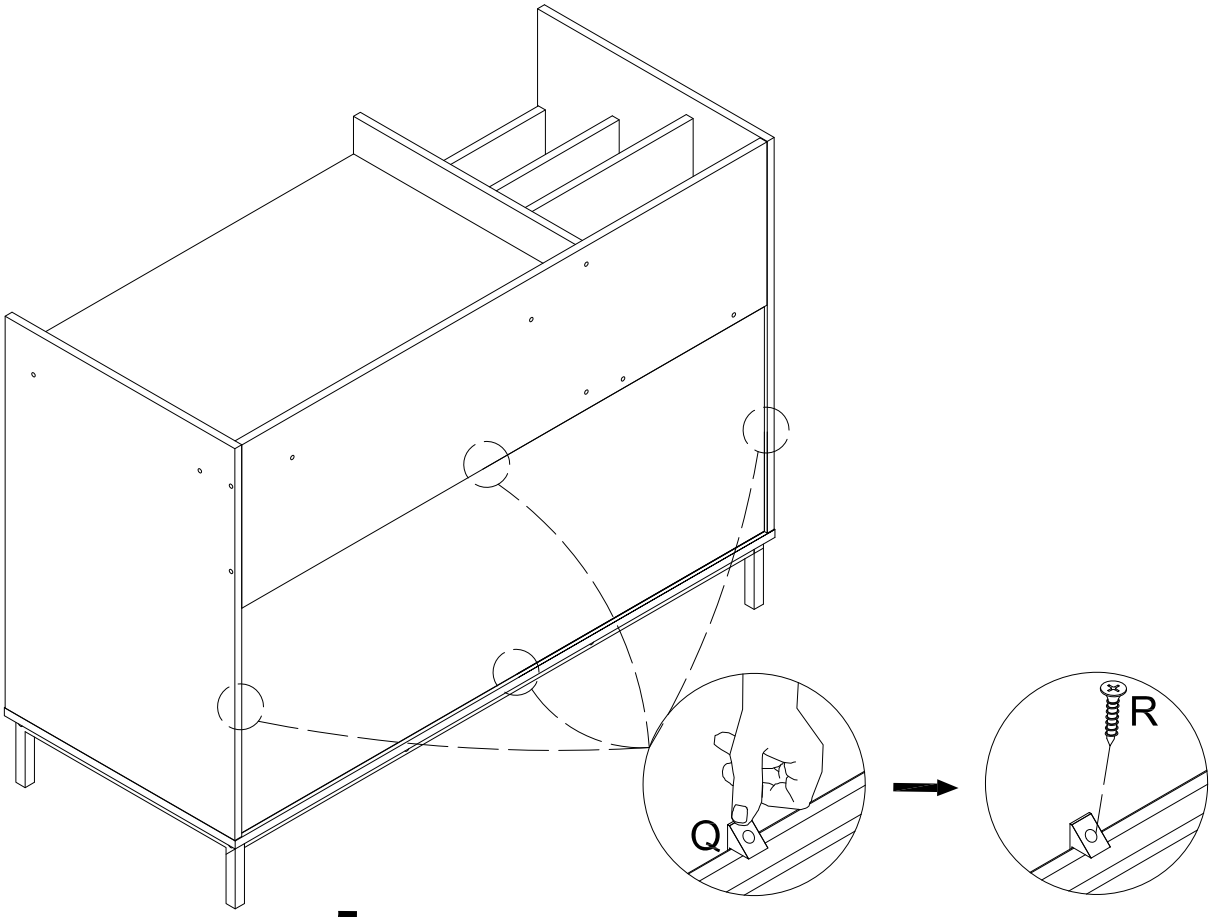

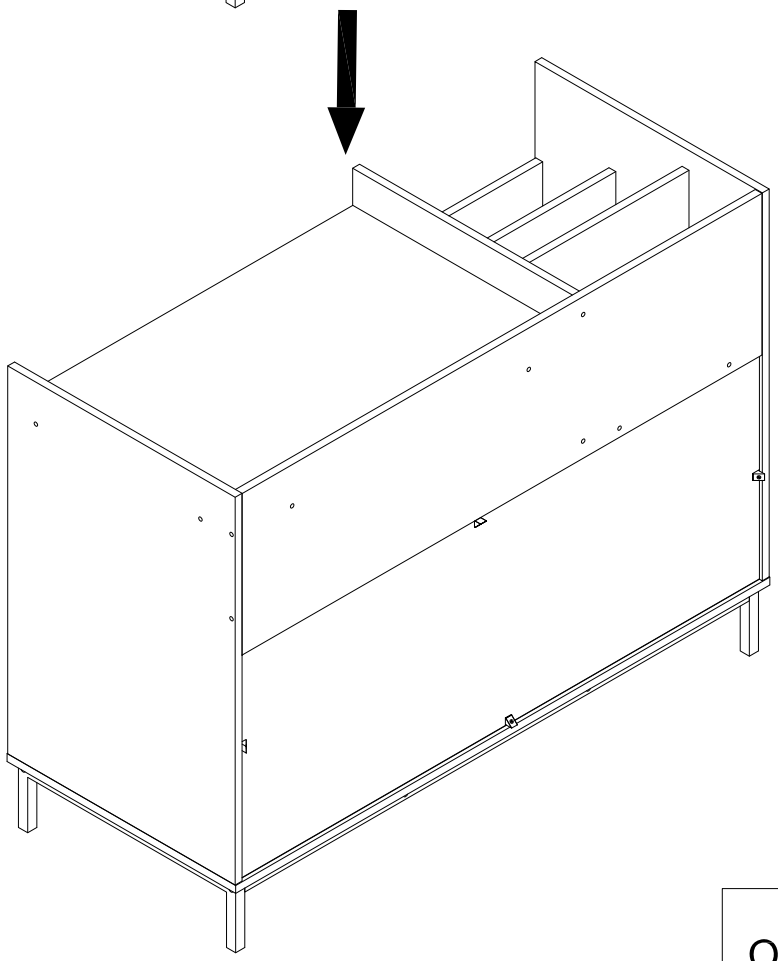

Qx4	Rx4

15

Insert two iron wires into the board and secure them with four nuts and padding .

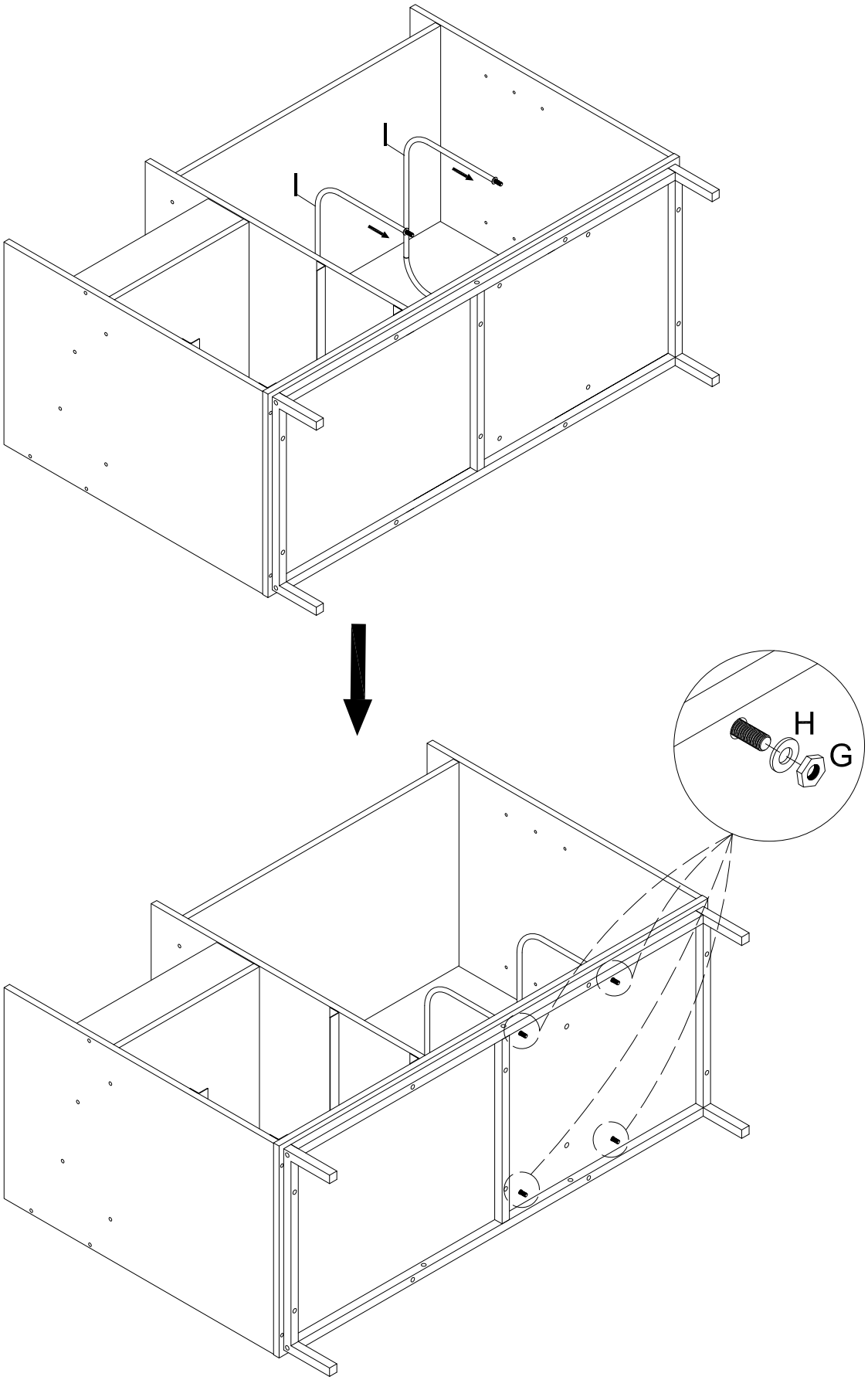

Ix2	Hx4	Gx4

16

Insert the laminated board holder into the board and place the laminated board on the laminated board holder.

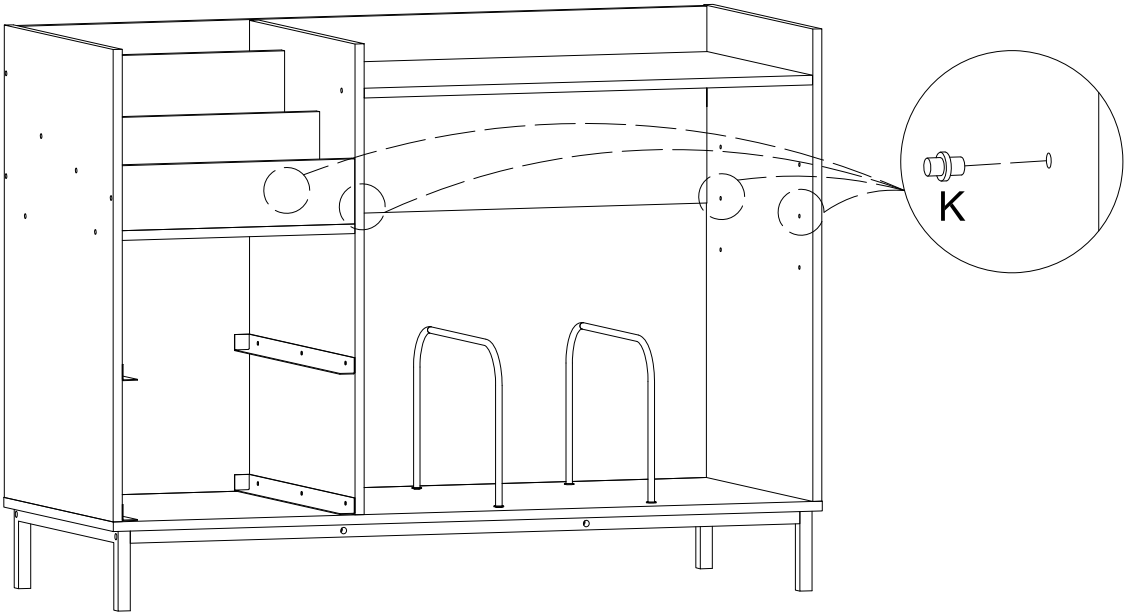

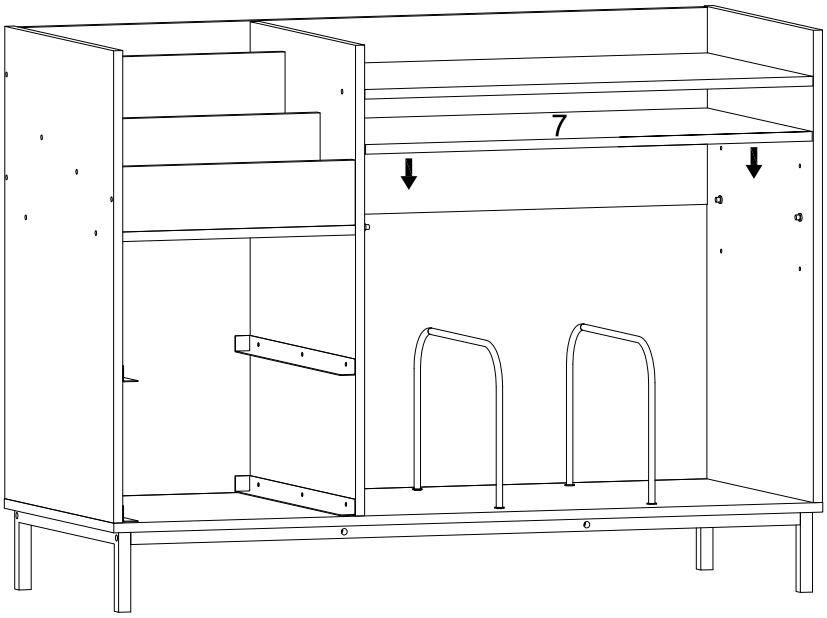

Kx4

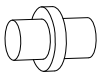

17

Pull two cloths together, place the padding inside and lock the handle with four nuts and padding.

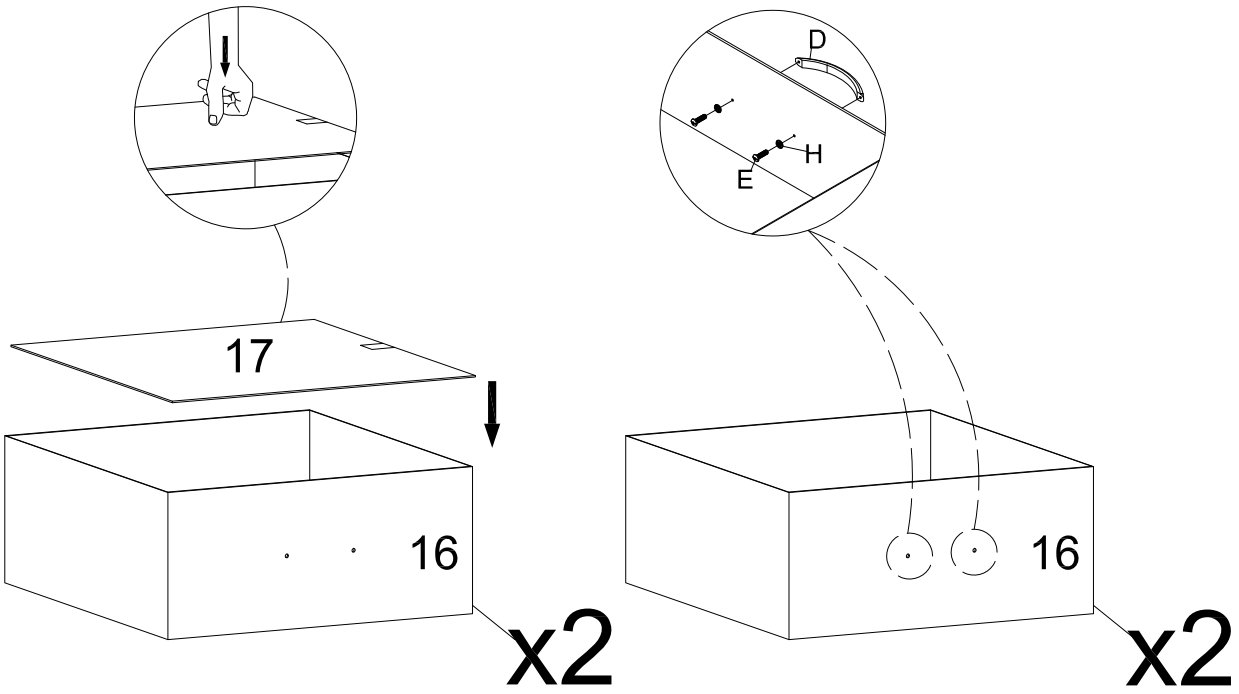

Dx2	Ex4	Hx4

18

Put the fabric drawer into the drawer holder.

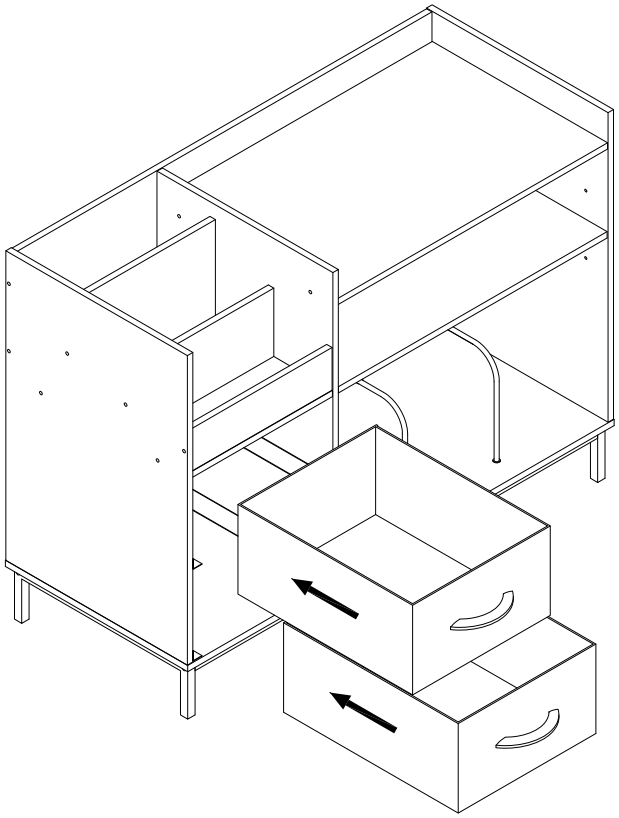

19

Attach visible holes with hole stickers.

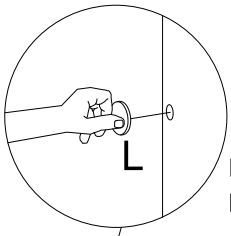

Hole position is hidden by
pasting a hole sticker !

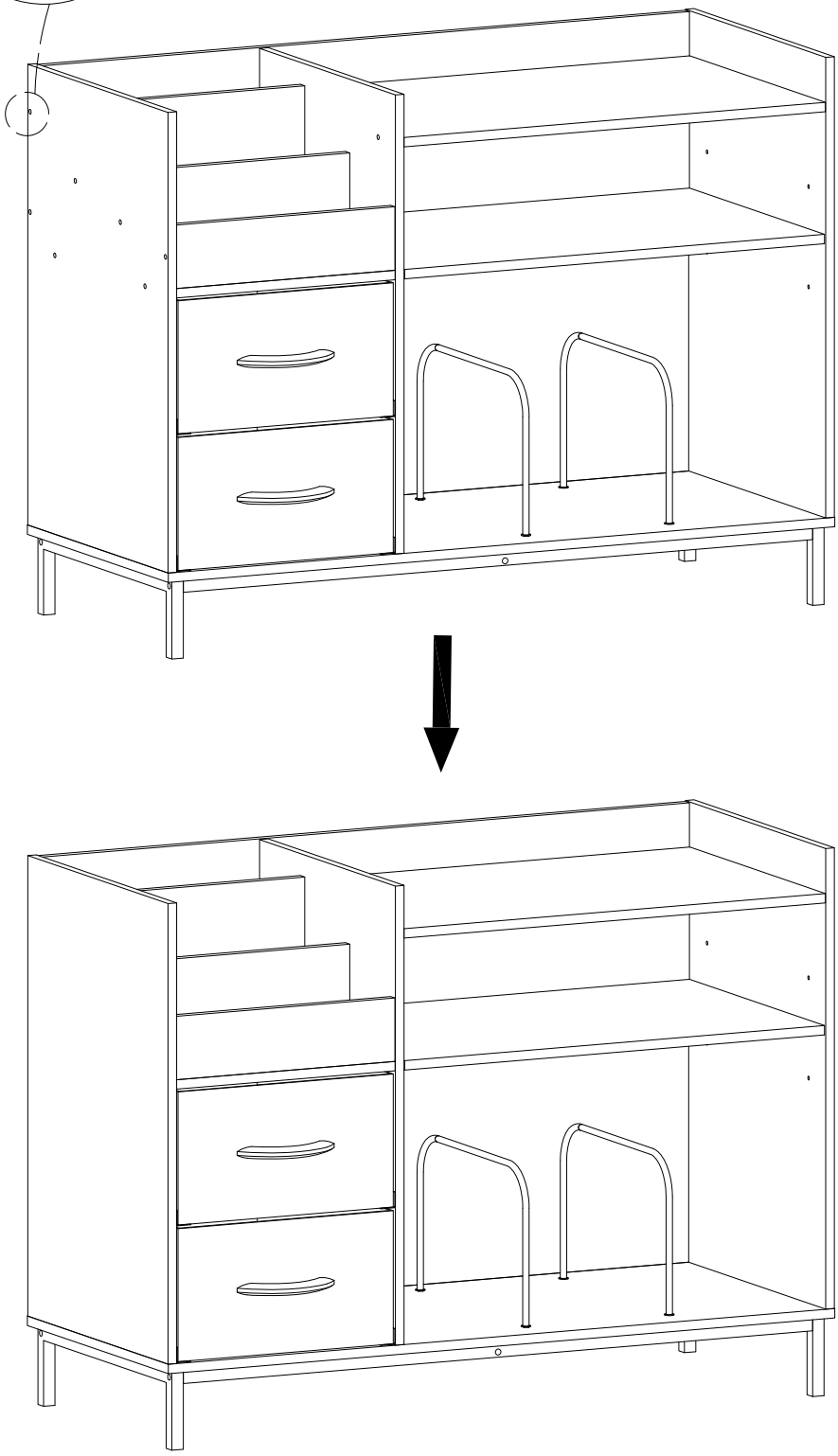

Lx30