ASSEMBLY INSTRUCTION



IMPORTANT
PLEASE READ BEFORE YOU CONTINUE FURTHER

THE PRODUCT YOU HAVE PURCHASED WILL GIVE YOU MANY YEARS OF SERVICE IF YOU FOLLOW THE GUIDELINES FOR ITS SAFE ASSEMBLY AND PERIODIC MAINTENANCE AND CLEANING.

DO NOT FOR ANY REASON USE A POWER TOOL TO ASSEMBLE THIS PRODUCT . ITS USE WILL INVALIDATE ANY CLAIM YOU MAY HAVE AND COULD MAKE THIS PRODUCT UNSAFE .

DEPENDING ON THE AMOUNT OF USE THIS PRODUCT RECEIVES IT MAY BE NECESSARY TO TIGHTEN UP THE FIXINGS FROM TIME TO TIME . THIS IS COMPLETELY NORMAL FOR ANY FLAT PACK FURNITURE

FOR CLEANING USE A DAMP CLOTH (NOT WET).DRY DUSTER AND NORMAL FURNITURE POLISH

USE OF POWER TOOLS TO ASSEMBLE THIS PRODUCT WILL INVALIDATE ANY

CLAIM AND MAY DAMAGE THIS PRODUCT MAKING IT UNSAFE

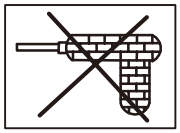

PART LIST

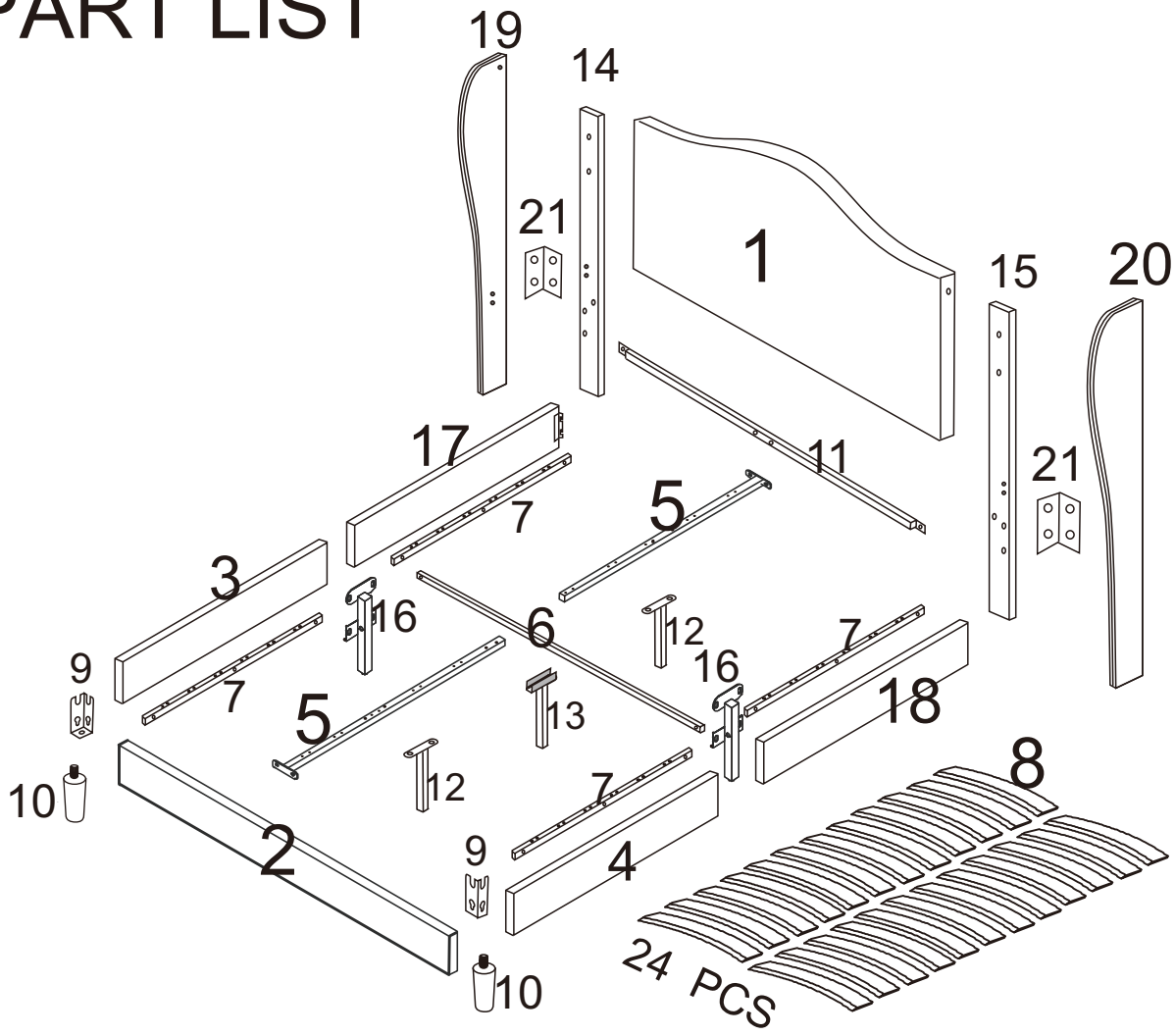

HARDWARE LIST

LABEL	PICTURE	DESCRIPTION	QTY
A		M8*20 BOLT	30 PCS
B		M8*45 BOLT	24 PCS
C		NUT	10 PCS
D		M8 WASHER	38 PCS
E	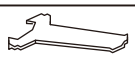	SOCKET SPANNER	1 PC
F		ALLEN KEY	1 PC
G			24 PCS
H			12 PCS
I		M8*30 BOLT	2 PCS

STEP 1

B 4 PCS M8*45 BOLT	F 1 PC ALLEN KEY
D 4 PCS M8 WASHER	

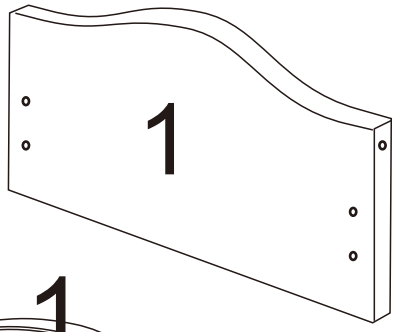

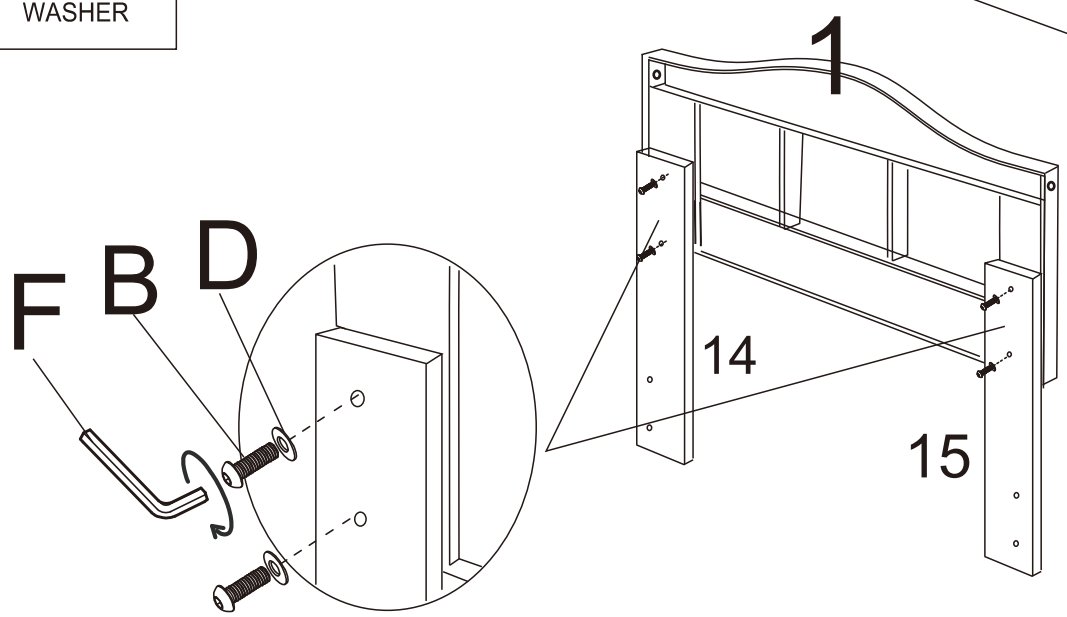

STEP 2

E 1 PC SOCKET SPANNER	
C 2 PCS NUT	

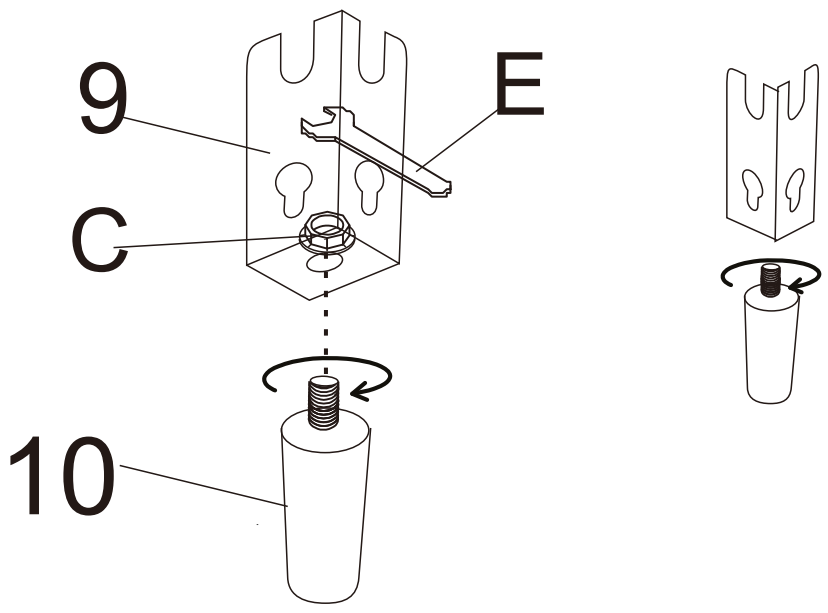

STEP 3

A 4 PCS M8*20 BOLT	
B 12 PCS M8*45 BOLT	
D 12 PCS M8 WASHER	
F 1 PC ALLEN KEY	

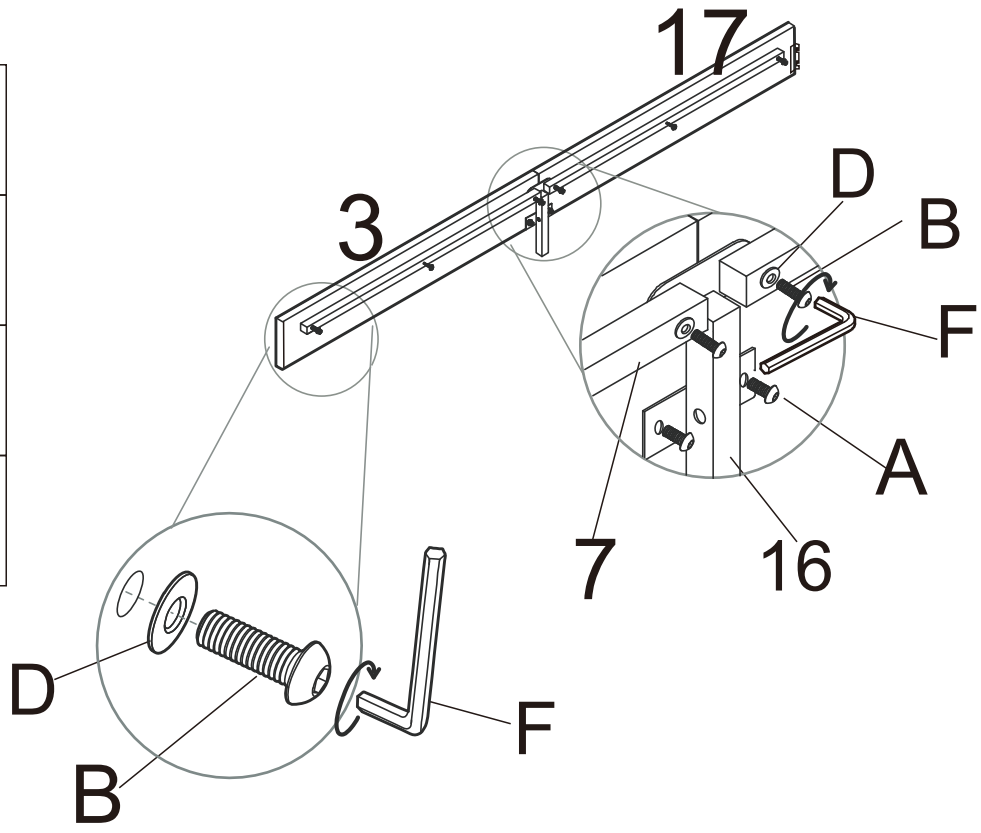

STEP 4

A 10 PCS M8*20 BOLT	D 4 PCS M8 WASHER
F 1 PC ALLEN KEY	

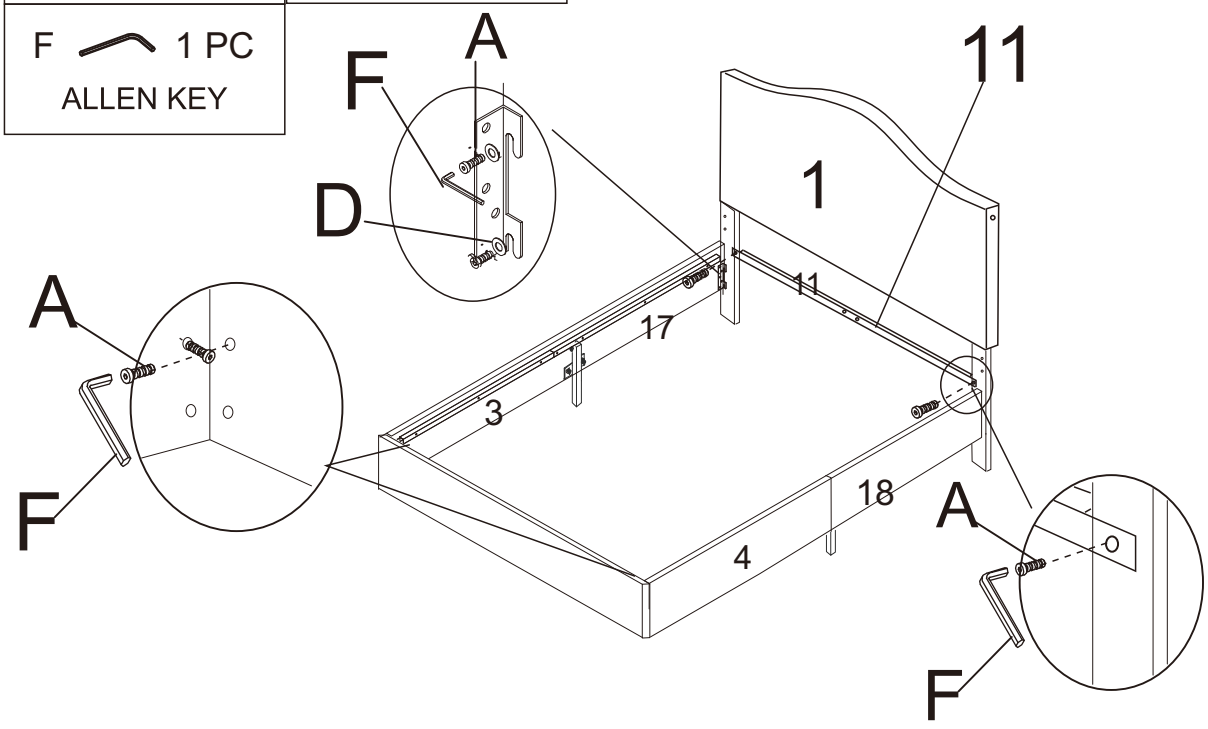

STEP 5

A	4 PCS
M8*20	BOLT
F	1 PC
ALLEN KEY	

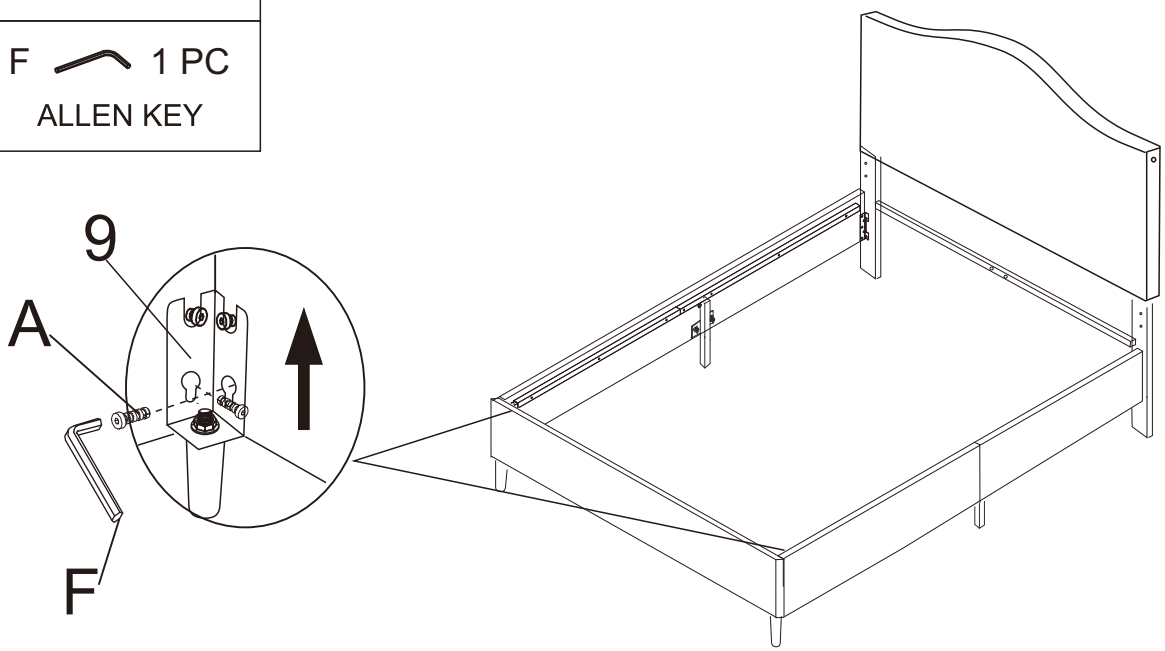

STEP 6

B	6 PCS
M8*45	BOLT
D	6 PCS
M8	WASHER
F	1 PC
ALLEN KEY	
E	1 PC
SOCKET SPANNER	
C	6 PCS
NUT	

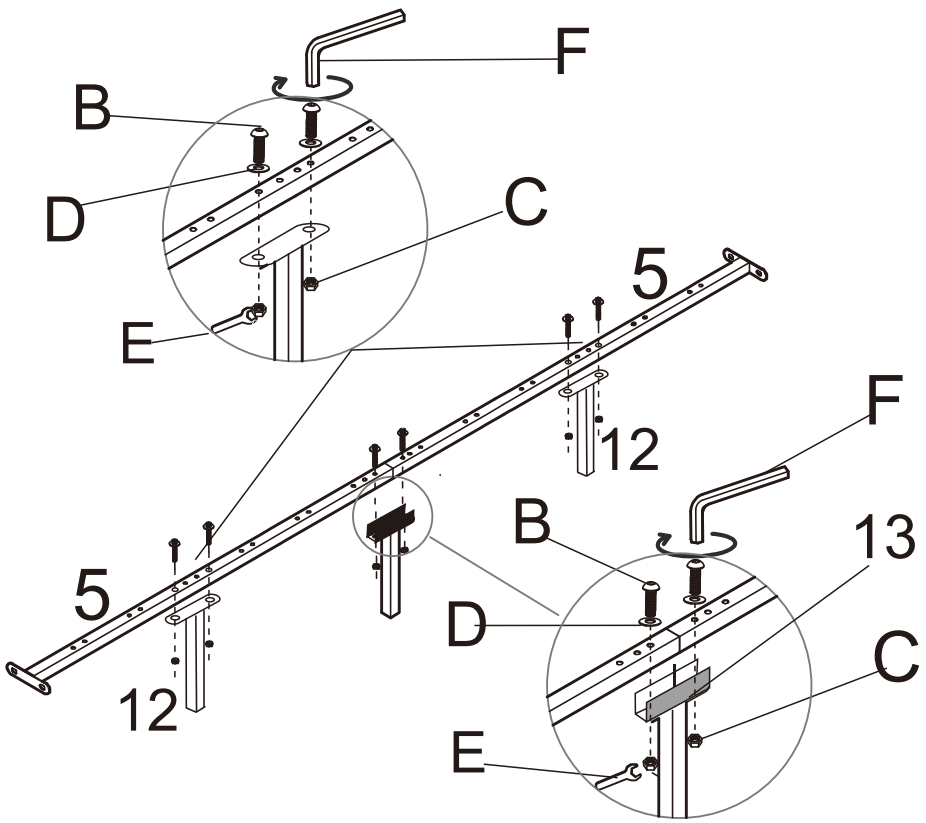

STEP 7

A	4 PCS M8*20 BOLT
B	2 PCS M8*45 BOLT
D	2 PCS M8 WASHER
F	1 PC ALLEN KEY
E	1 PC SOCKET SPANNER
C	2 PCS NUT

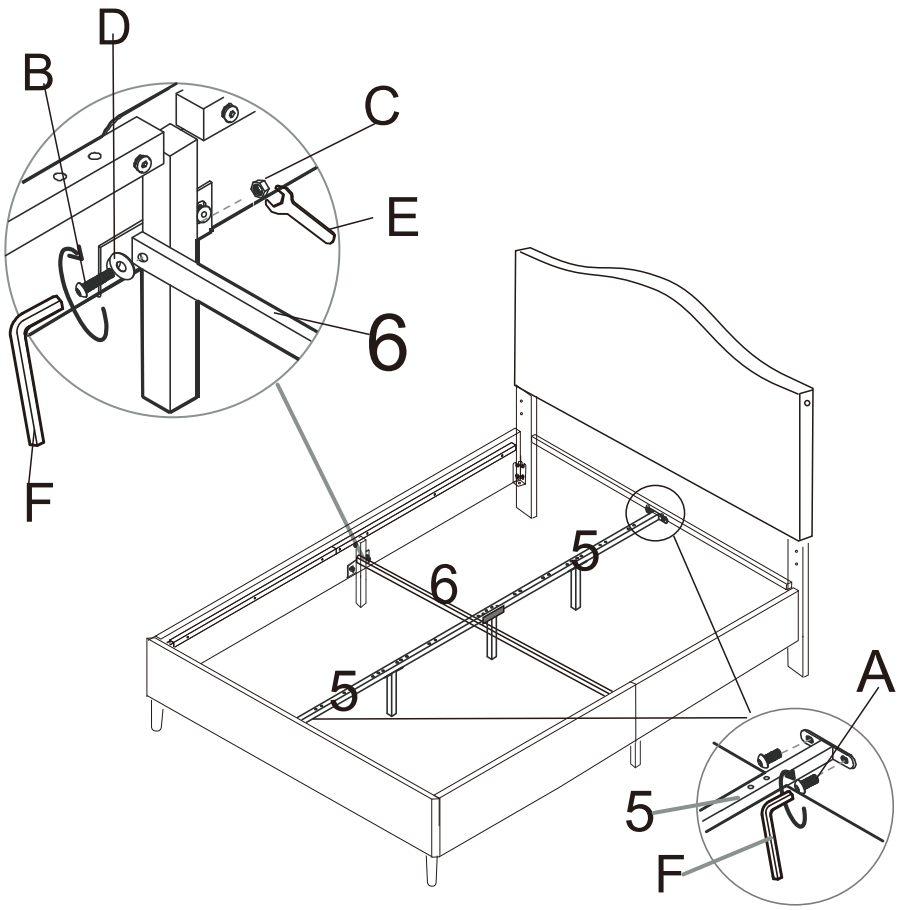

STEP 8

G	24 PCS
H	12 PCS

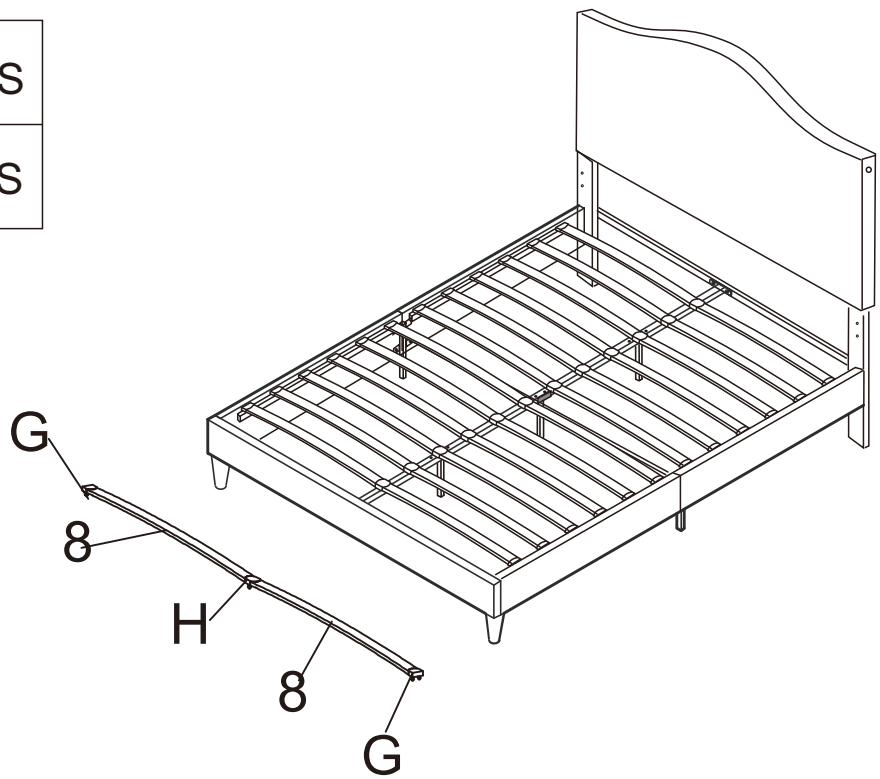

STEP 9

A	M8*20 8 PCS
I	M8*30 2 PCS
F	1 PC
D	M8 10 PCS

