ASSEMBLY INSTRUCTIONS

PLEASE KEEP THIS FOR FUTURE REFERENCE

Prior to assembly, please read these instructions carefully. We recommend you carry out assembly on a soft surface to avoid scratching any surfaces.

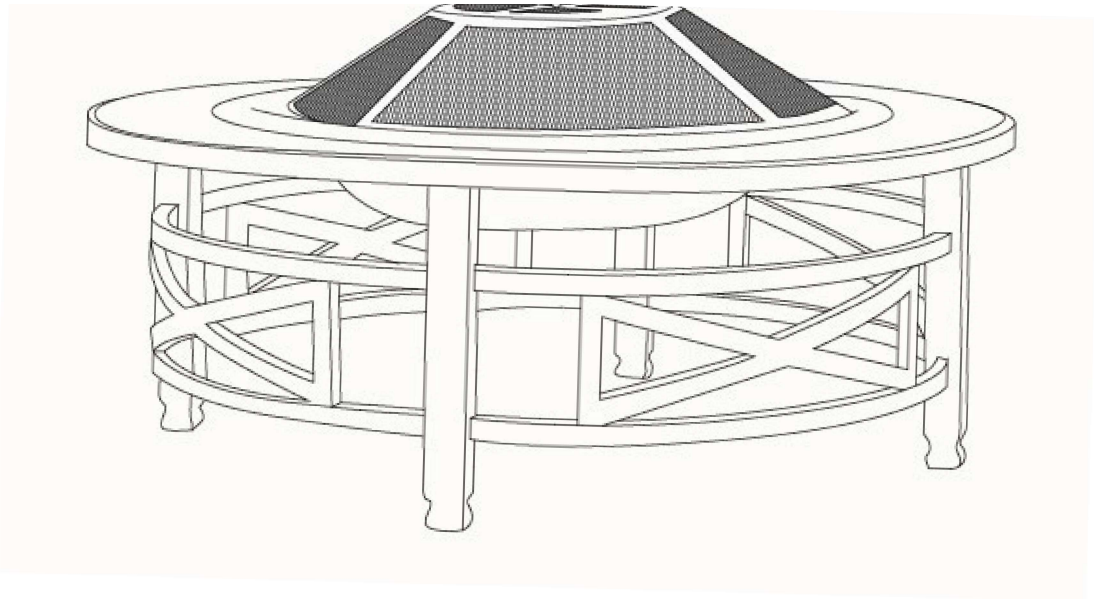

WARNING

Please do not destroy, damage or dispose of any packaging until you have completely satisfied yourself that this product meets with your satisfaction and is in perfect condition. Doing so will result in problems returning the item to your supplier.

Warning and Caution :

- FOR OUTDOOR USE ONLY. NEVER LEAVE FIRE UNATTENDED.
- Supervise Children & Pets when the fire is in use.
- DO NOT use this unit on a wooden deck or on any combustible surface such as dry grass, leaves, mulch etc and place it no closer than 2 feet from walls during use.
- Burn only wood or charcoal in the firepit. DO NOT use gasoline or kerosene to start the fire in your fireplace. Light the fire using a match or lighter.
- DO NOT touch the outside of your firepit while it is in use.
- DO NOT extinguish your firepit with water. The water may cause distortion,rust or flaking paint. Use a fire extinguisher or allow the attended fire to die out on it's own.
- DO NOT use a fire extinguisher unless in an emergency. Allow the attended fire to die out on it's own.
- DO NOT use in inclement weather.

Care and Maintenance :

- To extend the life of your firepit, clean the bowl after each use and cover the unit to protect it from the elements. Please ensure the firepit has completely cooled down before using the protective cover.
- To maintain the coating colour, cover the bottom of the fire bowl with small stones or sandstones before each use.
- To maintain the finish, clean the surface using a soft cloth. Do not use a metal brush.
- If metal is scratched, the fireplace may need touch up paint. Ask your local paint store representative which paint is best for your type of fireplace. To prevent rusting, coat the exposed surface immediately. In most cases, we recommend using a steel brush on the affected area before spray coating with a quality anti rust paint.
- Although firepits in general do well in adverse weather conditions, store it in an enclosed structure during longer periods of non use.

WARNING

Please do not destroy, damage or dispose of any packaging until you have completely satisfied yourself that this product meets with your satisfaction and is in perfect condition. Doing so will result in problems returning the item to your supplier.

Parts List

Part	Description	Image	Qty
A	Mesh Cover	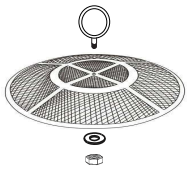	1
B	BBQ Grill		1
C	Log Grate	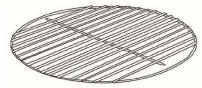	1
D	Fire Bowl		1
E	Table Top	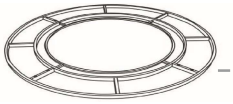	1
F	Leg	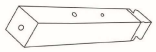	4
G	Leg Support	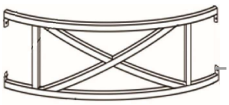	4
H	Rain Cover		1
I	Tiles		8
T1	Bolt (1/4" x 5/8")		8
T2	Bolt (1/4" x 5/8")		16
U	Washer		24
V	Nut		24
X	Allen Key	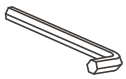	1
Y	Wrench		1
Z	Poker		1

IMPORTANT NOTICE!

When assembling the frame & legs of the fire pit during stages 1 to 3 :

PLEASE DO NOT FULLY TIGHTEN BOLTS (PARTS T1 & T2) UNTIL THE COMPLETE FRAME & LEGS ARE FULLY ASSEMBLED.

THIS WILL HELP WITH ALIGNING THE PARTS FOR EASIER ASSEMBLY.

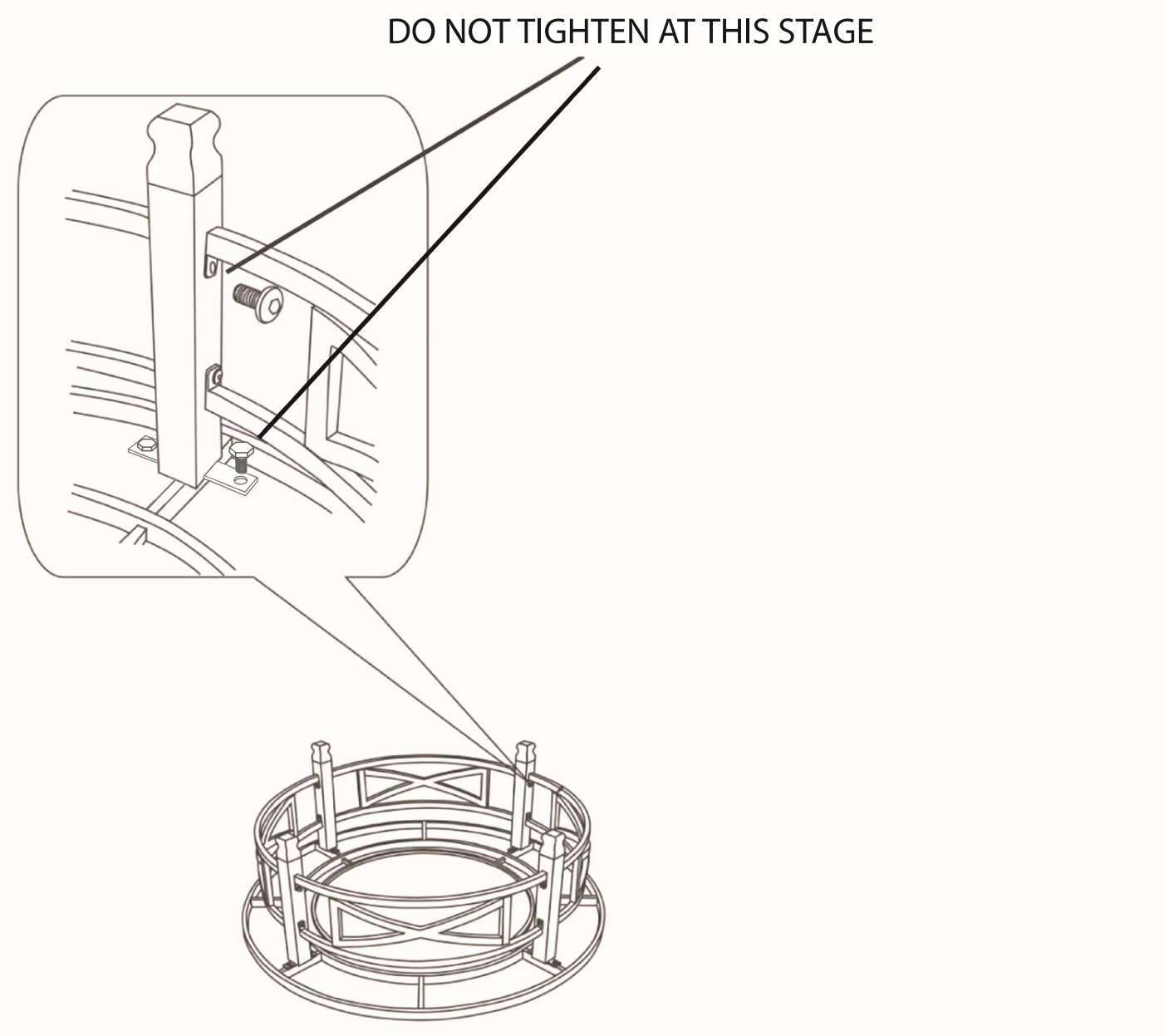

ONCE THE FRAME & LEG ASSEMBLY IS FULLY COMPLETE, BOLTS(T1 & T2) CAN BE FULLY TIGHTENED

Tool required:Spanner(Y)and Poker(Z) provided in package.

DO NOT FULLY TIGHTEN THE BOLTS BEFORE ASSEMBLING ALL THE PARTS
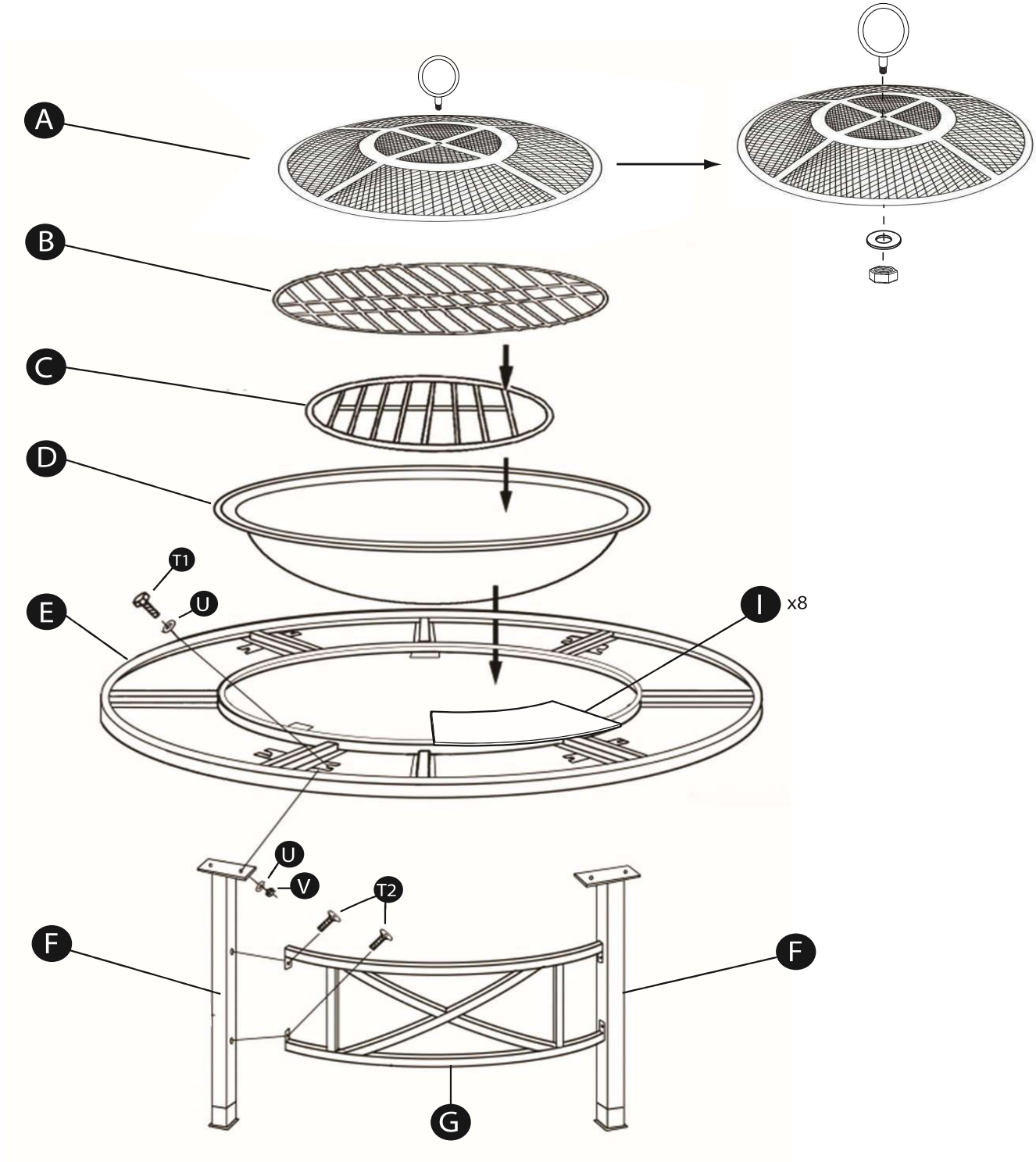
1. Connect legs(F) with leg supports(G) with 8xbolts(T1), 8xwasher(U) and 8xnuts(V).
2. Connect 4 table top parts(E) together with 8xbolts(T1), 8xwasher(U) and 8xnuts(V).
3. Put table top(E) upside down, attach legs(F) to table top(E) with 8xbolts(T2), 8xwasher(U) and 8xnuts(V).
4. Turn the assembly over on its legs.
5. Place firebowl (D) onto the assembled frame, place log grate (C) & BBQ grill (B) into firebowl (D), then put mesh cover (A) on top.
   screw handle into mesh cover and secure with Nut.