Montageanleitung instructions de montage Assembly Instructions instrucciones de montage

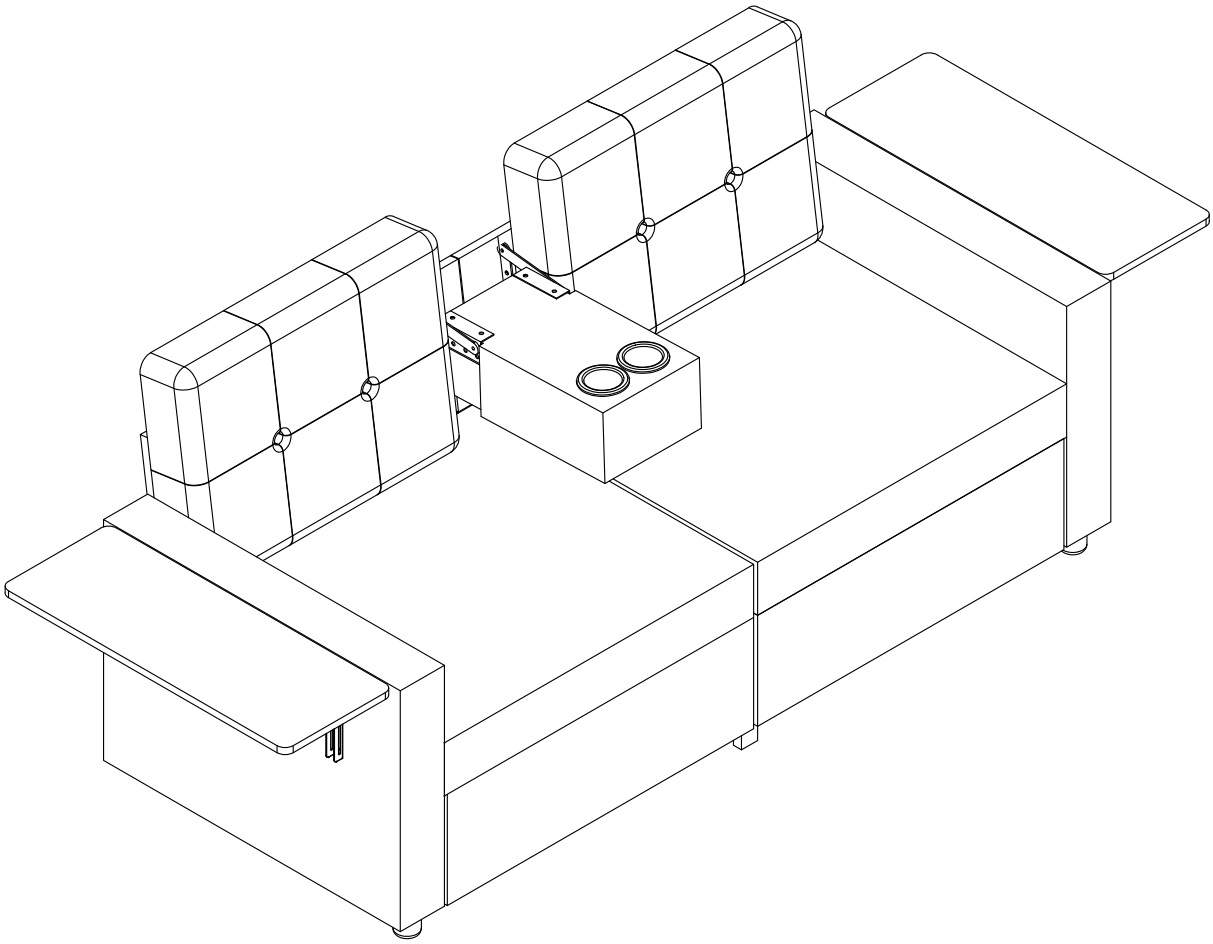

TIPS

1.This product is divided into 2 parcels for delivery. They may not arrive at the same time. Please wait patiently.

2.Please read the instructions fully before assembly. These instructions include important information which could ensure correct assembly. We have been working on providing high quality products for you. However, in the rare instance that your product is defective,missing parts or there are some issues, please don't hesitate to contact our customer service to submit parts requirements, assembly suggestion,or warranty claims, and we will give the best solution as soon as possible. If necessary, we need you to provide some more clear pictures of the issue.

3.Insert the screws in holes and tighten the screws, but not too tight, 70%~80% is ok, finally tighten all the screws. If some issues happened that some screws can not target to the hole or some parts are difficult to install, please adjust the tightness of the screws.

4.2 people are recommended to finish.

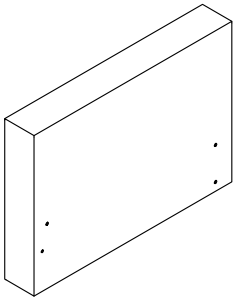

1
X1

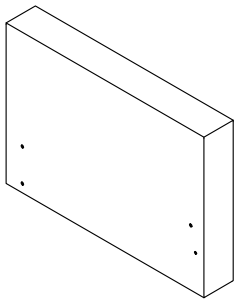

2
X1

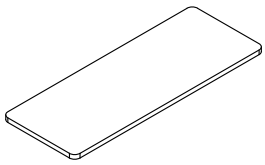

3
X2

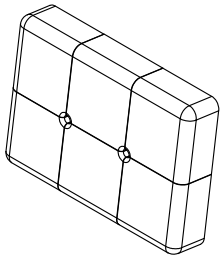

4
X2

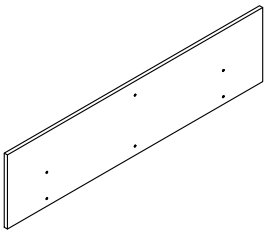

5
X2

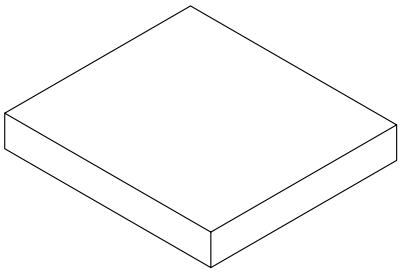

16
X2

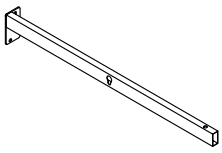

21
X1

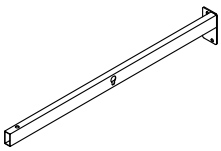

22
X1

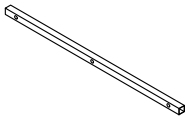

27
X2

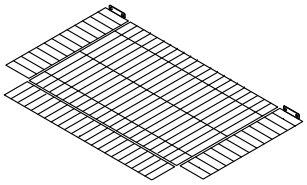

7
X2

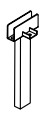

8
X1

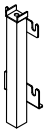

9
X1



10
X4



11
X8

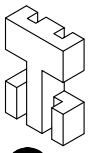

12
X4

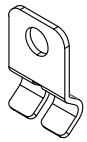

13
X2

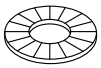

14
X4

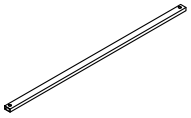

15
X1

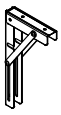

17
X4

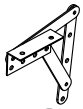

18
X1



19
X1

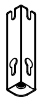

20
X2



23
X1

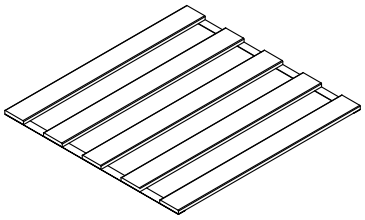

24
X2

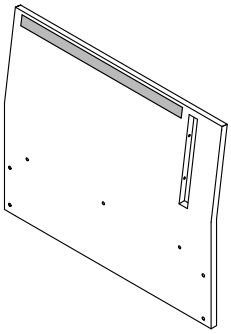

25
X1

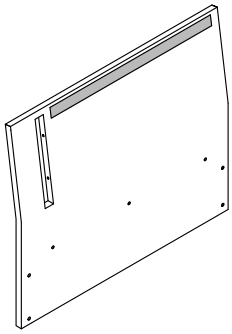

26
X1

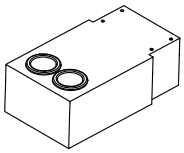

28
X1

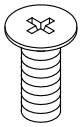

A
M4*12
X8+1

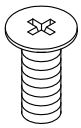

B
M4*20
X12+2

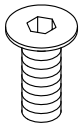

C
M6*15
X20+2

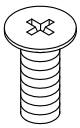

D
M6*20
X16+2

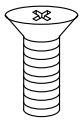

E
M6*20
X4+1

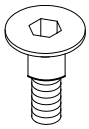

F
M6*20
X2+1

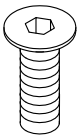

G
M6*25
X2+1

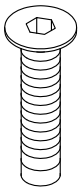

H
M6*30
X6+1

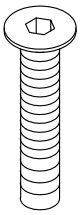

I
M8*45
X2+1

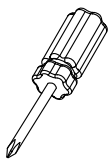

J

X1

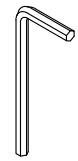

K
M5
X1

OVERVIEW

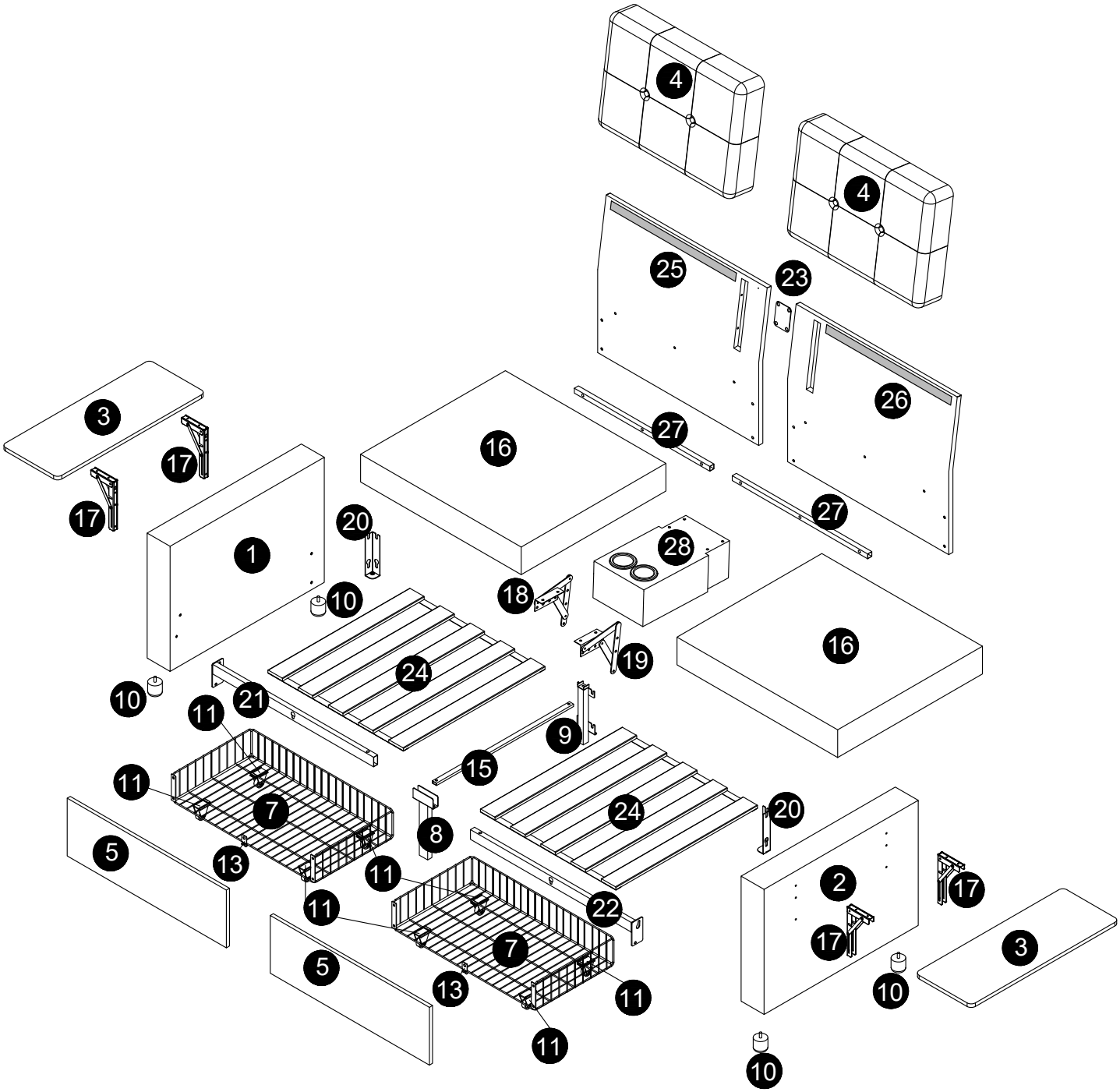
4
4
25
23
26
3
17
17
16
27
27
20
1
28
10
18
16
24
19
10
21
11
9
15
11
7
24
20
5
8
13
11
2
17
11
22
17
3
7
5
13
11
10
11
10

Assembly Instruction

1

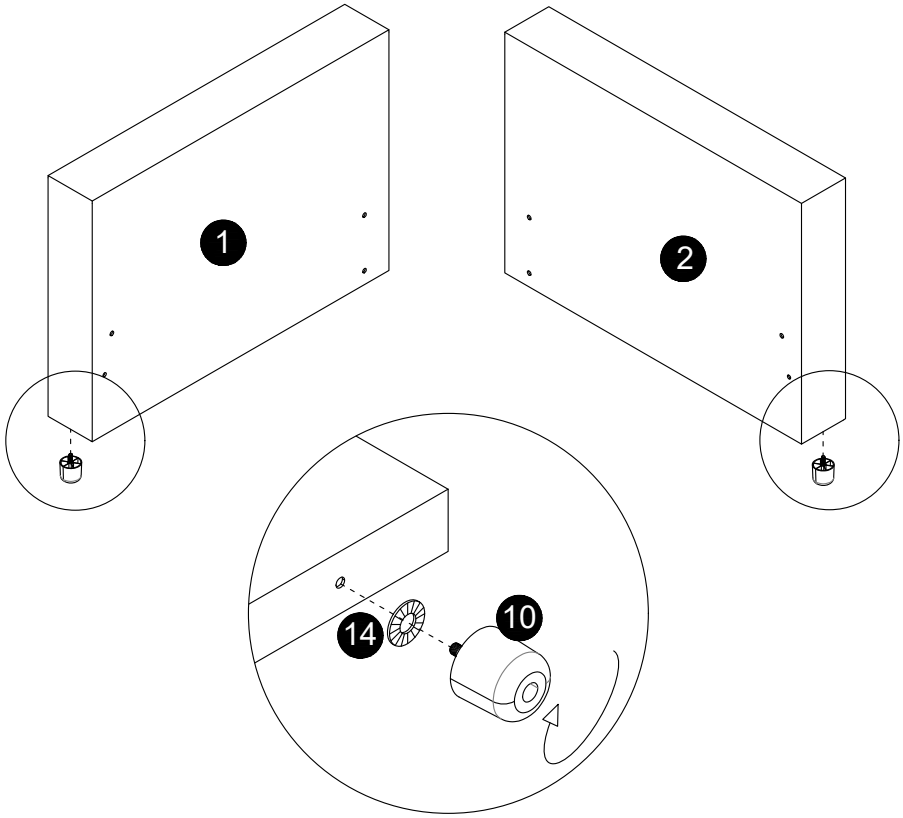

2

B M4*20 X12

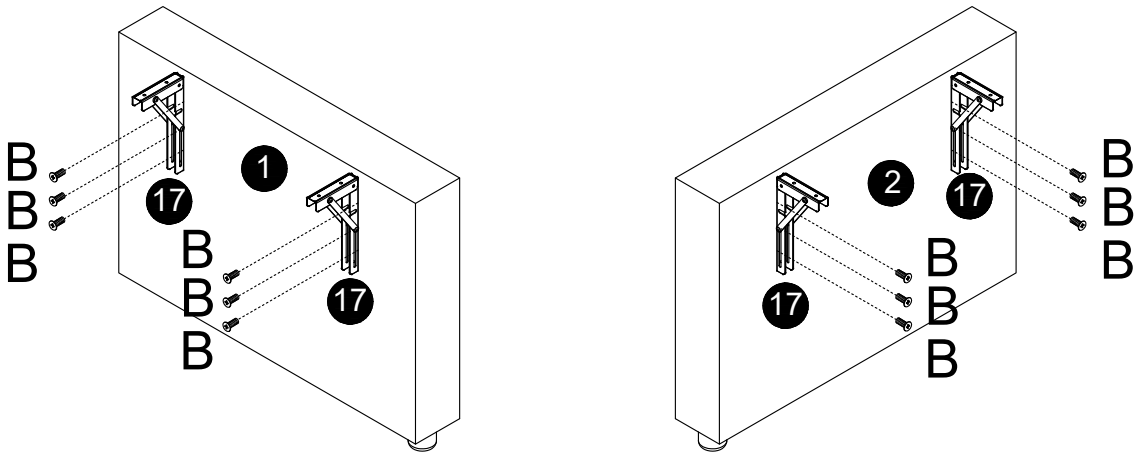

Assembly Instruction

3

A M4*12



X8

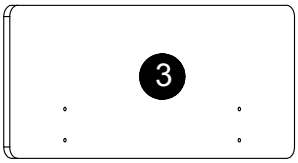

X2

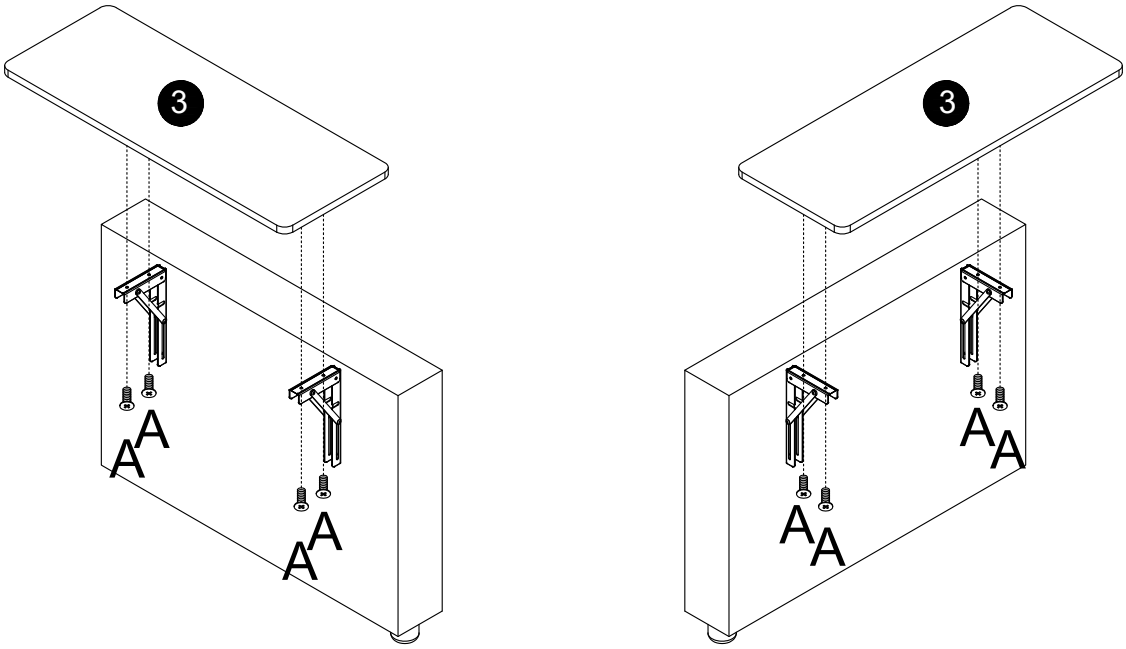

4

D M6*20



X4

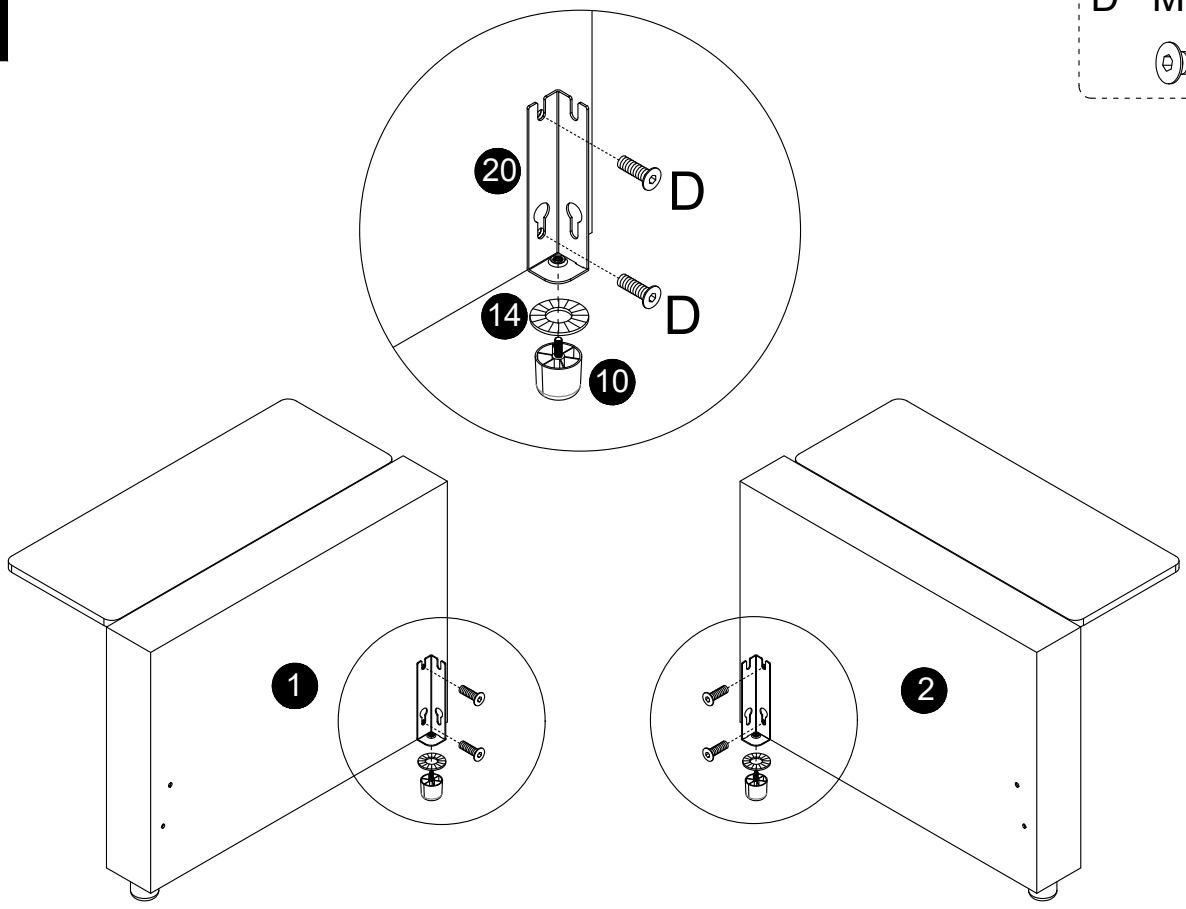

Assembly Instruction

5

I M8*45

X2

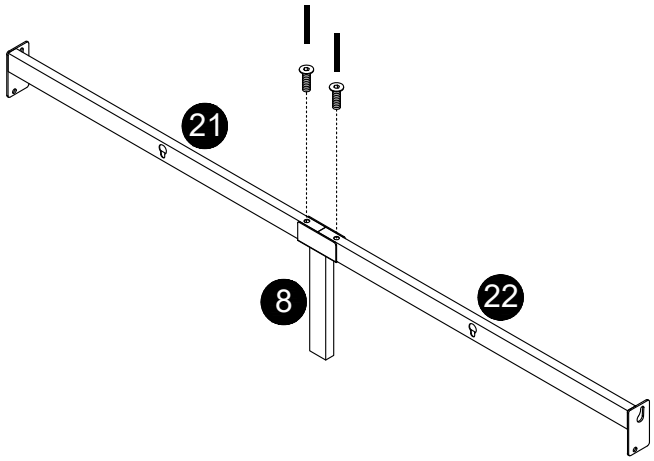

6

D M6*20

X4

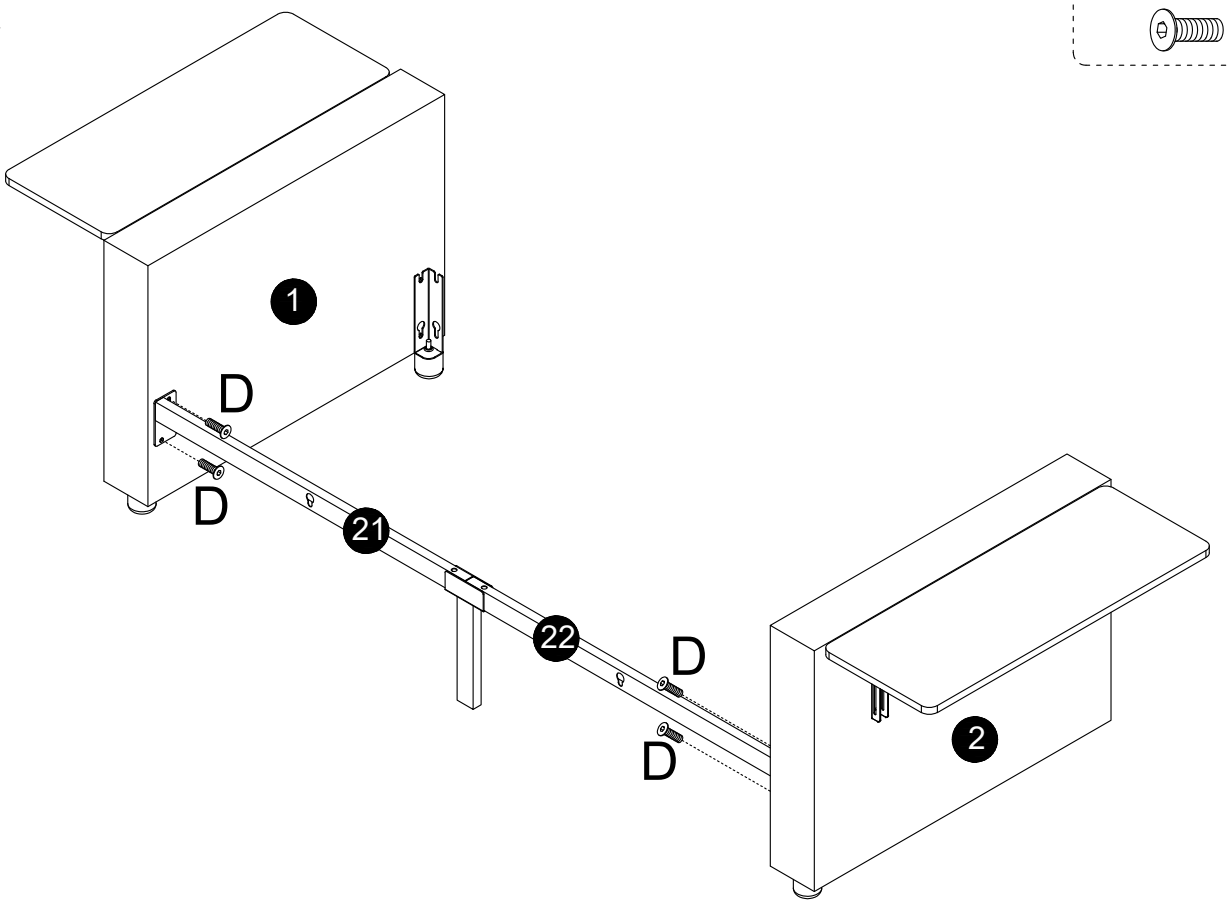

Assembly Instruction

7

D M6*20 X4

H M6*30 X6

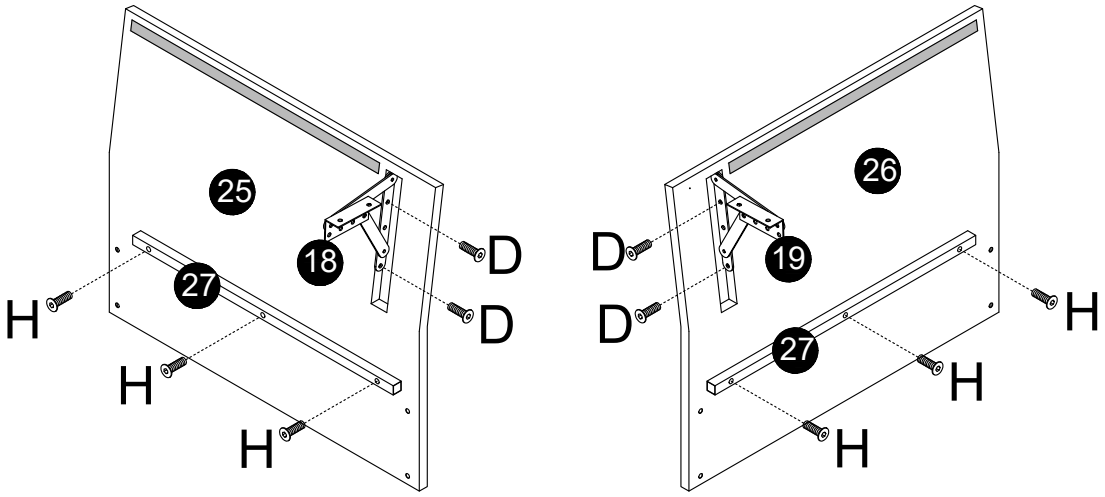

8

C M6*15 X4

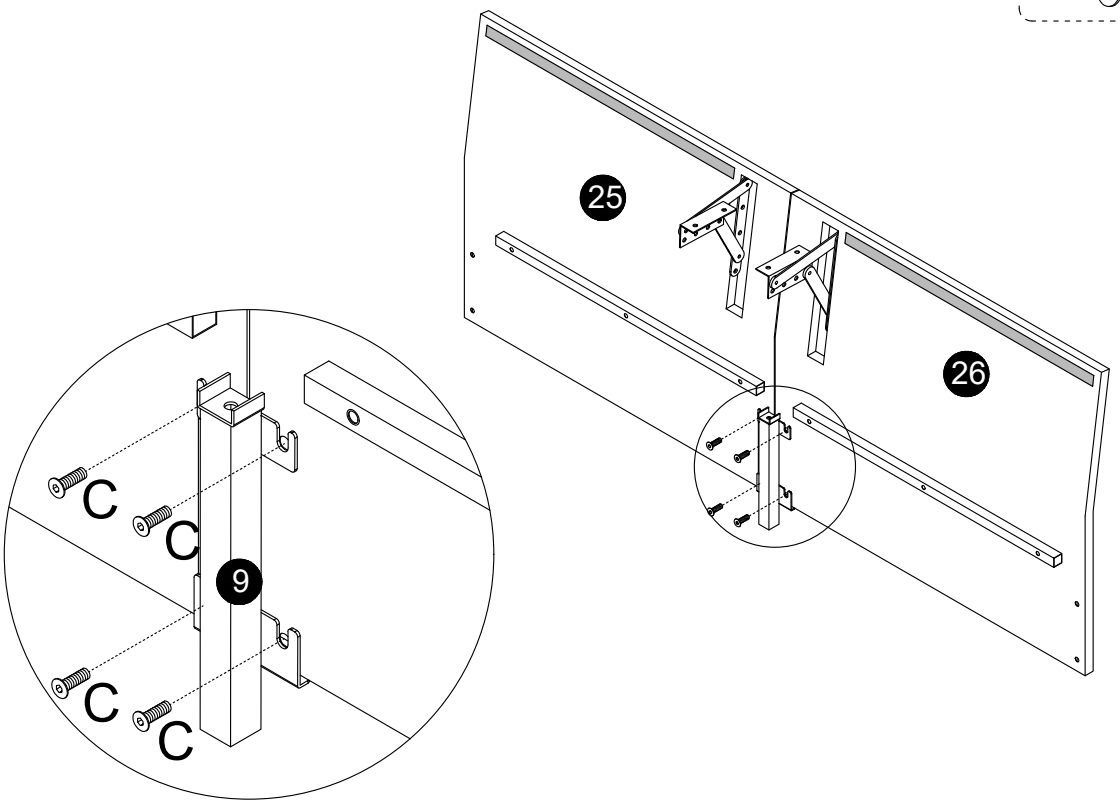

Assembly Instruction

9

C M6*15 X4

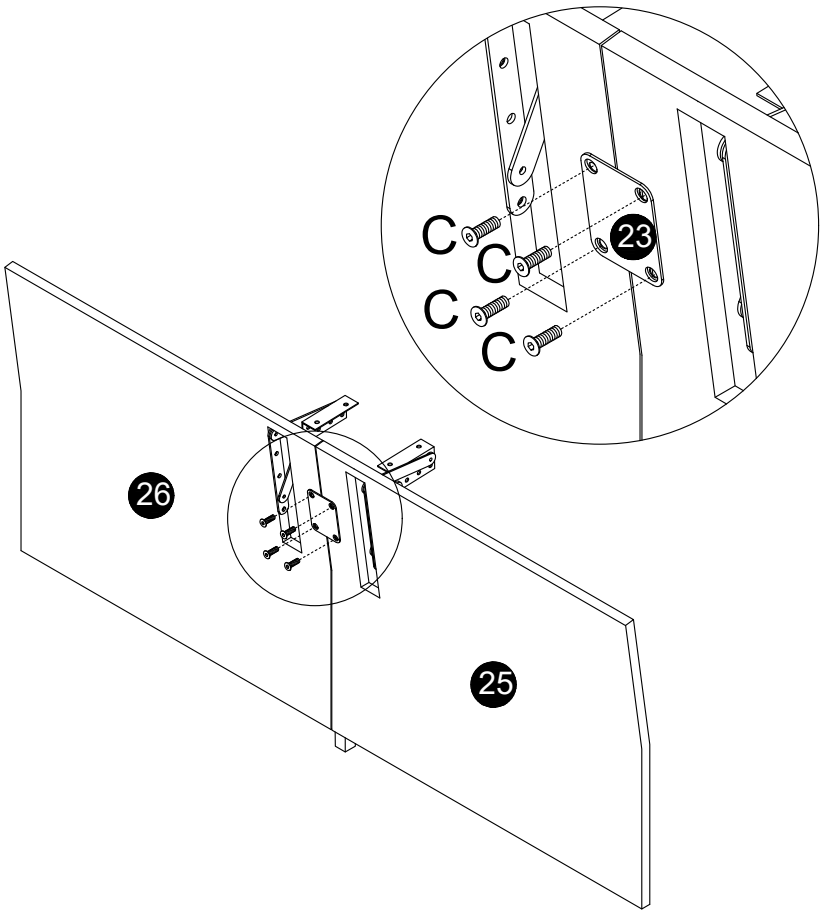

10

D M6*20 X4

G M6*25 X2

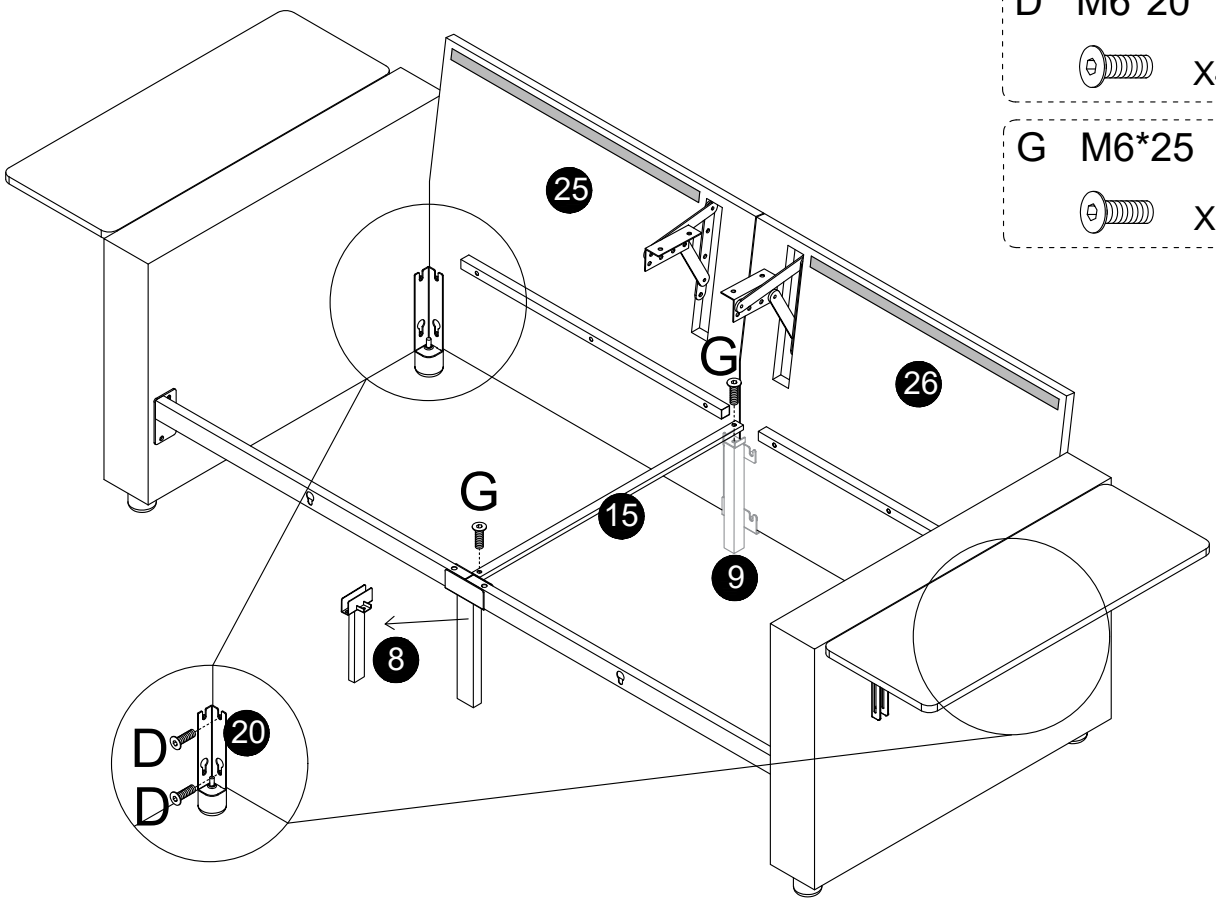

Assembly Instruction

11

E M6*20 X4

F M6*20 X2

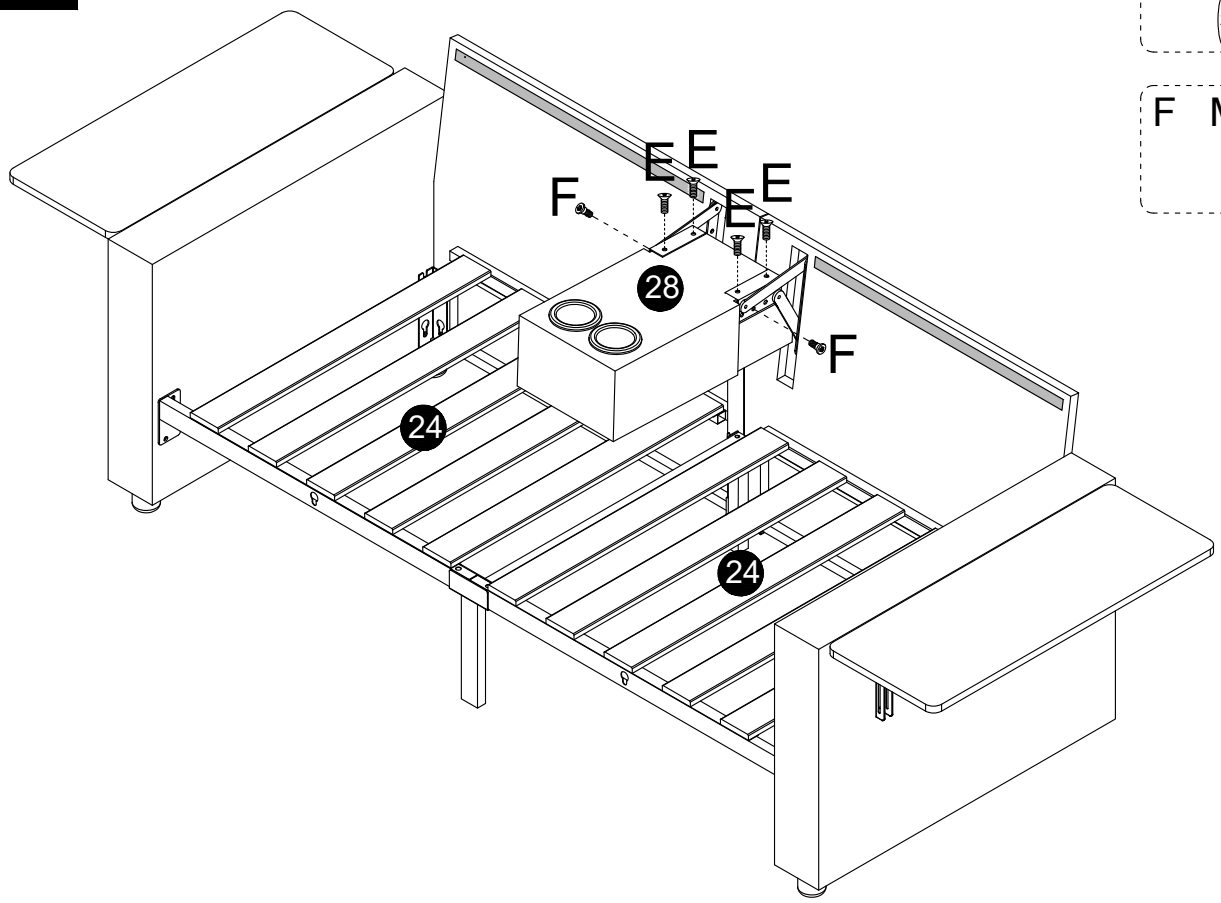

12

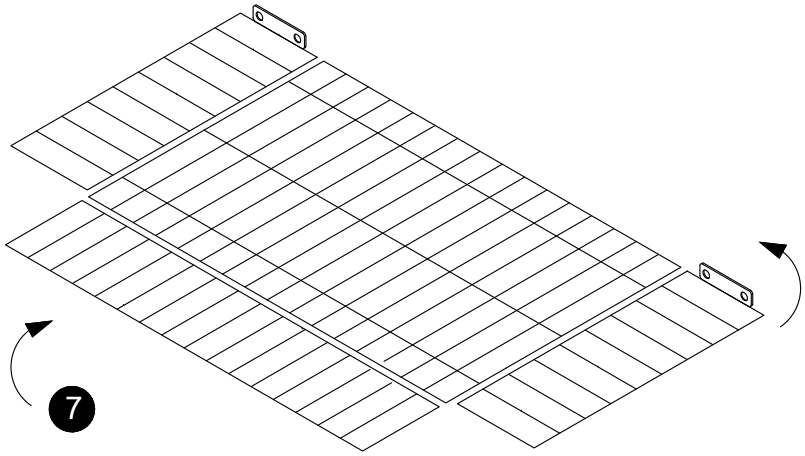

X2

Assembly Instruction

13

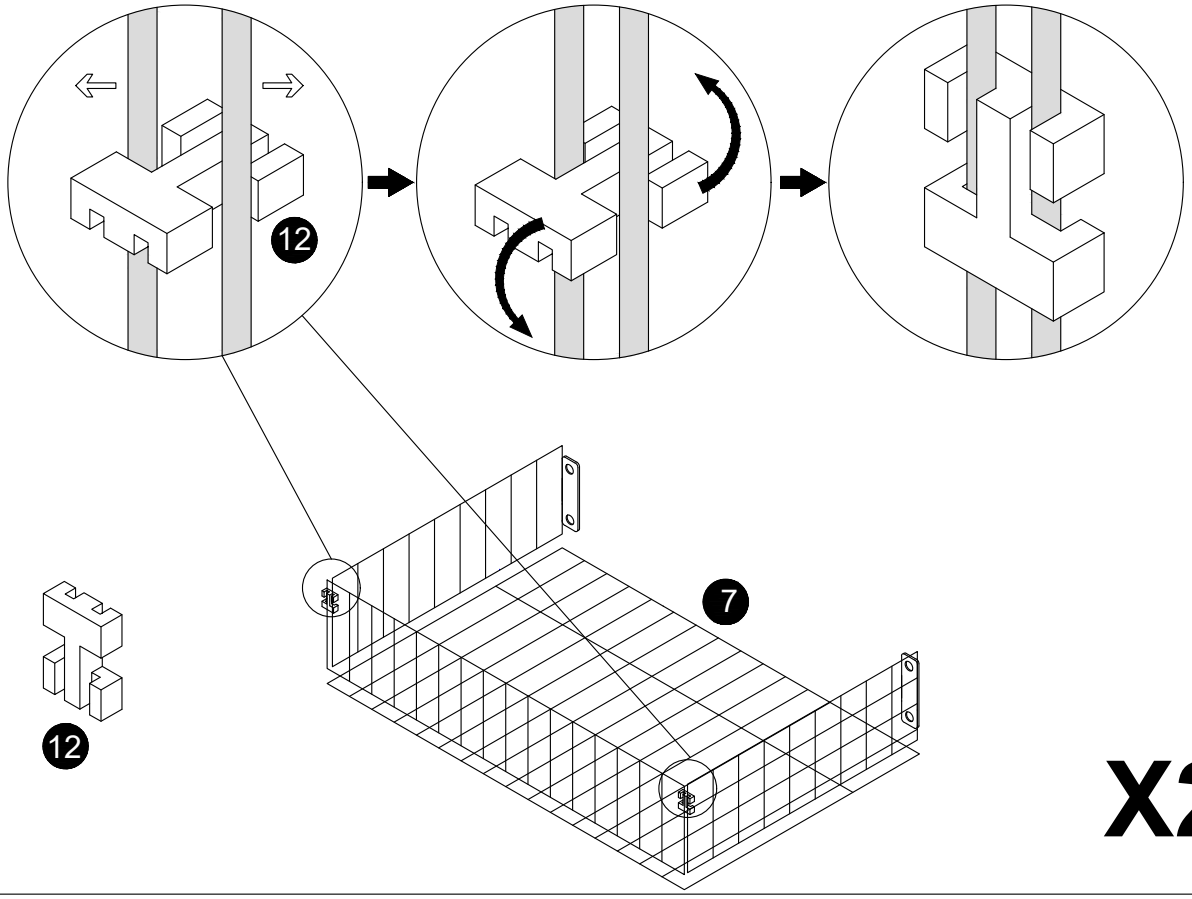

X2

14

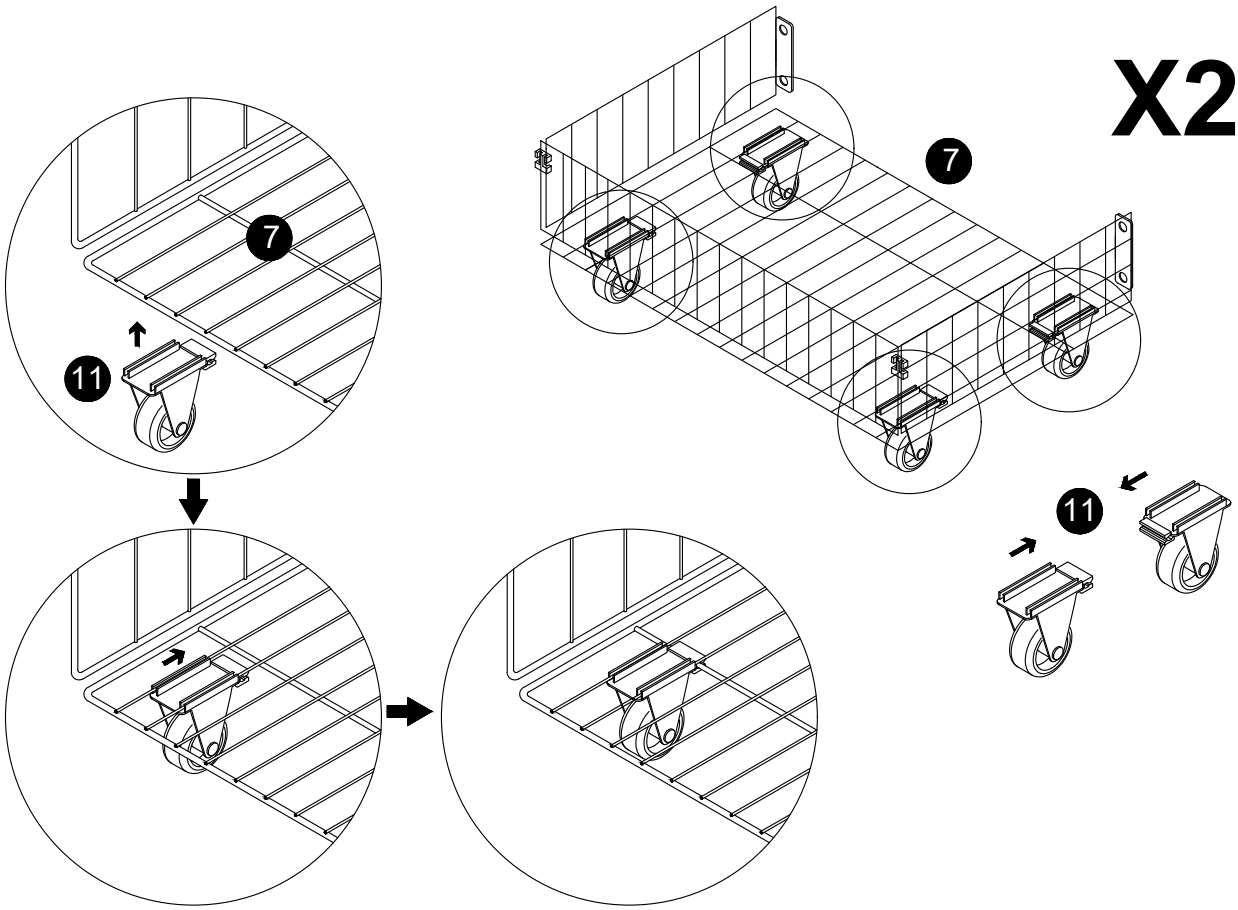

X2

Assembly Instruction

15

C M6*15

 X2

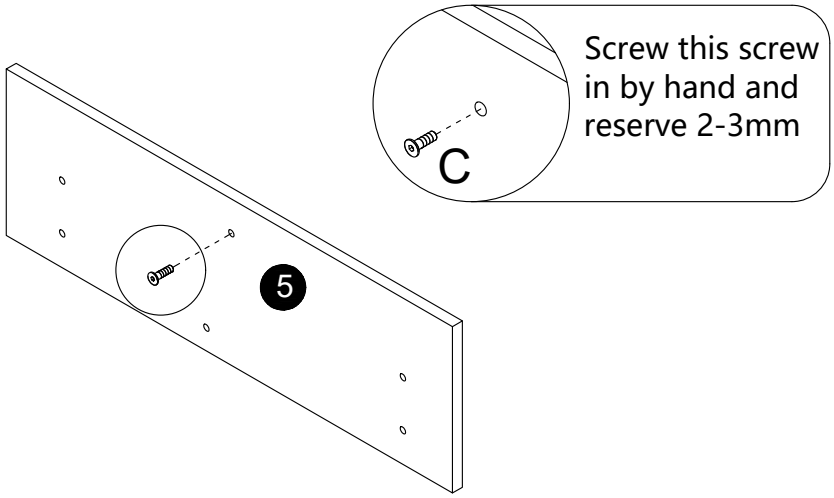

X2

16

C M6*12

 X10

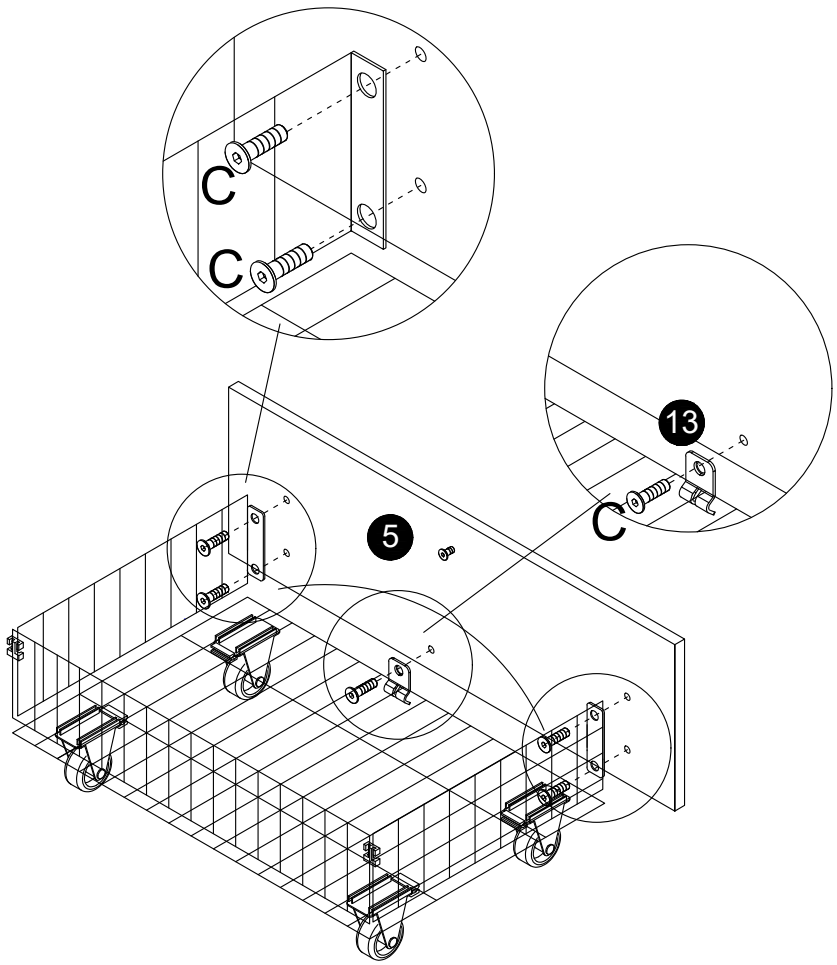

X2

Assembly Instruction

17

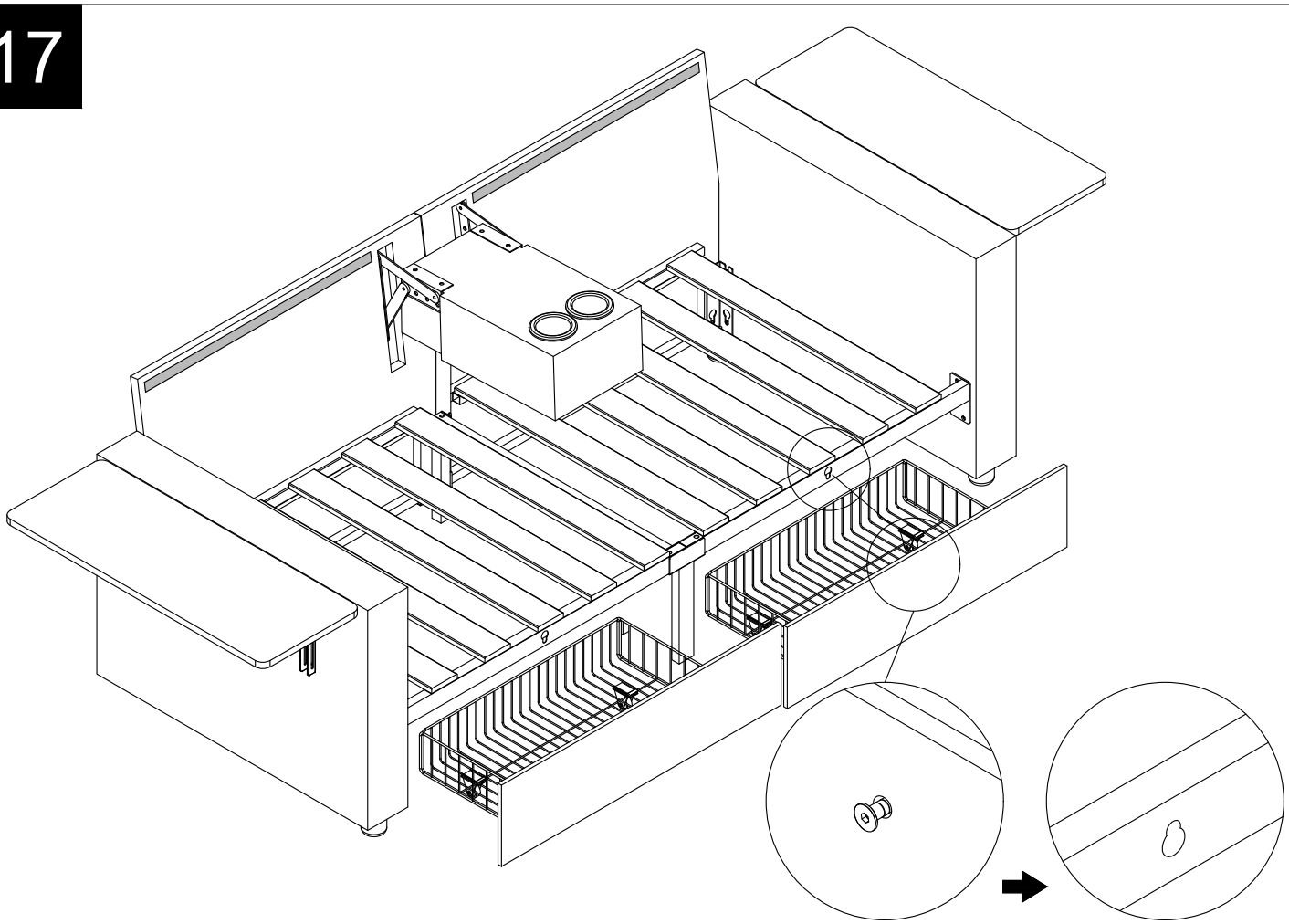

18

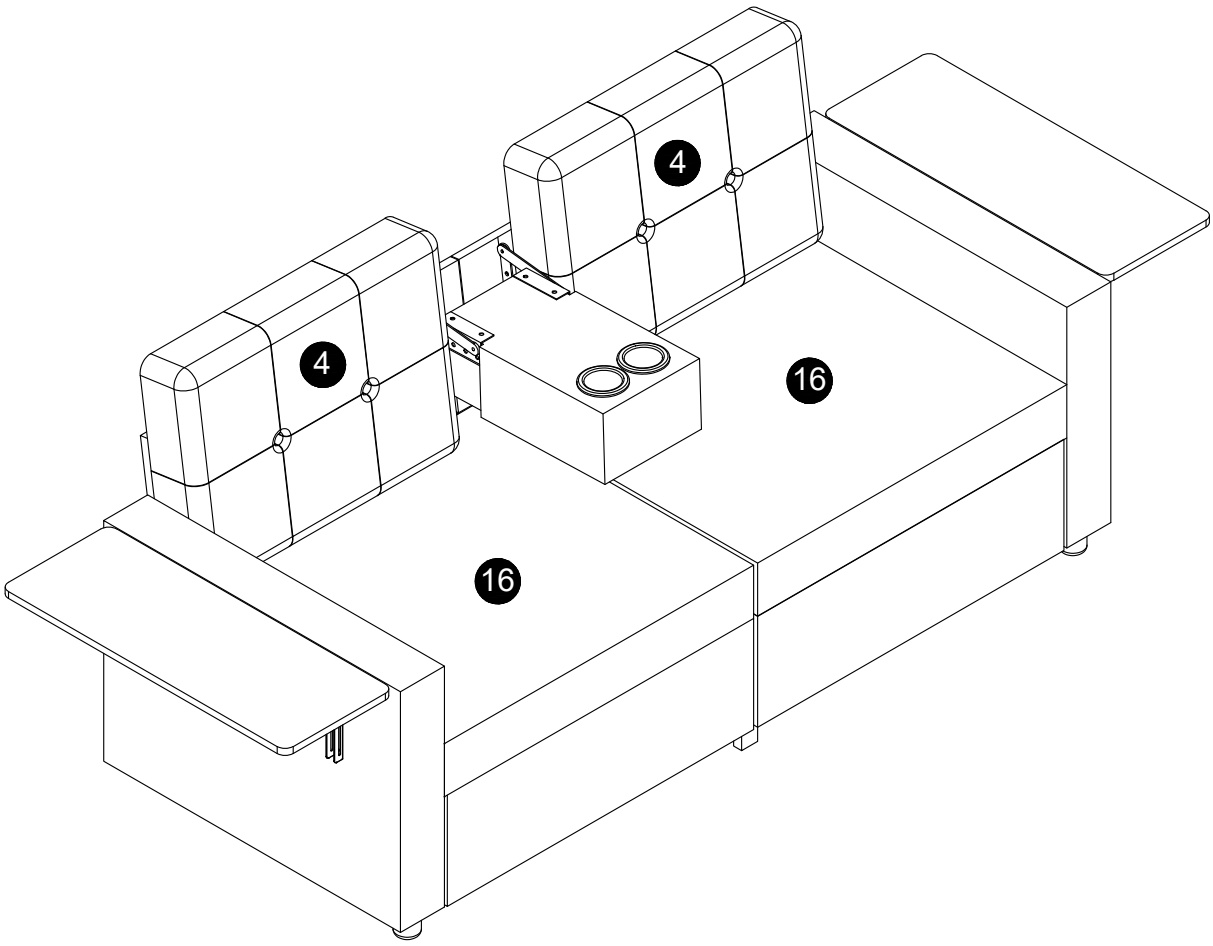

19

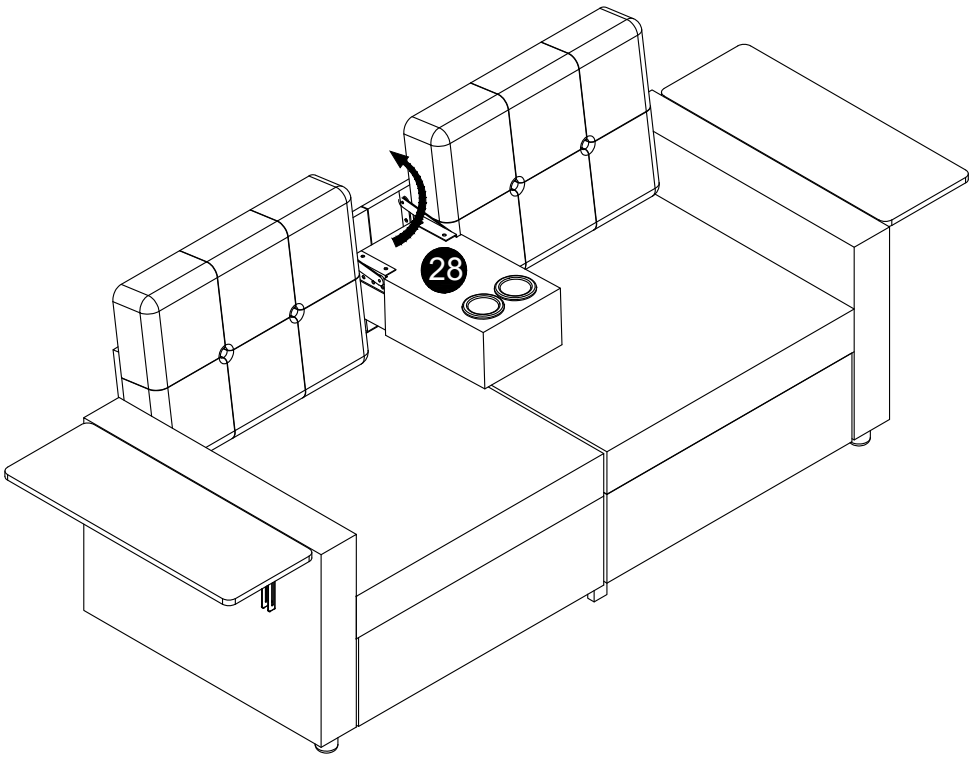

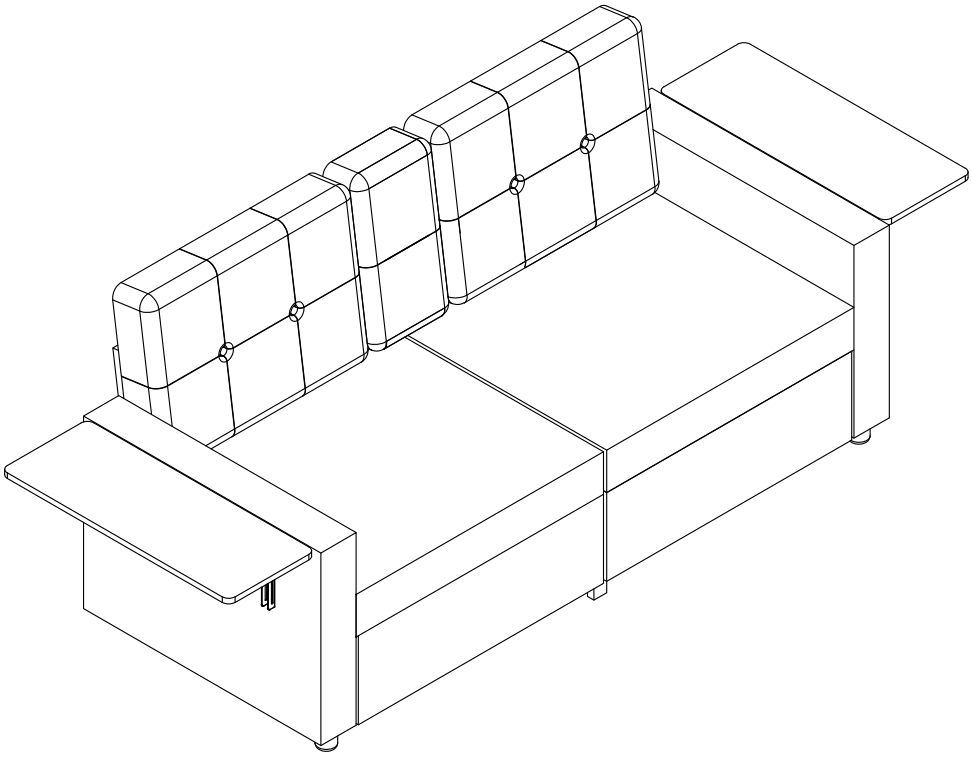

SAFETY INFORMATION OR WARNING

EN **Please read carefully**

Warnings:
Do not use on uneven surfaces;
Avoid climbing or tilting the product;
Check for loose screws during use;
Keep away from fires, direct sunlight, and damp environments.

DE **Bitte sorgfältig lesen**

Verwenden Sie das Produkt nicht auf unebenen Oberflächen;
Vermeiden Sie das Klettern oder Kippen des Produkts;
Überprüfen Sie während der Nutzung die Schrauben auf lockeren Sitz;
Von Feuer, direktem Sonnenlicht und feuchten Umgebungen fernhalten.

FR **Veuillez lire attentivement**

Ne pas utiliser sur des surfaces inégales;
Évitez de grimper ou d'incliner le produit;
Vérifiez les vis desserrées pendant l'utilisation;
Tenir à l'écart du feu, de la lumière directe du soleil et des environnements humides.

IT **Leggere con attenzione**

Non utilizzare su superfici irregolari;
Evitare di arrampicarsi o inclinare il prodotto;
Controllare durante l'uso se le viti sono allentate;
Tenere lontano da fiamme libere, luce solare diretta e ambienti umidi.

ES **Por favor, lea atentamente**

No usar en superficies irregulares;
Evitar subirse o inclinar el producto;
Revisar si hay tornillos sueltos durante el uso;
Mantener alejado de llamas, exposición directa al sol y lugares húmedos.