Upholstered Storage Bed with LED Lights & Wingback

Assembly Instructions

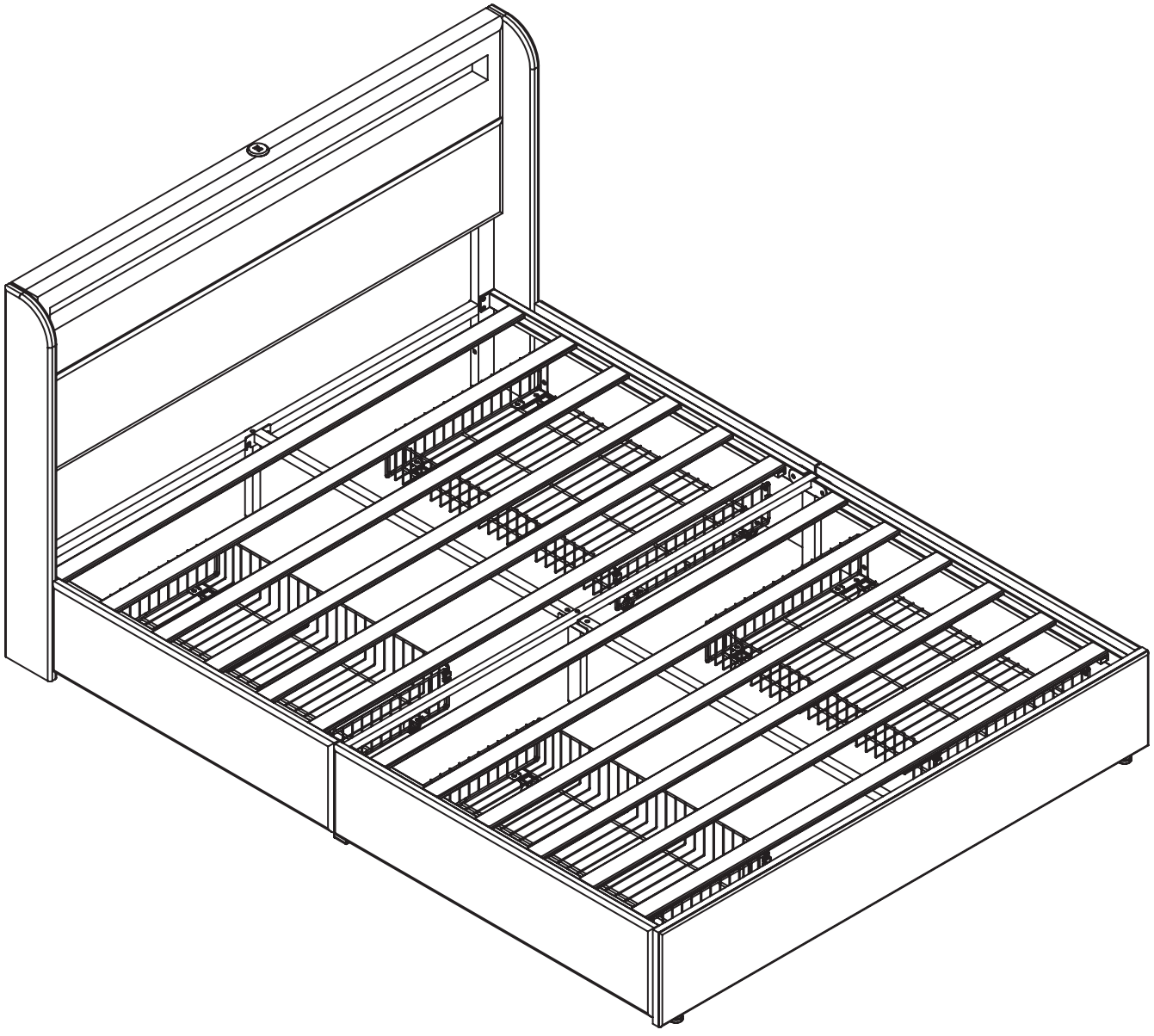

Dear Customers,

Thank you for purchasing our product. Please read this instruction manual carefully after receiving this product. It will help you assemble this product quickly, safely and correctly. You can keep this manual for future reference.

IMPORTANT

Please follow the instruction manuals and use a pad to protect the product during your assembly.

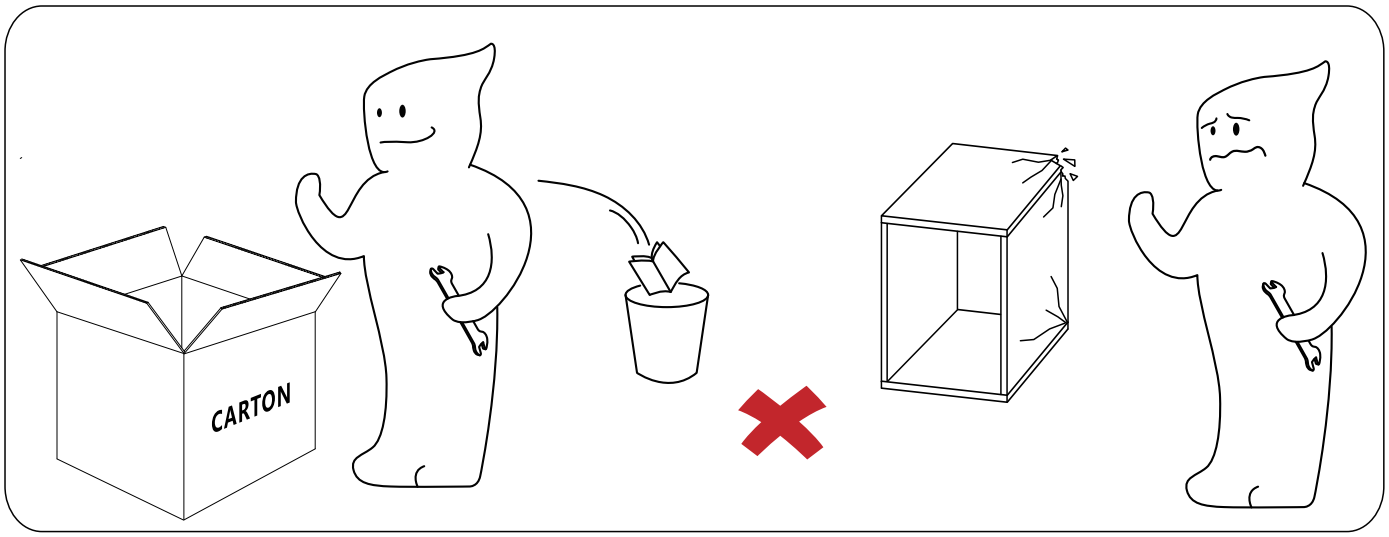

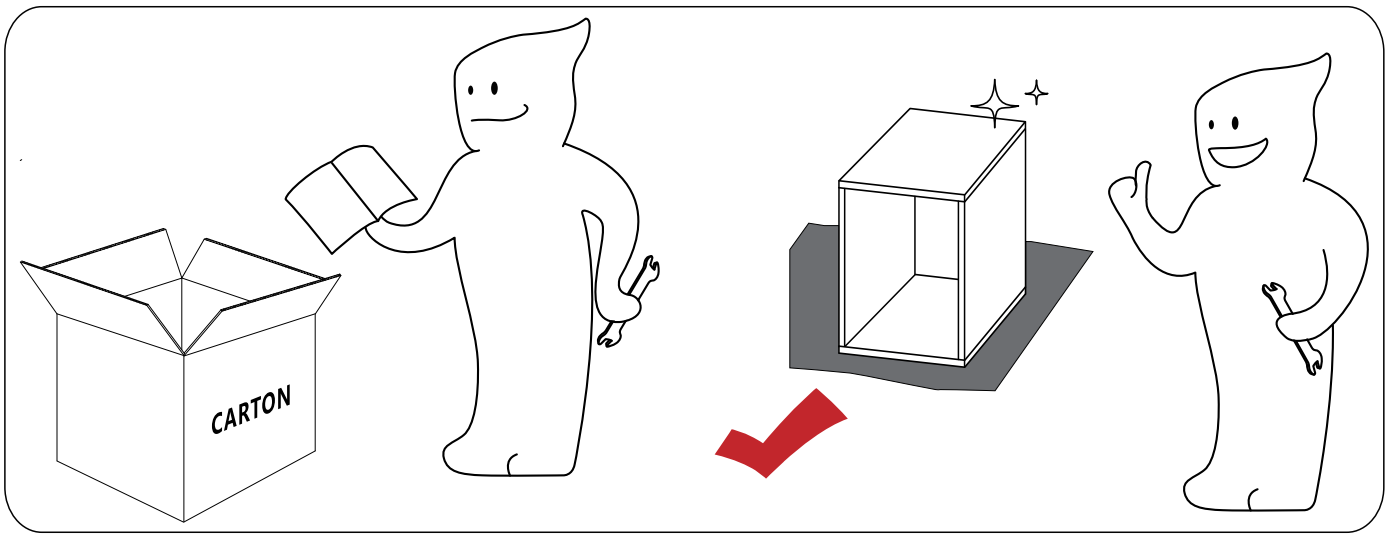

Note:
1. Should be assembled on flat ground to keep balance.
2. Before completing the installation, do not tighten the screws.



For easier and better assembly, **2** or more adults are required.

PARTS LIST

1 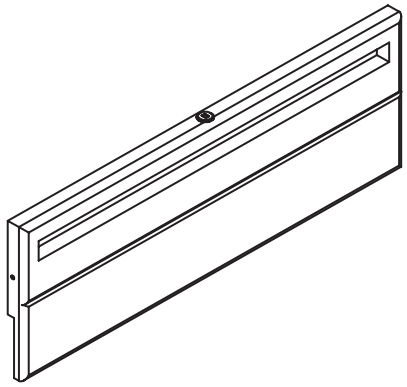 1PC	2 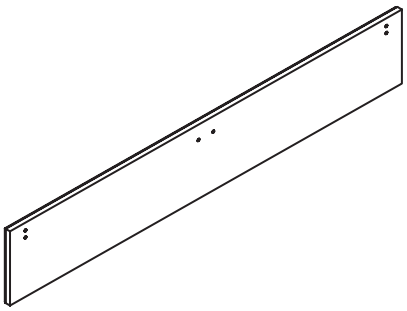 1PC	
3  1PC	4  1PC	5  1PC
6  1PC	7 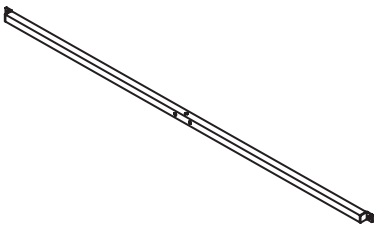 1PC	8  1PC
9  2PCS	10 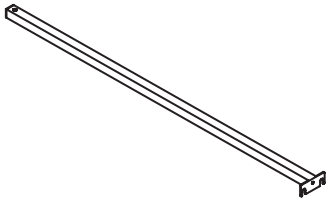 2PCS	11 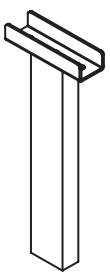 1PC

PARTS LIST

12 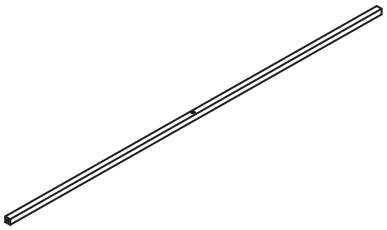 1PC	13 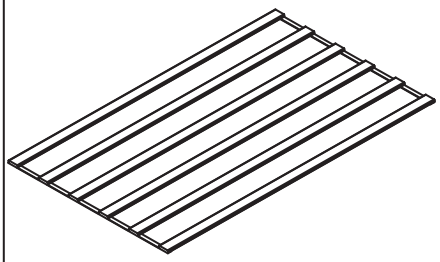 2PCS	14 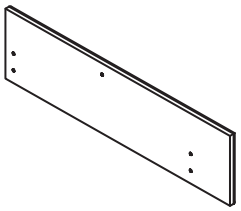 1PC
15 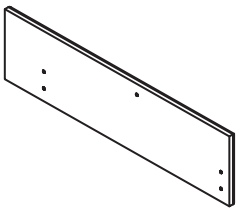 1PC	16 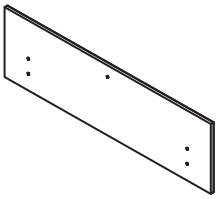 2PCS	17 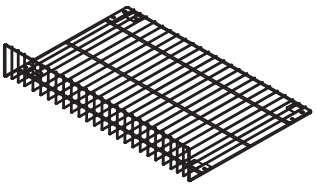 4PCS
18 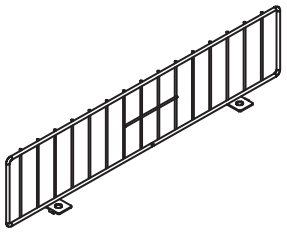 8PCS	19 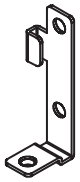 4PCS	20 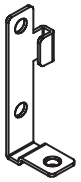 4PCS
21  16PCS	22 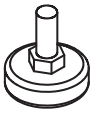 2PCS	A  M8x50 5PCS

B	C	D
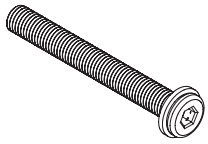 M8x65 4PCS	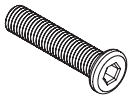 M8x35 3PCS	 M8x12 44PCS
E	**F**	**G**
 16PCS	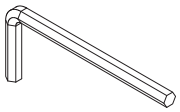 M8 1PC	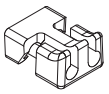 8PCS

1

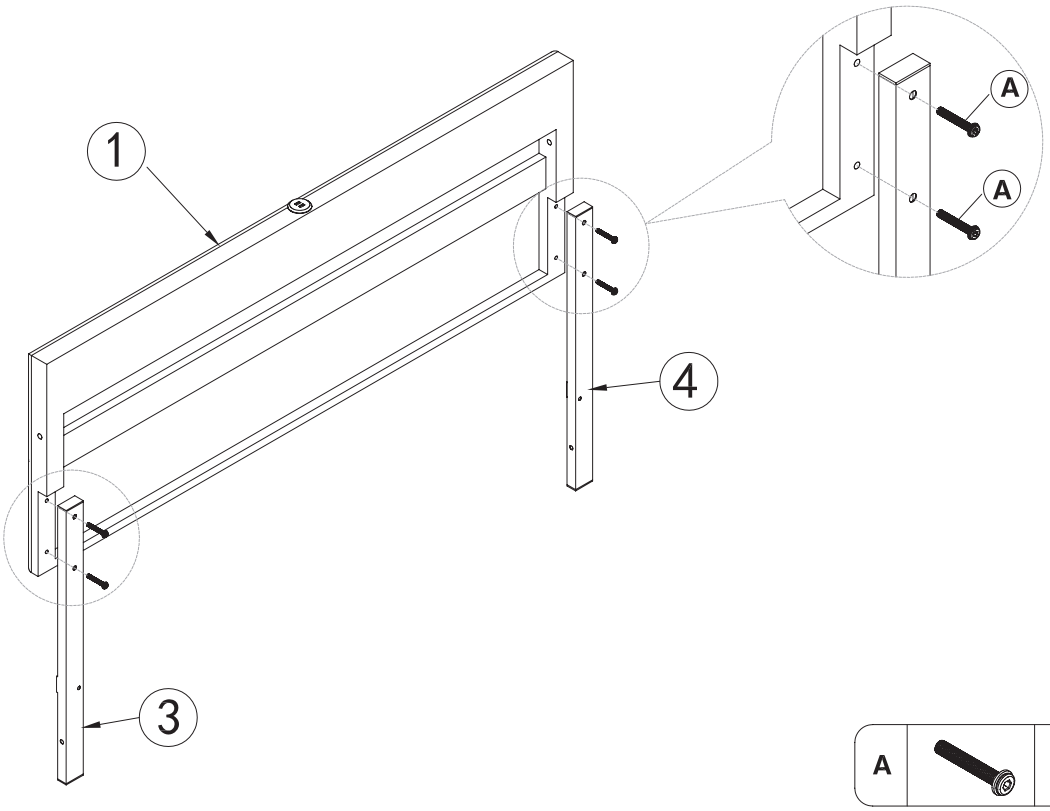

A		4PCS

2

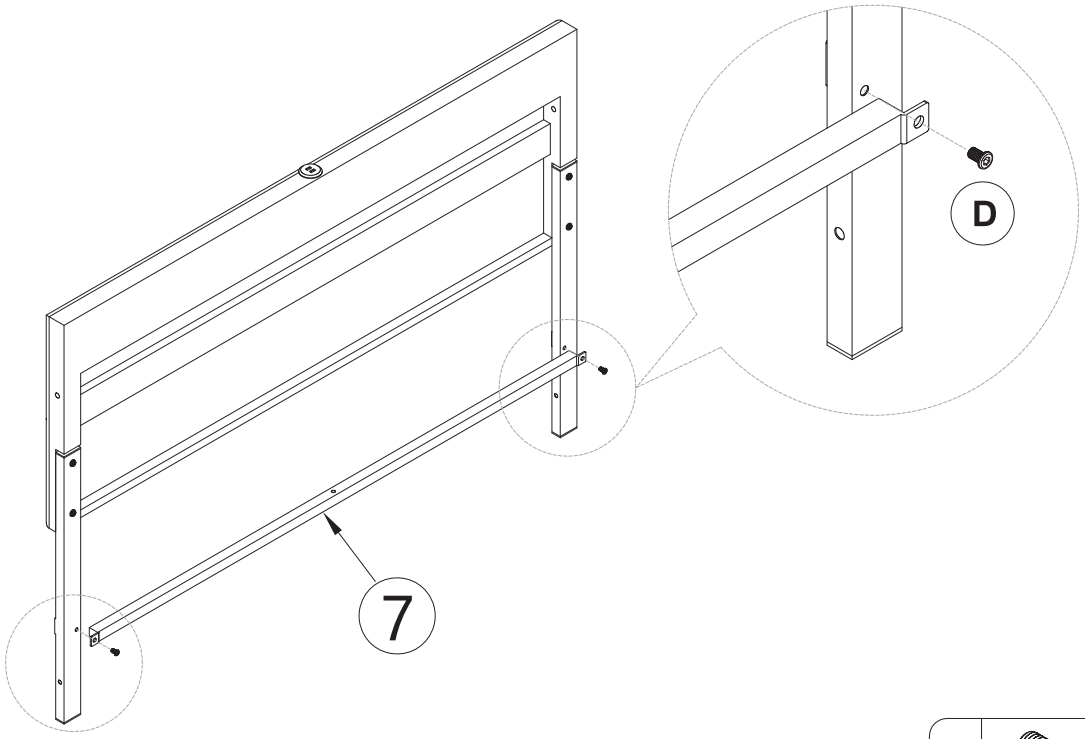

D		2PCS

3

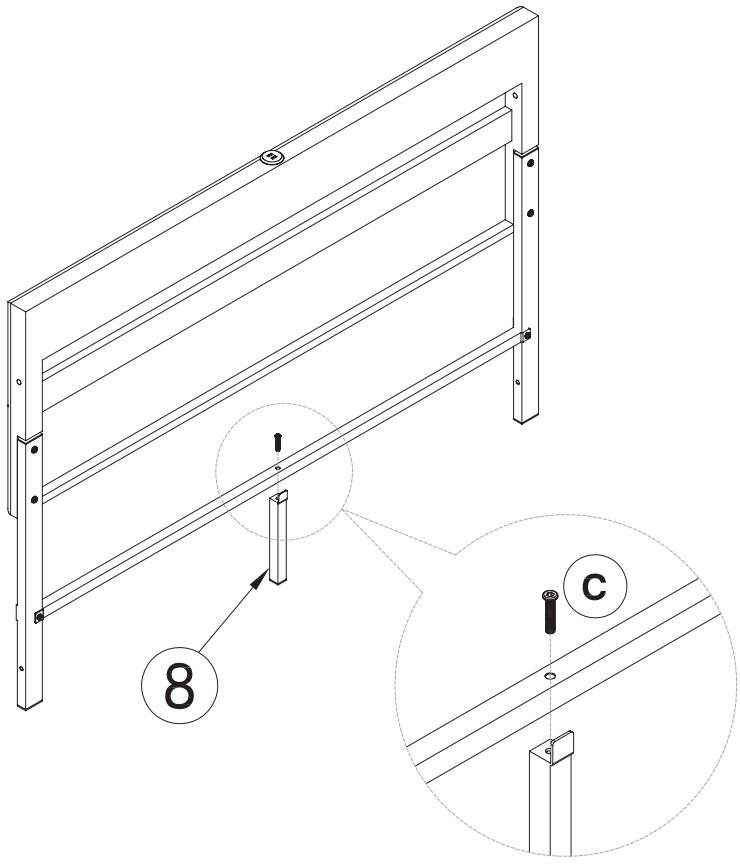

C		1PC

4

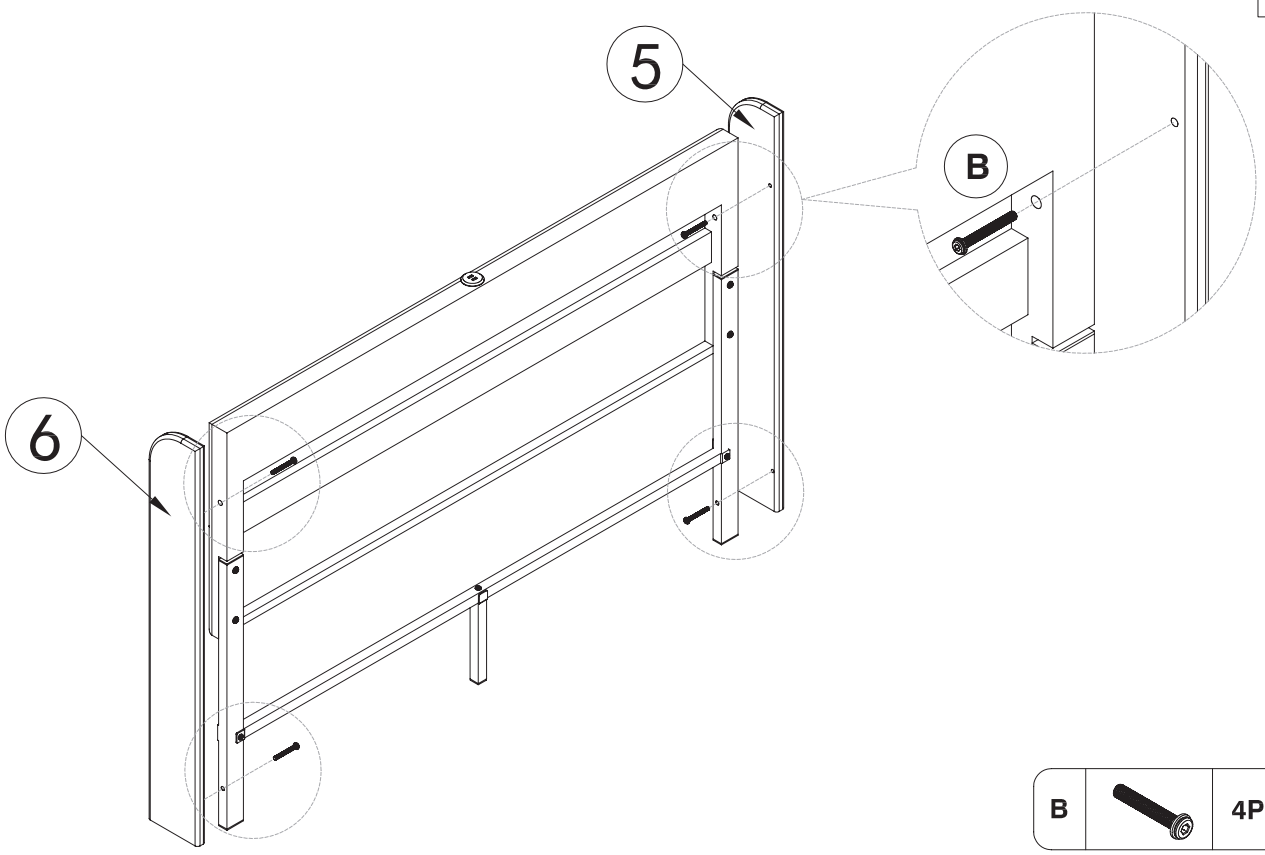

B		4PCS

5

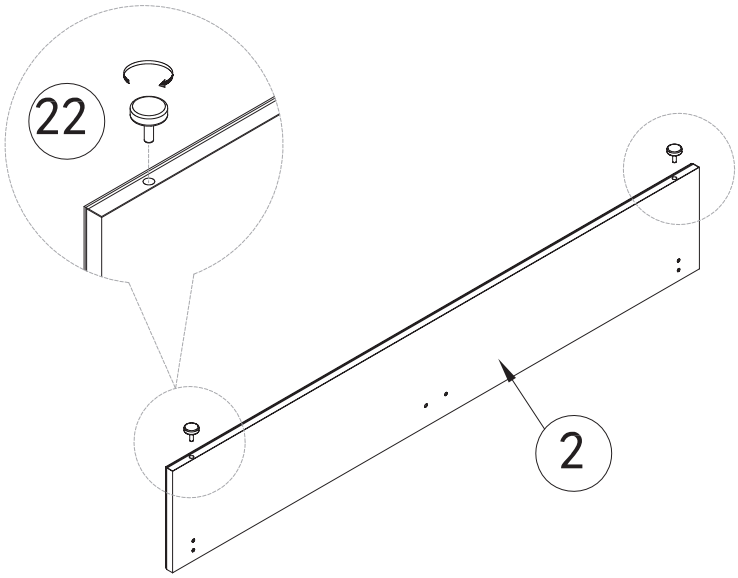

22		2PCS

6

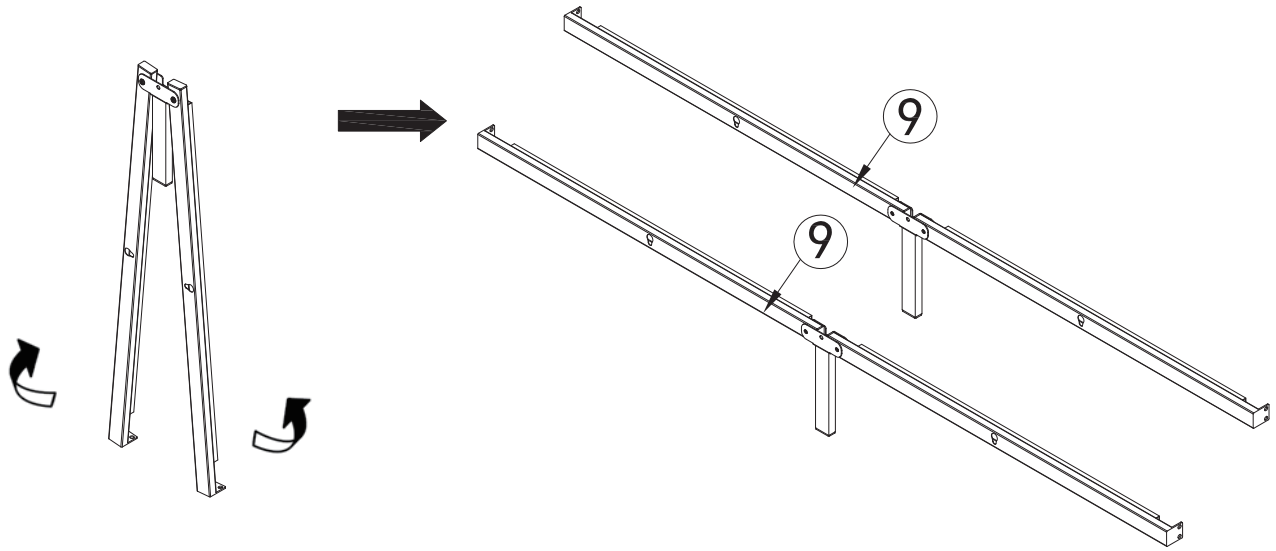

Open part ⑨

2PCS

7

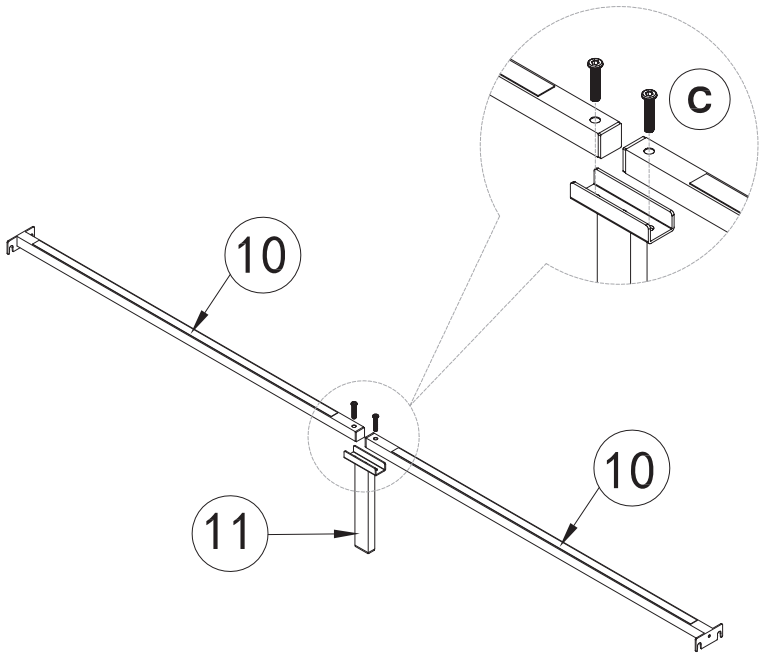

C	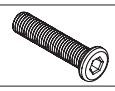	2PCS

8

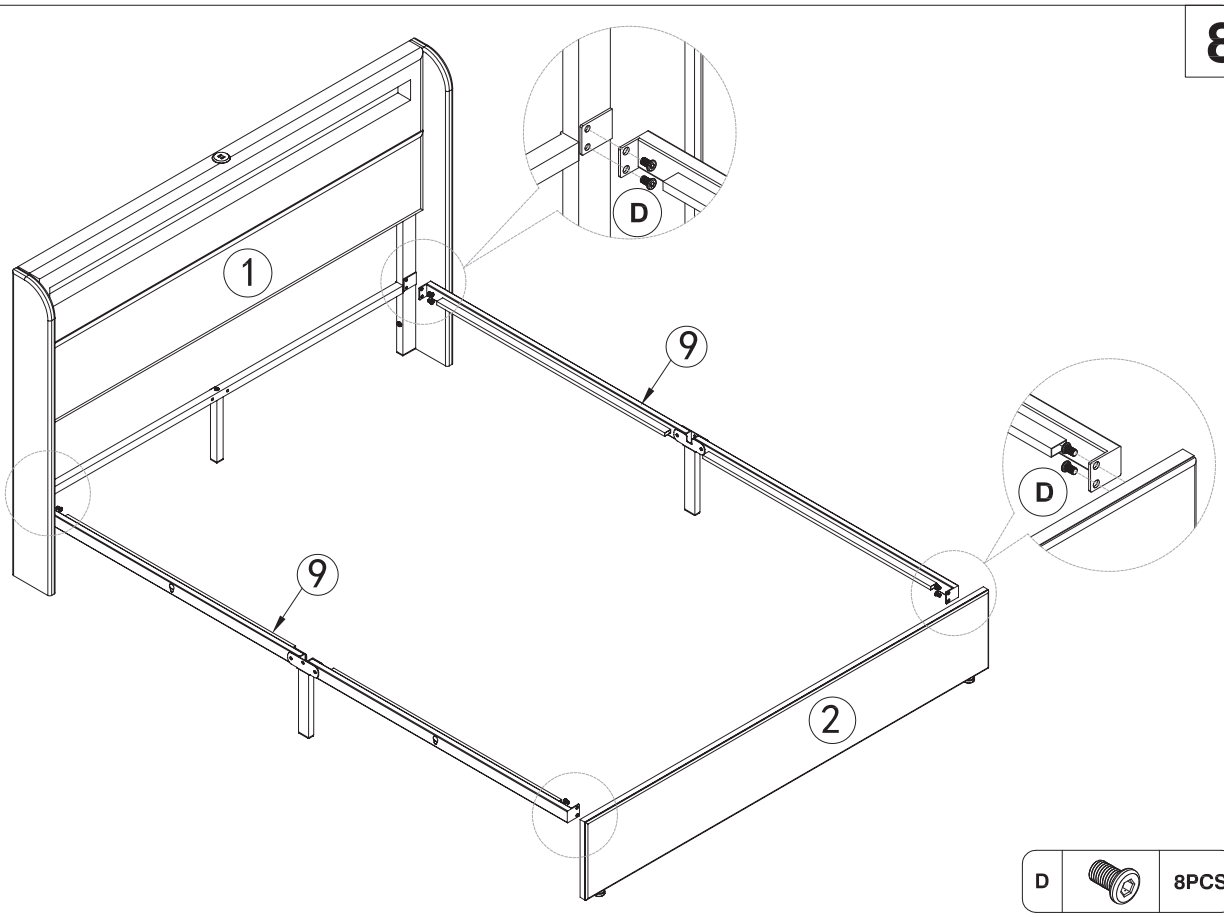

D		8PCS

9

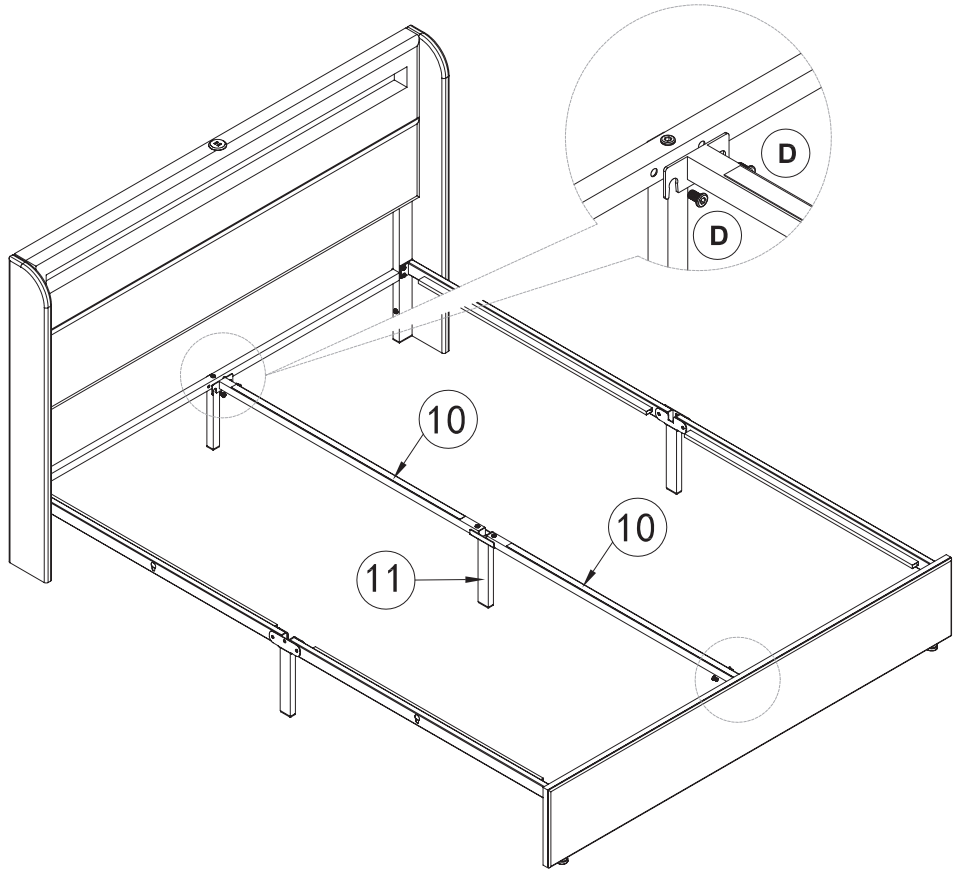

D		4PCS

10

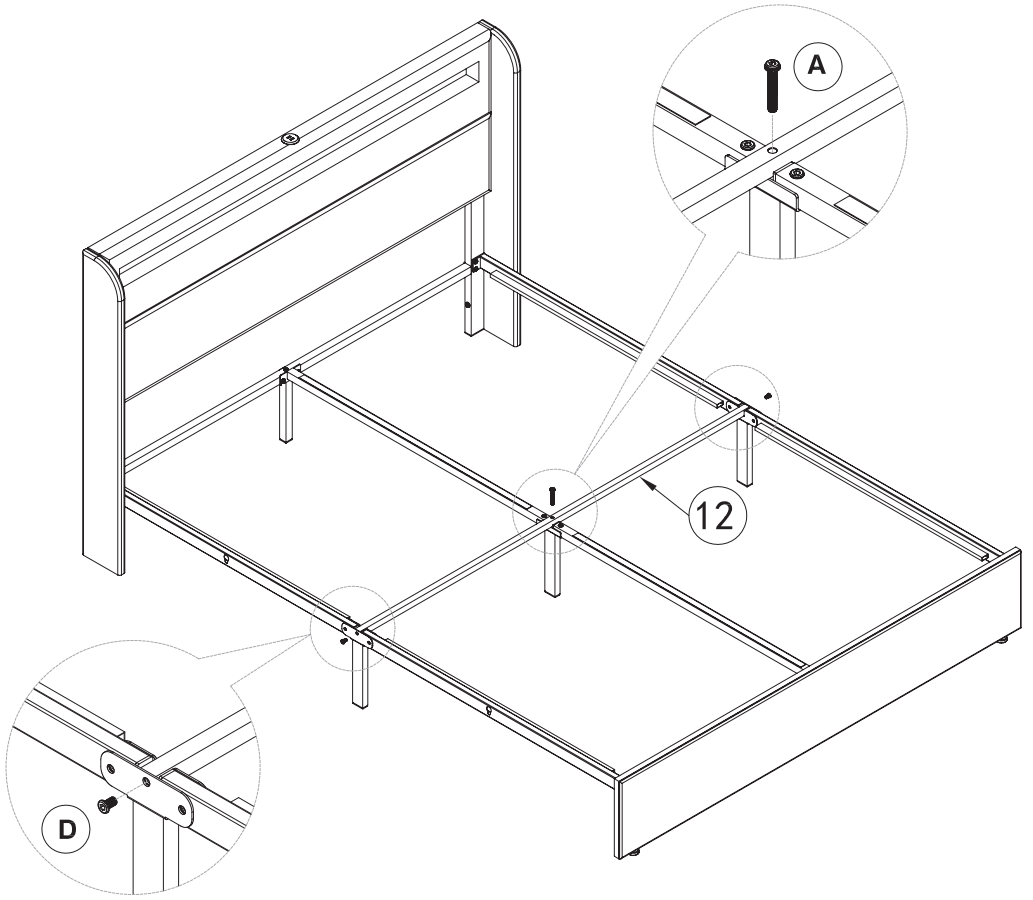

D		2PCS
A		1PC

11

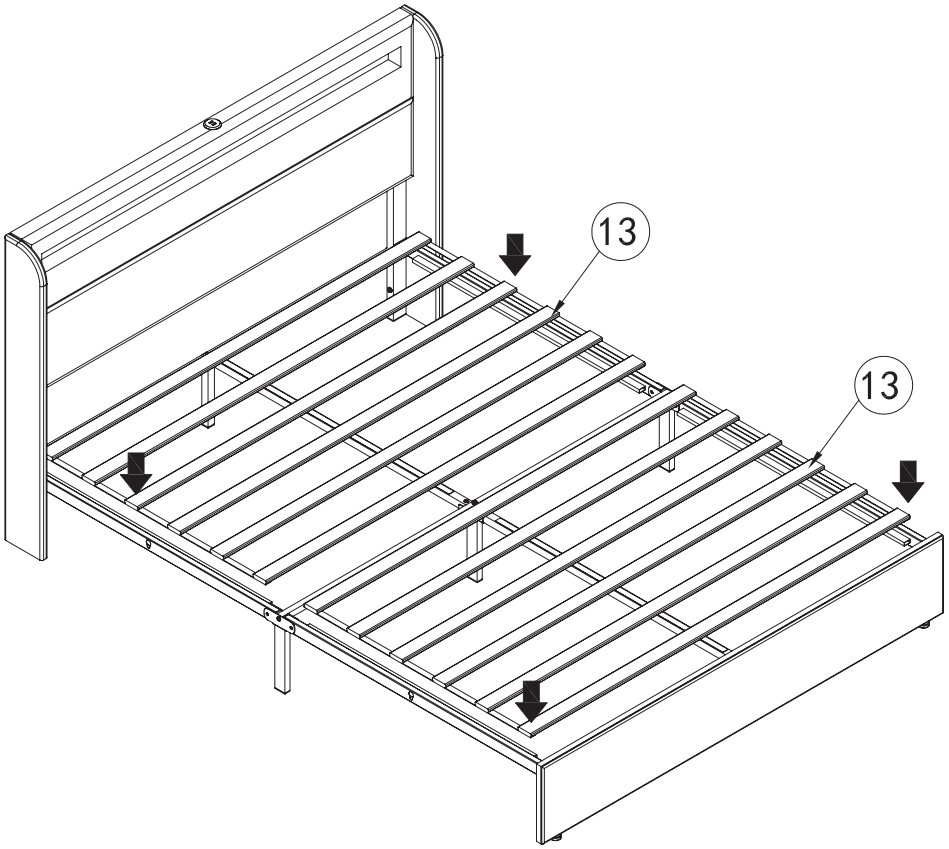

12

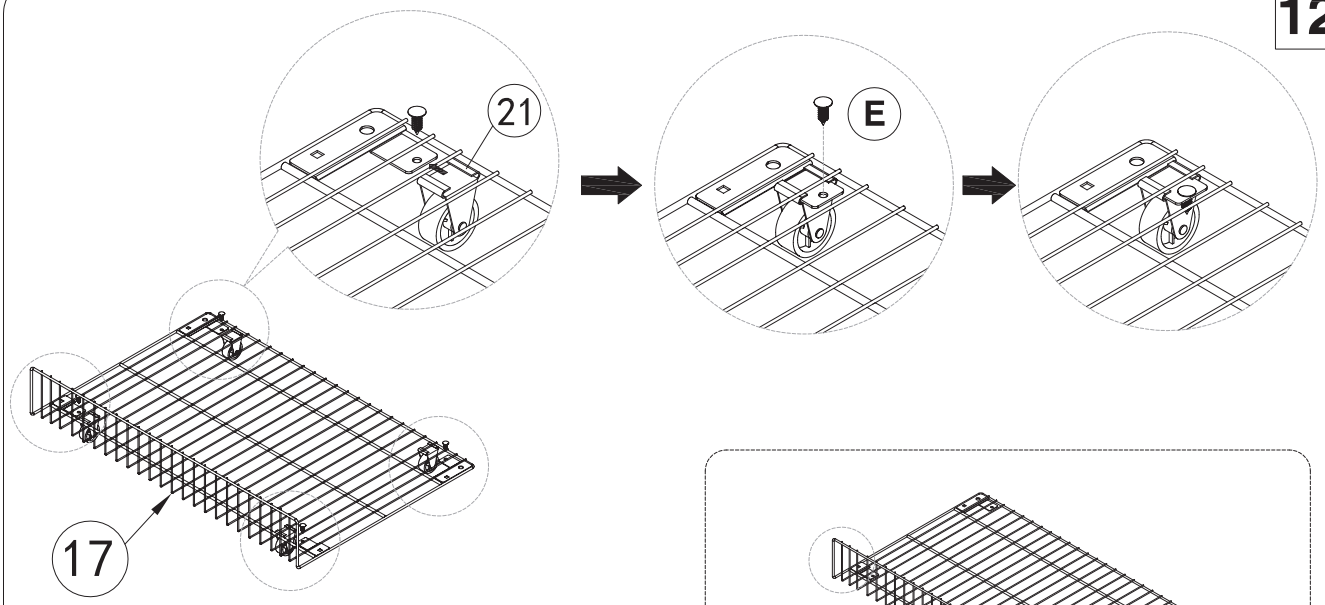

E		4PCS
21		4PCS

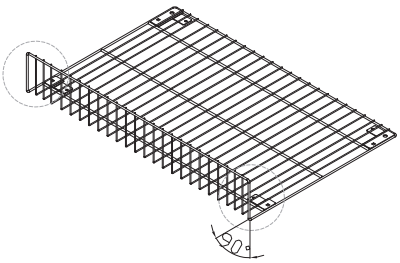

Transportation may lead to deformation, please just correct it by hand.

13

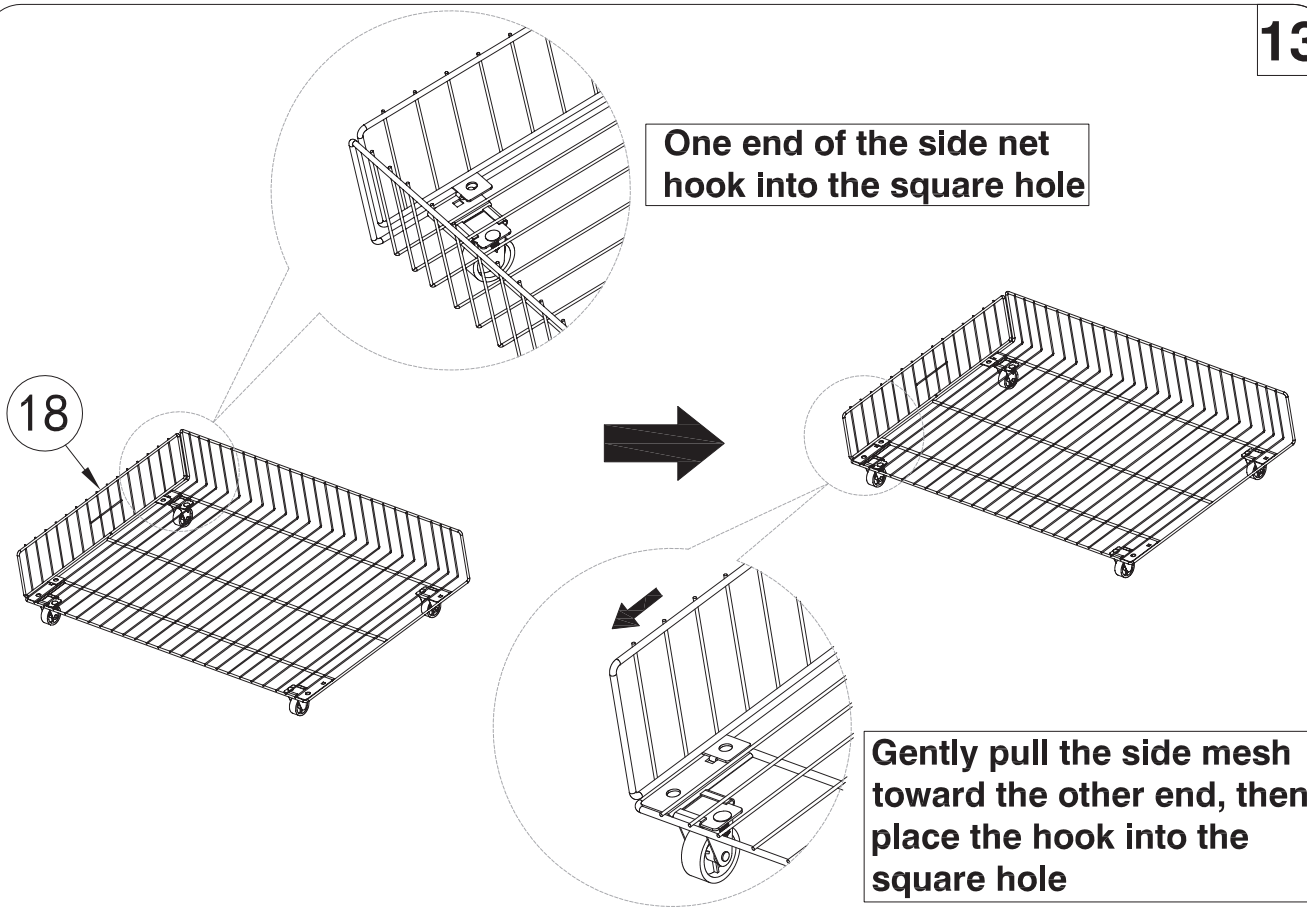

One end of the side net hook into the square hole

Gently pull the side mesh toward the other end, then place the hook into the square hole

14

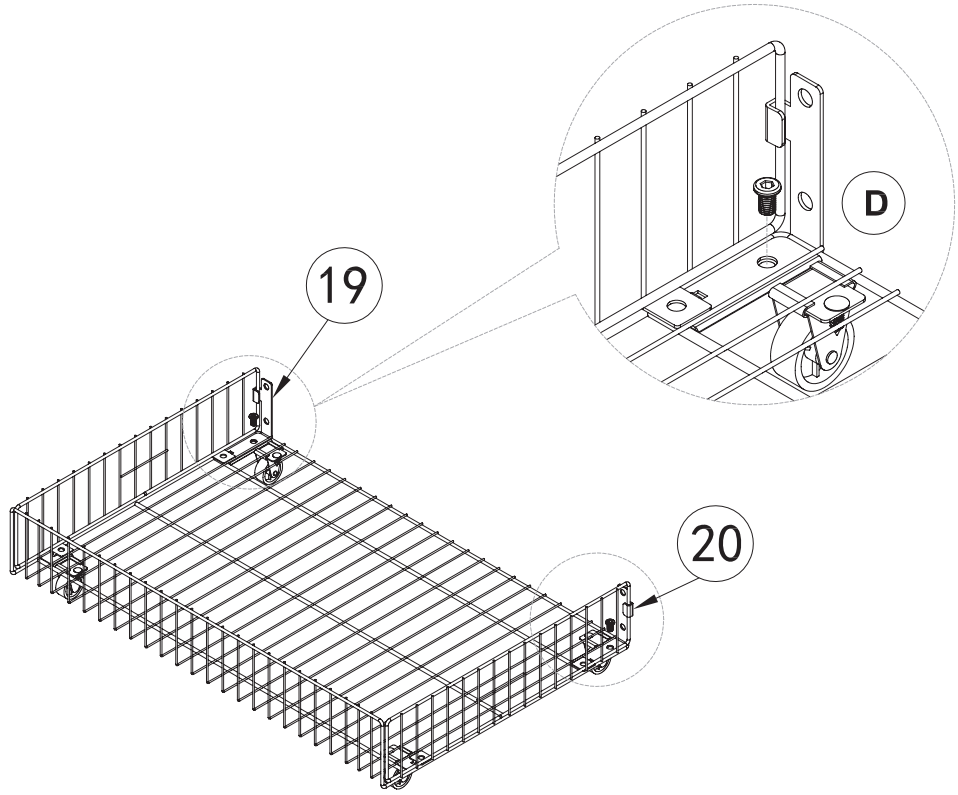

D		2PCS

15

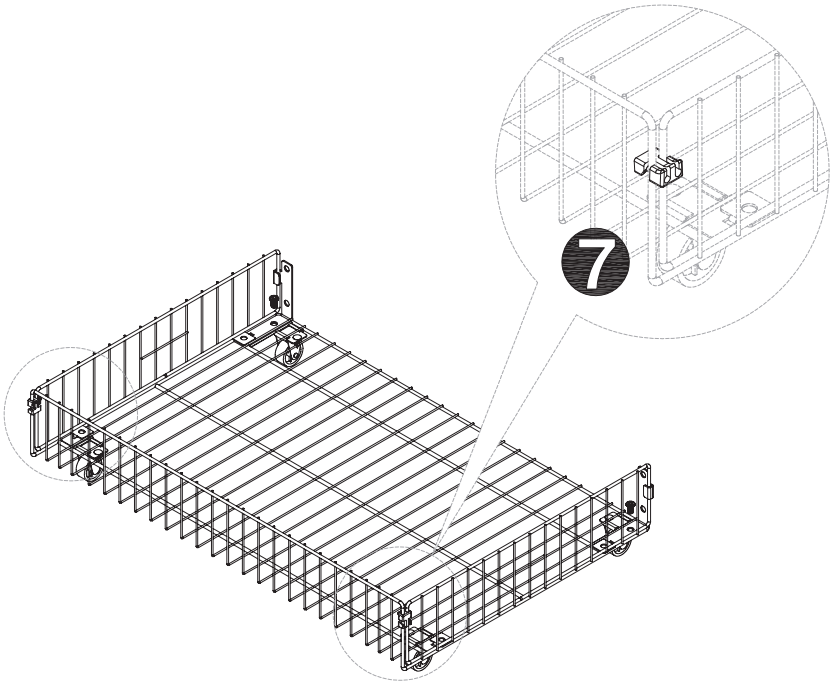

The plastic buckle is placed between the two wires as shown

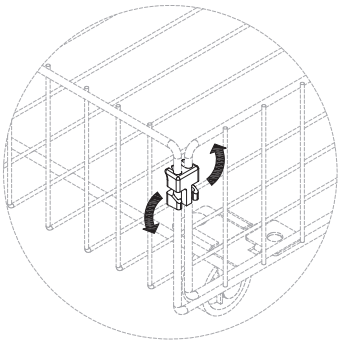

The plastic buckle rotates into the wires

G		2PCS

16

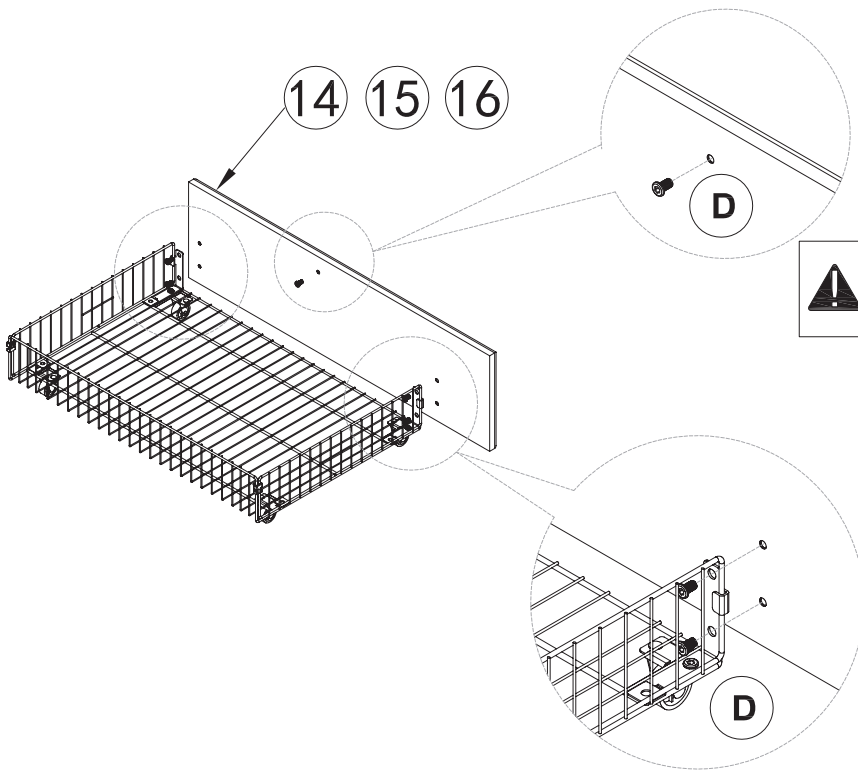

Don't lock the screws, leave a gap

D		5PCS

17

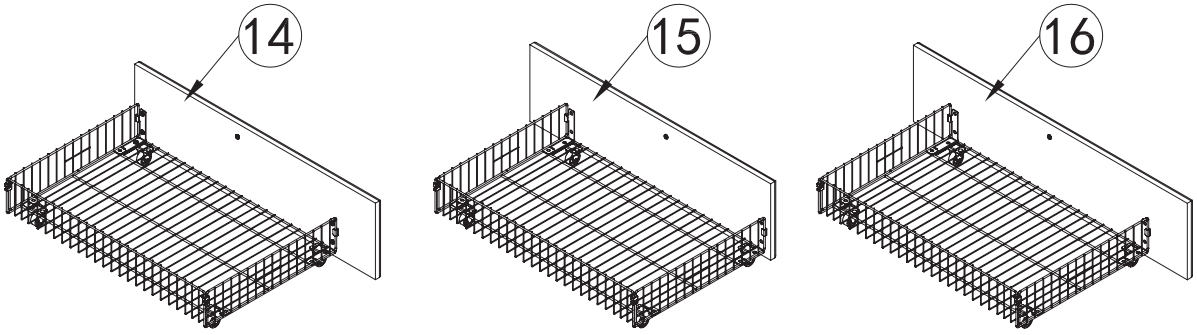

1PC **1PC** **2PCS**

Assemble the other three drawers in the way above. 4 drawers in total.

18

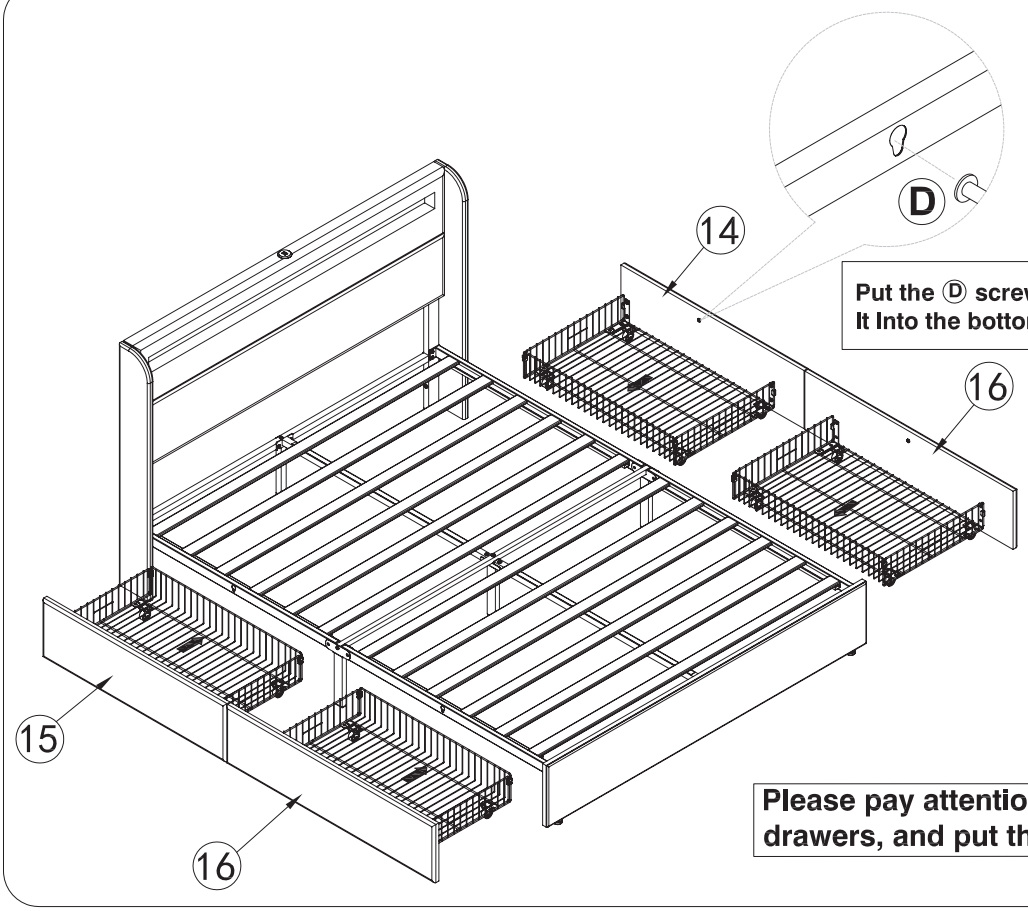

Put the Ⓓ screws intothe whole and perss It Into the bottom of the " " whole

Please pay attention to the position of 4 drawers, and put them as shown above

19

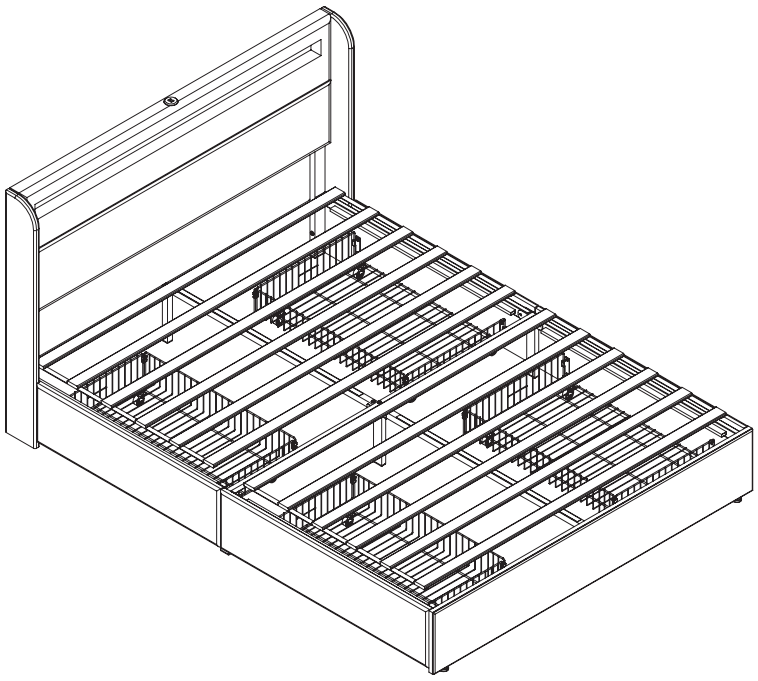

20

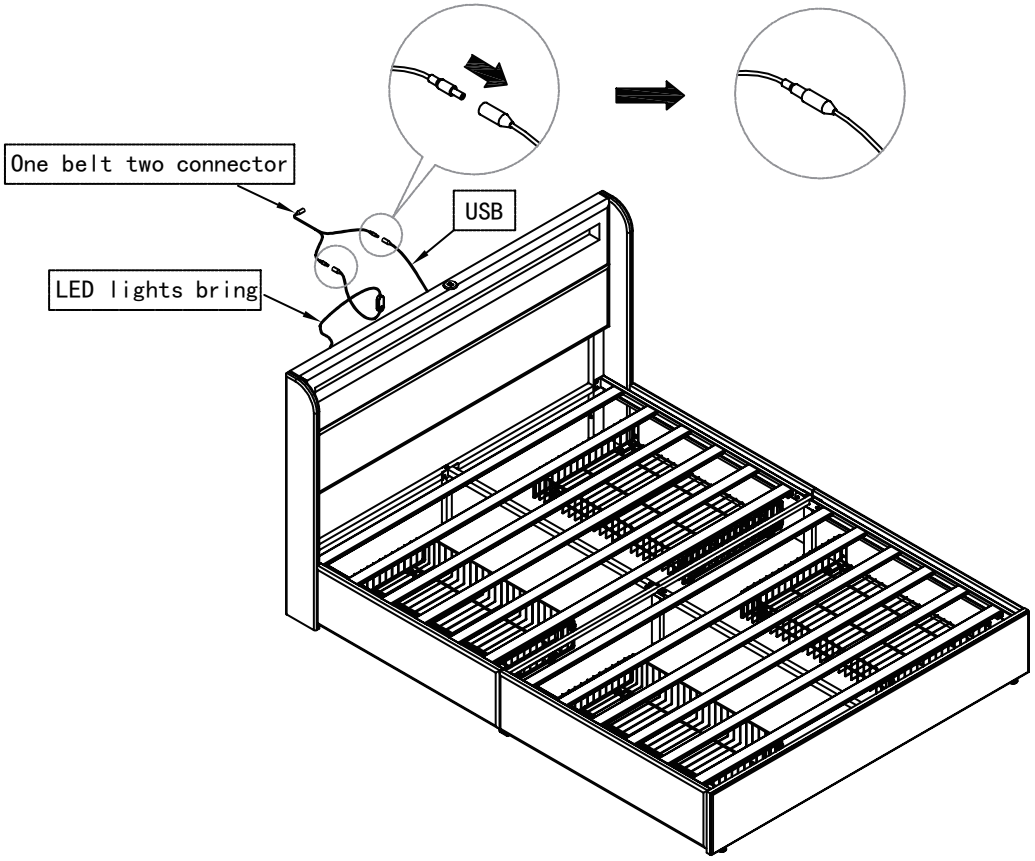

21

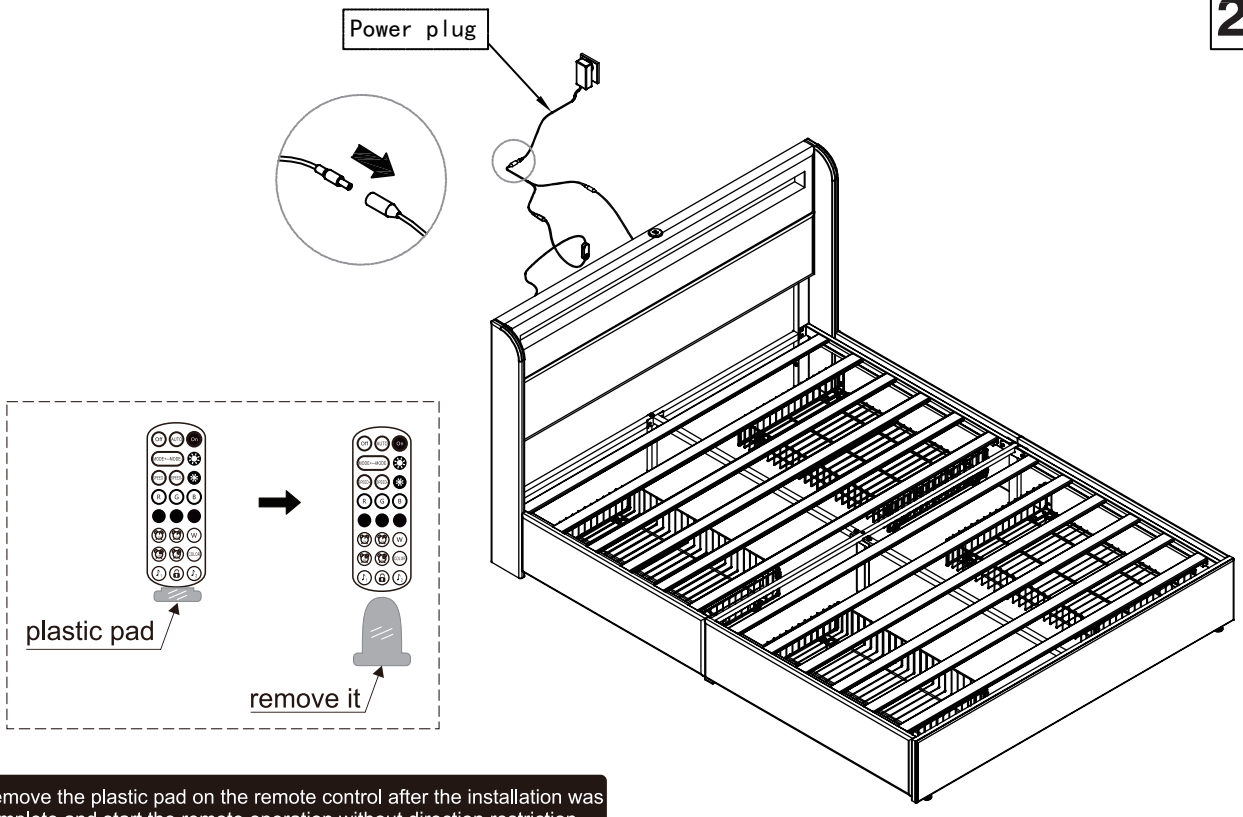

Remove the plastic pad on the remote control after the installation was complete and start the remote operation without direction restriction.

Thank you for purchasing our product