ITEM NO.	P/N	DESCRIPTION	QTY.
1	BPDT	BASE	2
2	NKSL-58	Support	2
3	NKSL-1.25	Neck	2
4	HB1T-1	HUB	2
5	NKSL-78	Connector	4
6	BL1DT1T-34	End Ball	2
7	TU12	TUBE	1

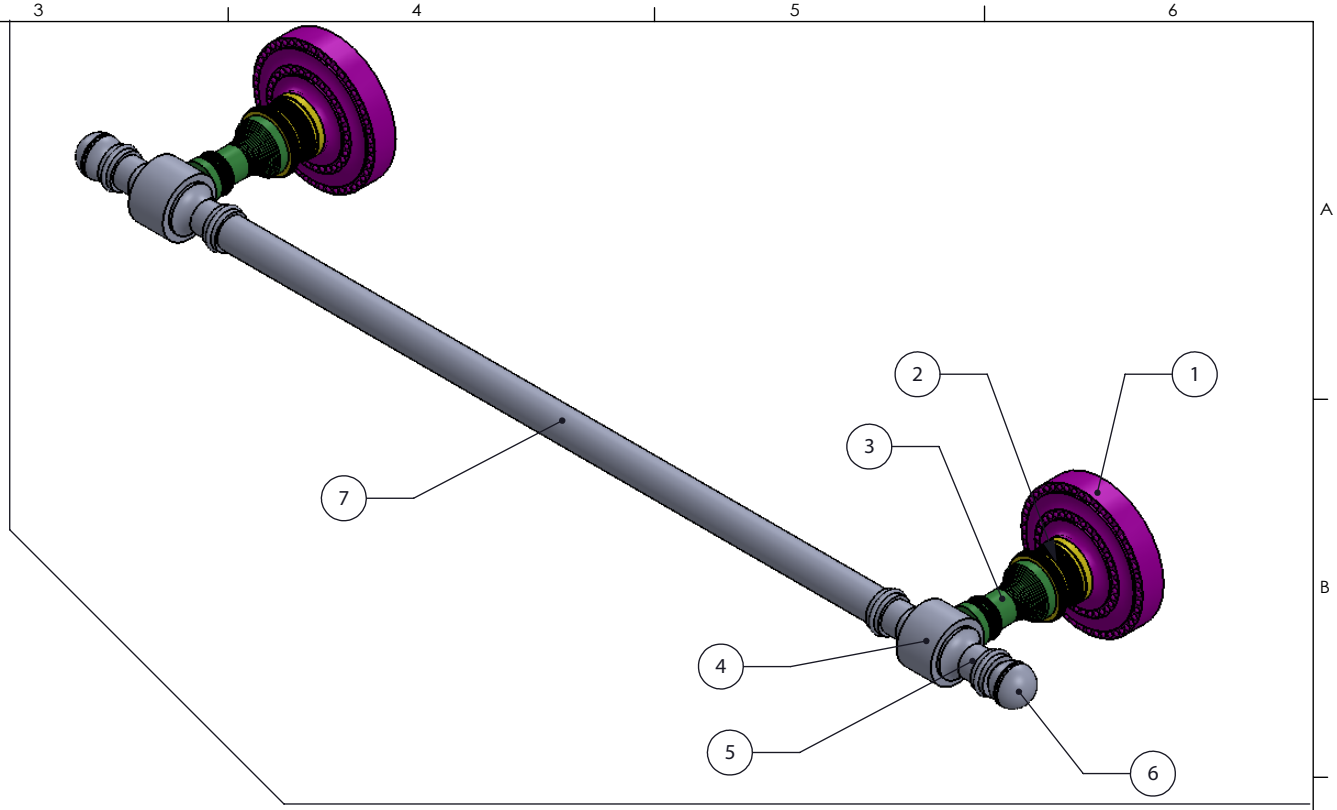

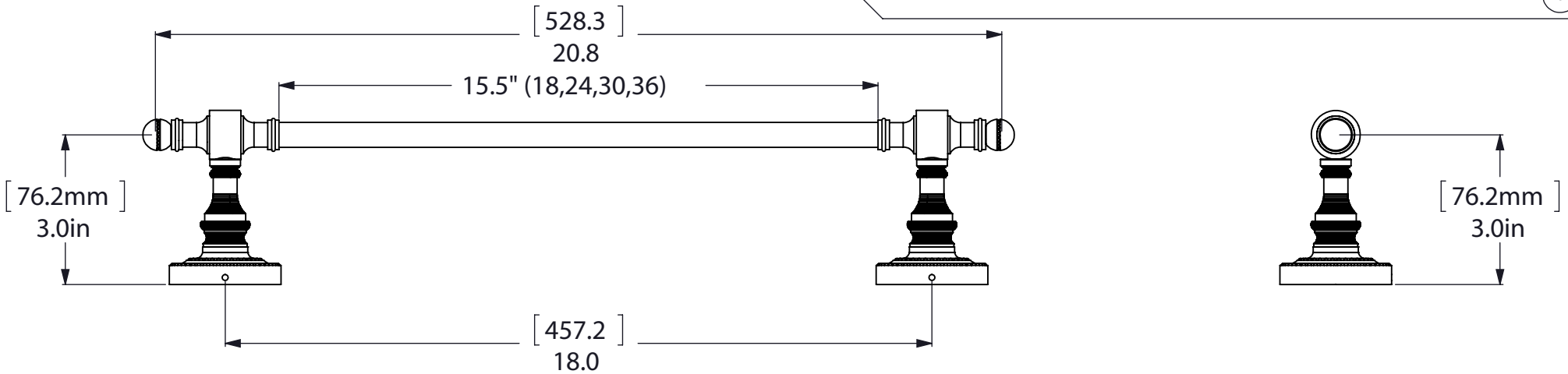

CONFIDENTIALITY/LIMITED LIABILITY STATEMENT
This document (and any files attached to it) is confidential and intended only for the person or entity to which it is delivered. If you are not the intended recipient, then you have received this document by mistake and any use, dissemination, forwarding, printing or copying of this document and its file attachments is prohibited. Please notify ALLIED BRASS INC. immediately either by telephone or by email, delete the misdirected document from your system and destroy any copies you have made of it. We do not accept any liability for any loss or damage which may arise from your receipt of this document.

UNLESS OTHERWISE STATED													
DO NOT SCALE DRAWING	X.XXX	+/-0.025		INITIALS	DATE	ITEM	QTY	DRG/PART NO	CLIENT:				
CHAMFER ALL EDGES 0.5X45°	X.XX	+/-0.1	DESIGNED		IJM	MATERIAL		BRASS		WEIGHT		FINISH	TBD
	X.X	+/-0.25	DRAWN		IJM	HEAT TREAT		NA				QUANTITY	
DRAWING ISO	X	+/-0.75	CHECKED		R. ANDRIS	CUSTOMER				CUSTOMER No		---	
	ANGLES		PROJ.ENG			DESCRIPTION:						DRAWING No.	REV
	X.XX	+/-0.05°	SAFETY									RD-31	0
	X.X	+/-0.1°	APPROVED		R. ANDRIS	RD-31							
	X	+/-0.5°	FILENAME	RD-31								SCALE 1:2.5	SHEET: 01 A4
FIRST ANGLE PROJECTION	MACHINED FINISH	3.2											