ASSEMBLY INSTRUCTIONS

Thank you for purchasing this quality Product. Be sure to check all packing material carefully for small parts, which may have come loose inside carton during shipment. idenlify and count all parts and compare with the parts list below.

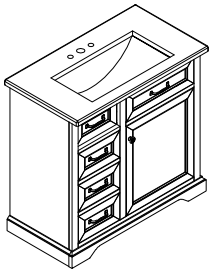

ASSEMBLY INSTRUCTION:

1. Remove hadware from box and sort by size.
2. Please check to see that all hardware and parts are present prior start of assembly.
3. Please follow attached instruction in the sme sequence as numbered asure fast and aesy assemblly.

WARNING!

1. Dont attempt to repair or modify parts that are proken or defective. Prease contact the store immediately.
2. This productis for home use only and not intended for commercial esatablishments.
3. Two persons are required for assembly.
4. Approximate assembly time 1/2 hours.
5. Component parts and fittings contained in the box. Prease sort out all parts before you begin to assemble the item. This is to make sure you always use the correct part.
6. It is STRONGLY RECOMMENDED that you ANCHOR this product.toling furniture can cause serious injuries and death. To prevent your furniture from tipping forward it is strongly recommended that you securely attach this product to a wallr other solid surface, using the anchor straps provided appropriate fixings.

No.	Component		Q'ty
A	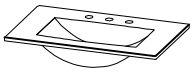	Sink	1
B	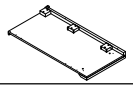	Side Panel-Right	1
C	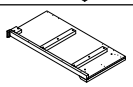	Side Panel-Left	1
D	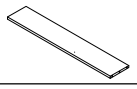	Back Panel - Up	1
E	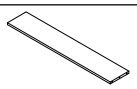	Back Panel - Low	1
F		Door	1
G		Middle Panel	1
H	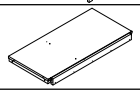	Bottom	1
I	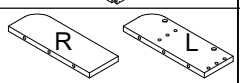	Racket Panel	2
K		Mid Racket Panel	2
L		Round horizontal Bar	2
M		Front Flip down Box - Right	1
M1		Back Flip down Box - Right	1
M2		Bottom Flip down Box - Right	1
N	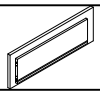	Front Flip down Box - Left	1
N1	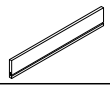	Back Flip down Box - Left	1

No.	Component		Q'ty
N2	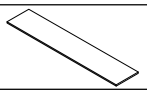	Bottom Flip down Box - Left	1
O		Sides Flip down Box	4
P		Front Drawer Panel - Top	1
P1	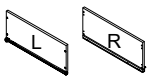	Sides Drawer Panel - Top	2
P2		Back Drawer Panel - Top	1
Q		Front Drawer Panel - Bottom	1
Q1	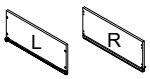	Sides Drawer Panel - Bottom	2
Q2		Back Drawer Panel - Bottom	1
R	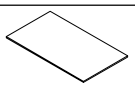	Bottom Drawer Panel	2
S	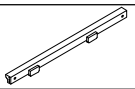	Front Rail - Above	1
T		Front Rail #1 - Middle	1
U		Front Rail #2 - Middle	2
V	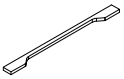	Front Rail - Below	1
W	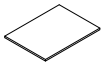	Shelf	1

ASSEMBLY INSTRUCTIONS

Thank you for purchasing this quality Product. Be sure to check all packing material carefully for small parts, which may have come loose inside carton during shipment. idenlify and count all parts and compare with the parts list below.

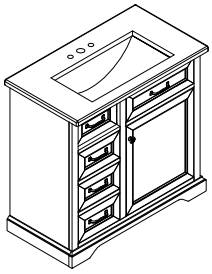

ASSEMBLY INSTRUCTION:

1. Remove hadware from box and sort by size.
2. Please check to see that all hardware and parts are present prior start of assembly.
3. Please follow attached instruction in the sme sequence as numbered asure fast and aesy assemblly.

WARNING!

1. Dont attempt to repair or modify parts that are proken or defective. Prease contact the store immediately.
2. This productis for home use only and not intended for commercial esatablishments.
3. Two persons are required for assembly.
4. Approximate assembly time 1/2 hours.
5. Component parts and fittings contained in the box. Prease sort out all parts before you begin to assemble the item. This is to make sure you always use the correct part.
6. It is STRONGLY RECOMMENDED that you ANCHOR this product.toling furniture can cause serious injuries and death. To prevent your furniture from tipping forward it is strongly recommended that you securely attach this product to a wallr other solid surface, using the anchor straps provided appropriate fixings.

No.	Hardware		Q'ty
1		Cam Lock	22
2		Cam Lock Screws	22
3		Wooden	35
4		Hinges	2
5		Screws M3.5x15	12
6	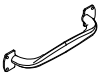	Handle	5
7		Knob	1
8		Screws M4x30	8
9		Screws M4x25	1
10		Screws M4x17	2
11		Rod Support hinges - Left	1
12		Rod Support hinges - Right	1
13		Swivel Hinges - Right	2

No.	Hardware		Q'ty
14		Swivel Hinges - Left	2
15		Shelf Support	4
16		Screws M3.5x12	4
17		Screws M3.5x12	16
18		Screws M4x20	32
19		Screws M4x30	9
20		Allen Bolts 1/4" x 40	4
21		Flat Washers 1/4" x 16 x 2	4
22		Lock washers 1/4" x 11 x 2	4
23		Allen key	1

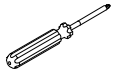 Not Included

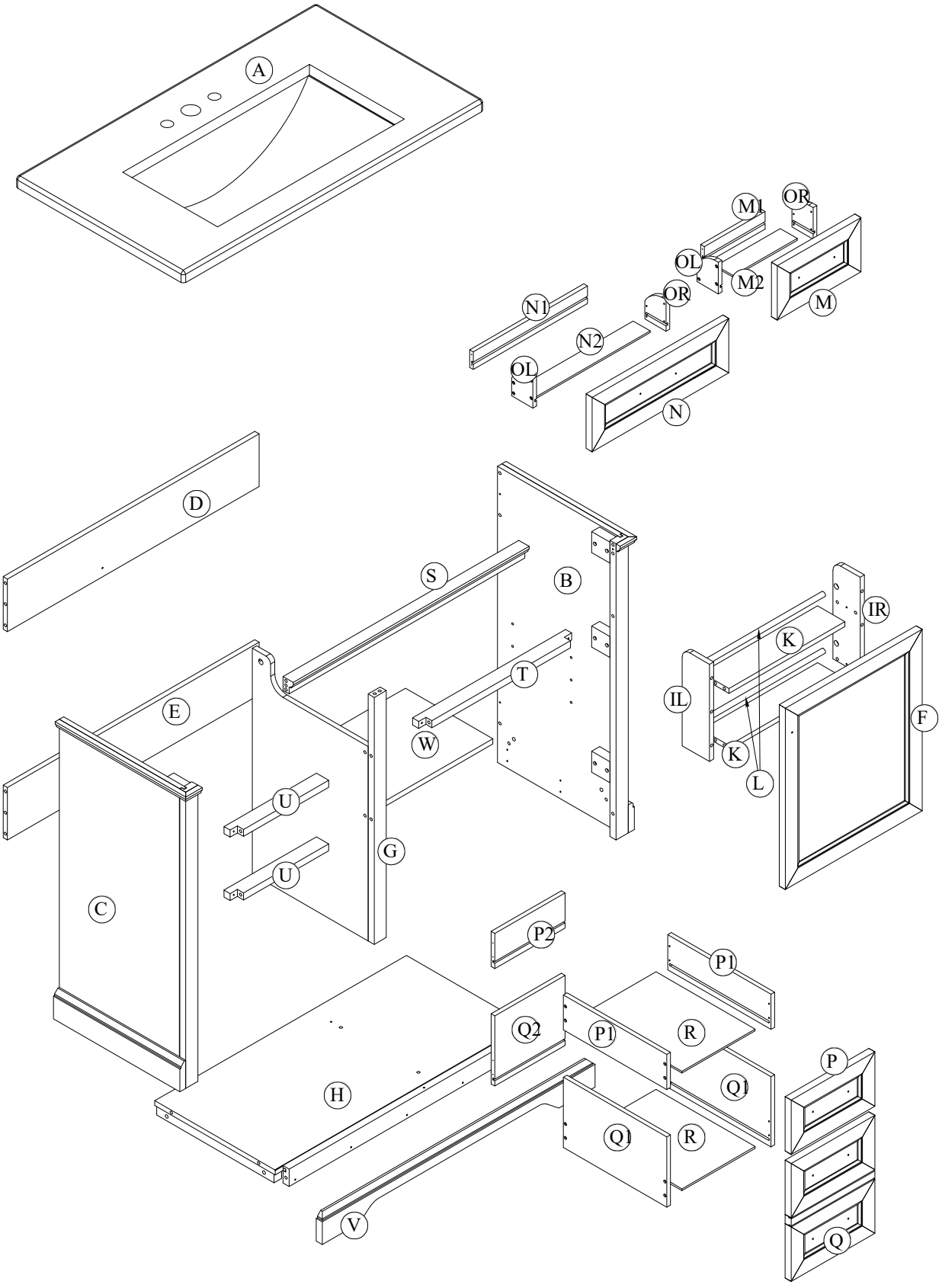
A
M1
OR
OL
M2
M
N1
OR
N2
OL
N
D
S
B
IR
K
T
IL
F
E
W
K
L
U
G
U
C
P2
P1
Q2
P1
R
P
Q1
H
Q1
R
V
Q

Step 1

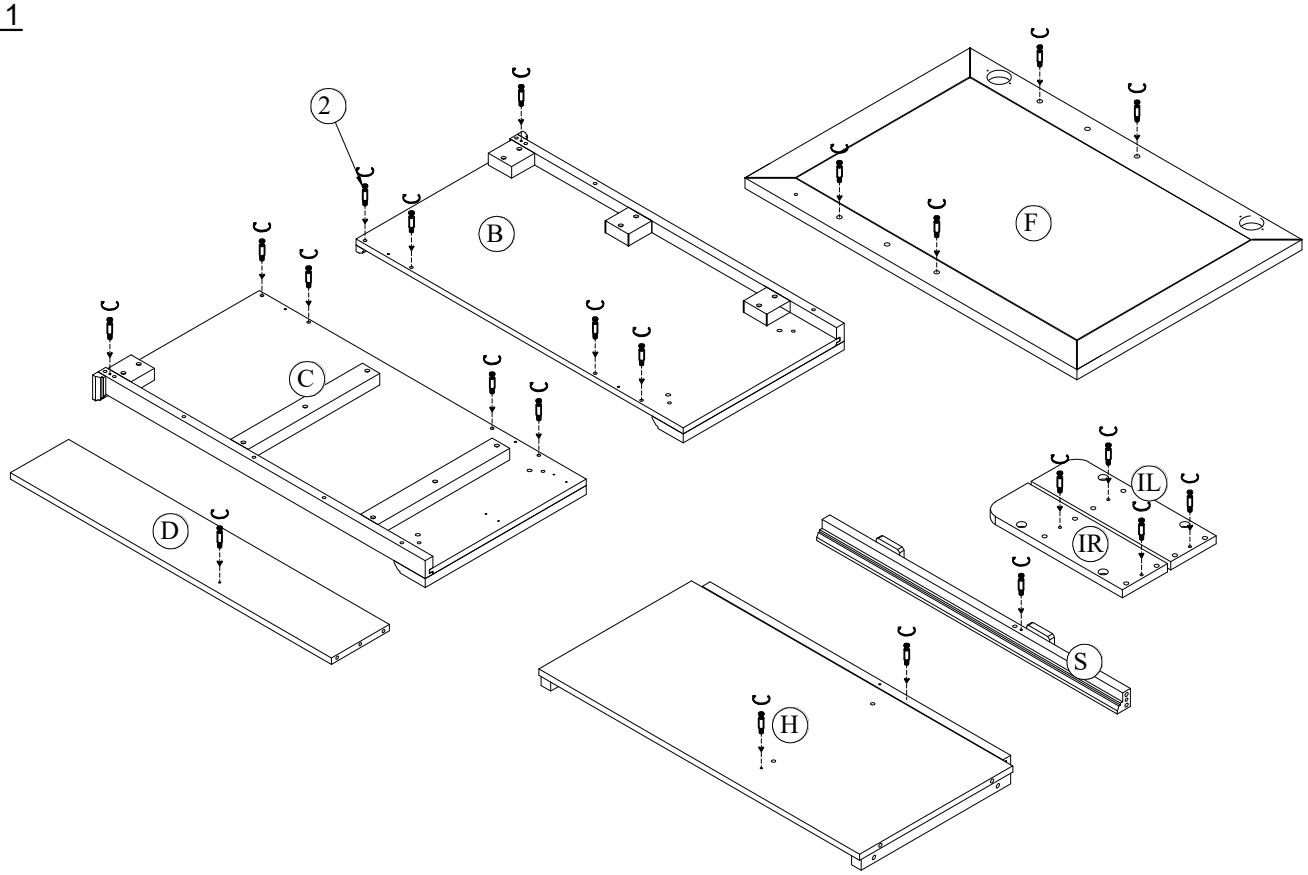

No	Hardware	Q'ty
2	Cam Lock Screws	22

Step 2

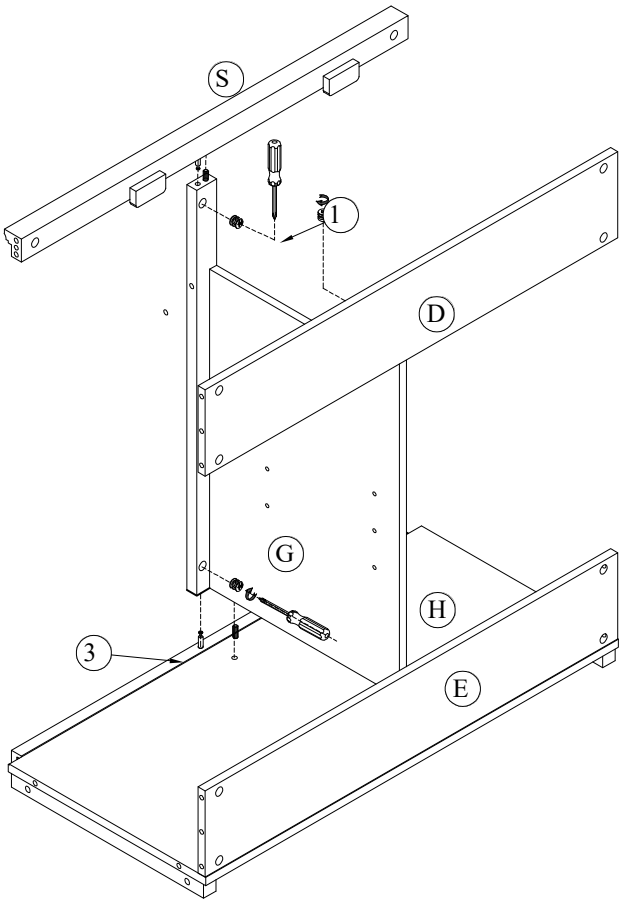

No	Hardware	Q'ty
1	Cam Lock	4
3	Wooden	3

Step 3

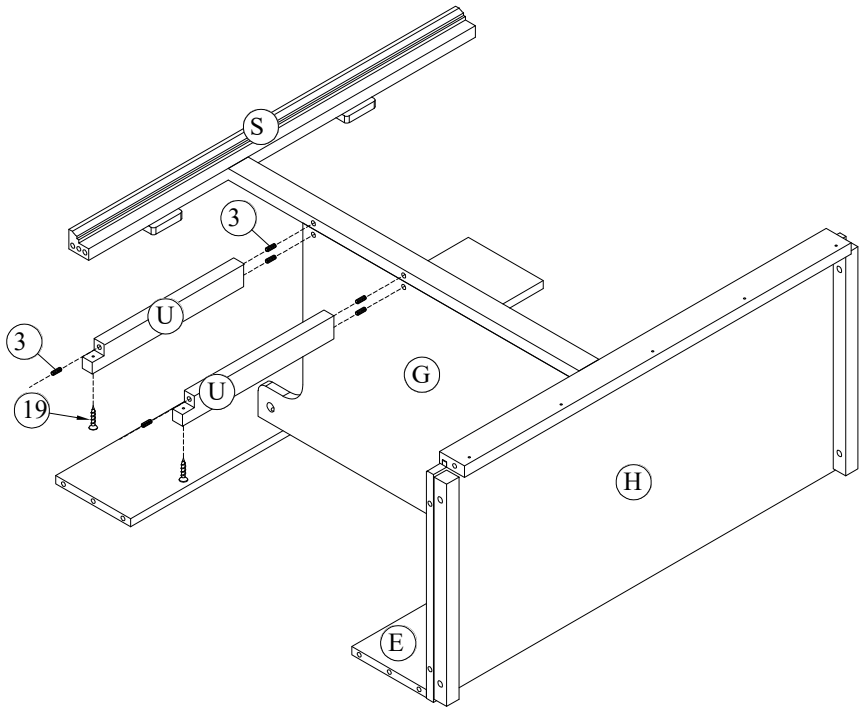

ROTATE

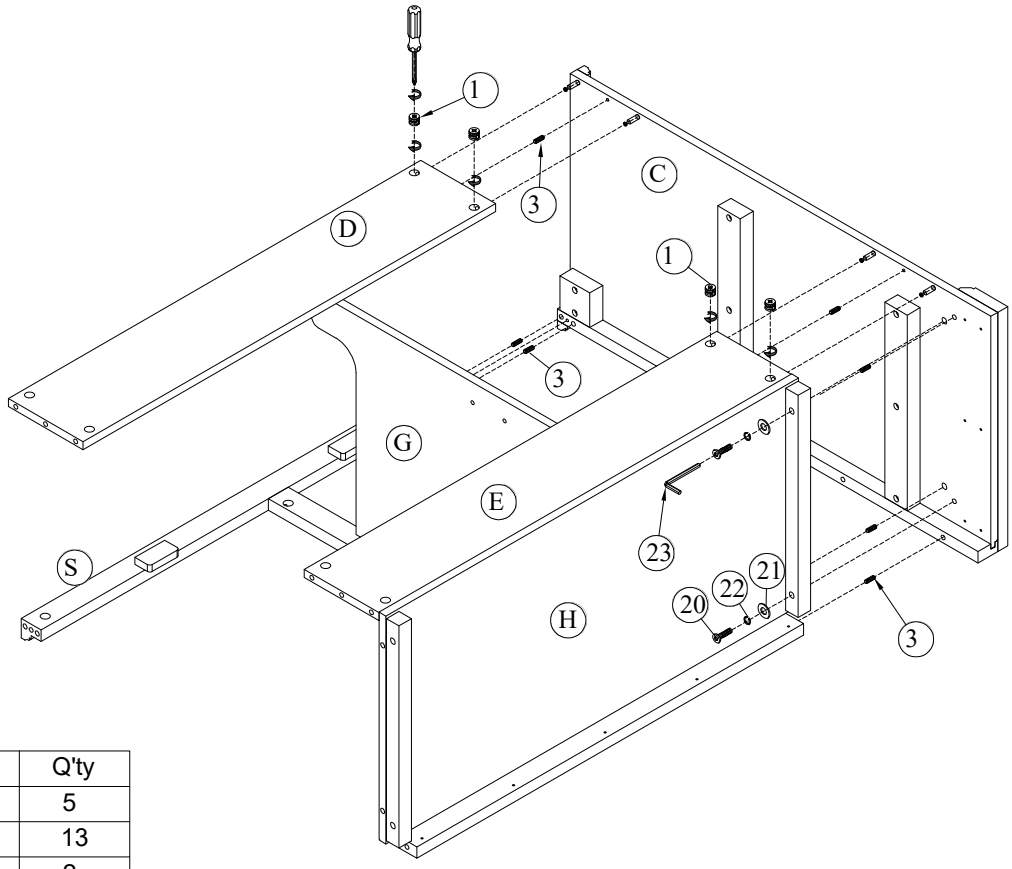

No	Hardware	Q'ty
1	Cam Lock	5
3	Wooden	13
19	Screws	2
20	Allen Bolts	2
19	Flat Washers	2
22	Lock washers	2
23	Allen key	1

Step 4

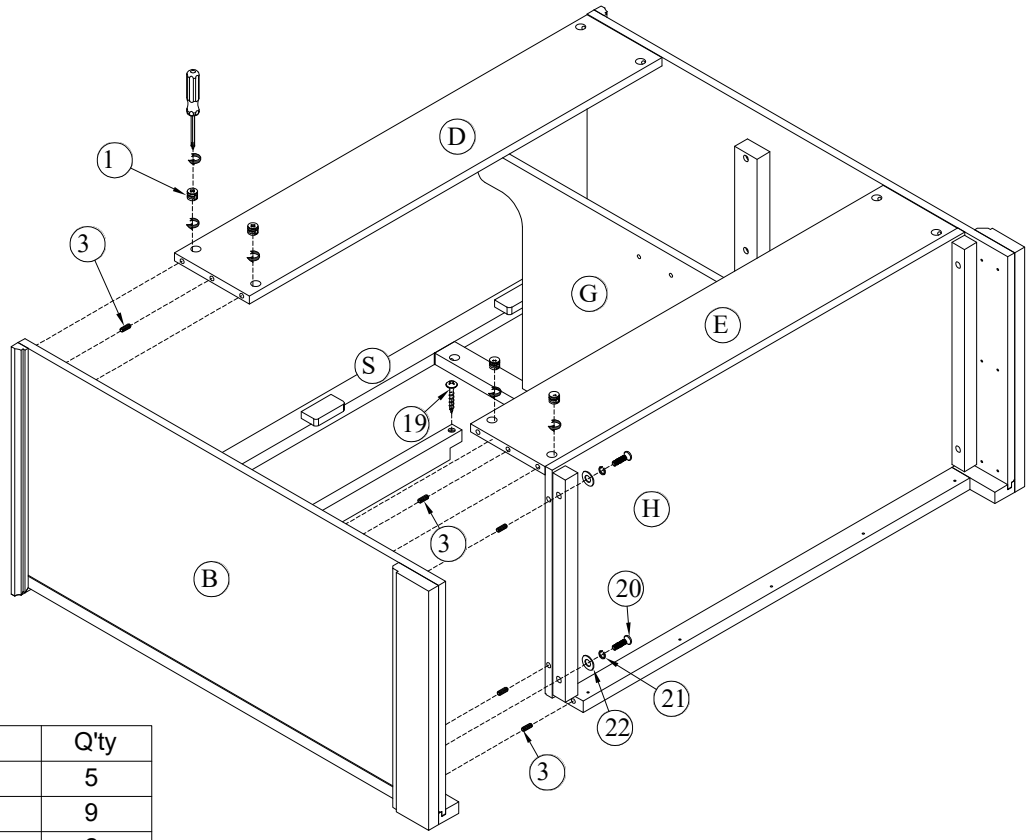

No	Hardware	Q'ty
1	Cam Lock	5
3	Wooden	9
19	Screws	2
20	Allen Bolts	2
21	Flat Washers	2
22	Lock washers	2
23	Allen key	1

Step 5

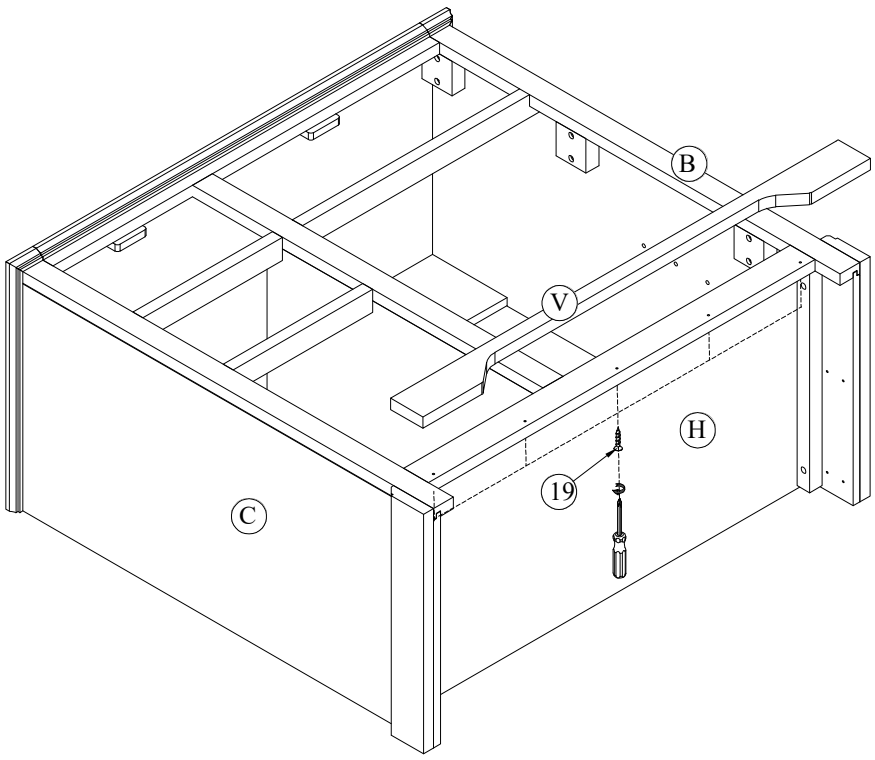

No	Hardware	Q'ty
19	Screws M4x30	5

Step 6

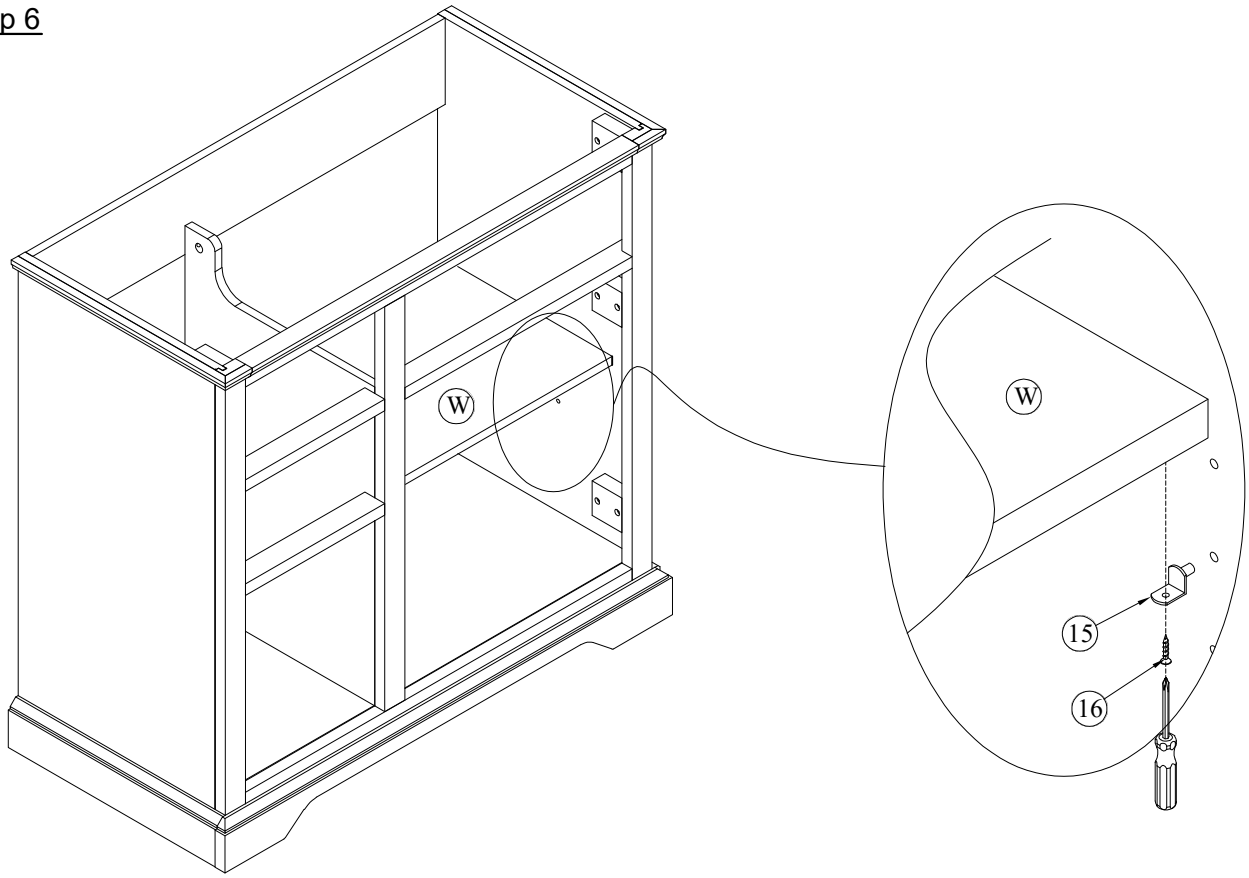

No	Hardware	Q'ty
15	Shelf Support	4
16	Screws M3.5 x 12	4

Step 7

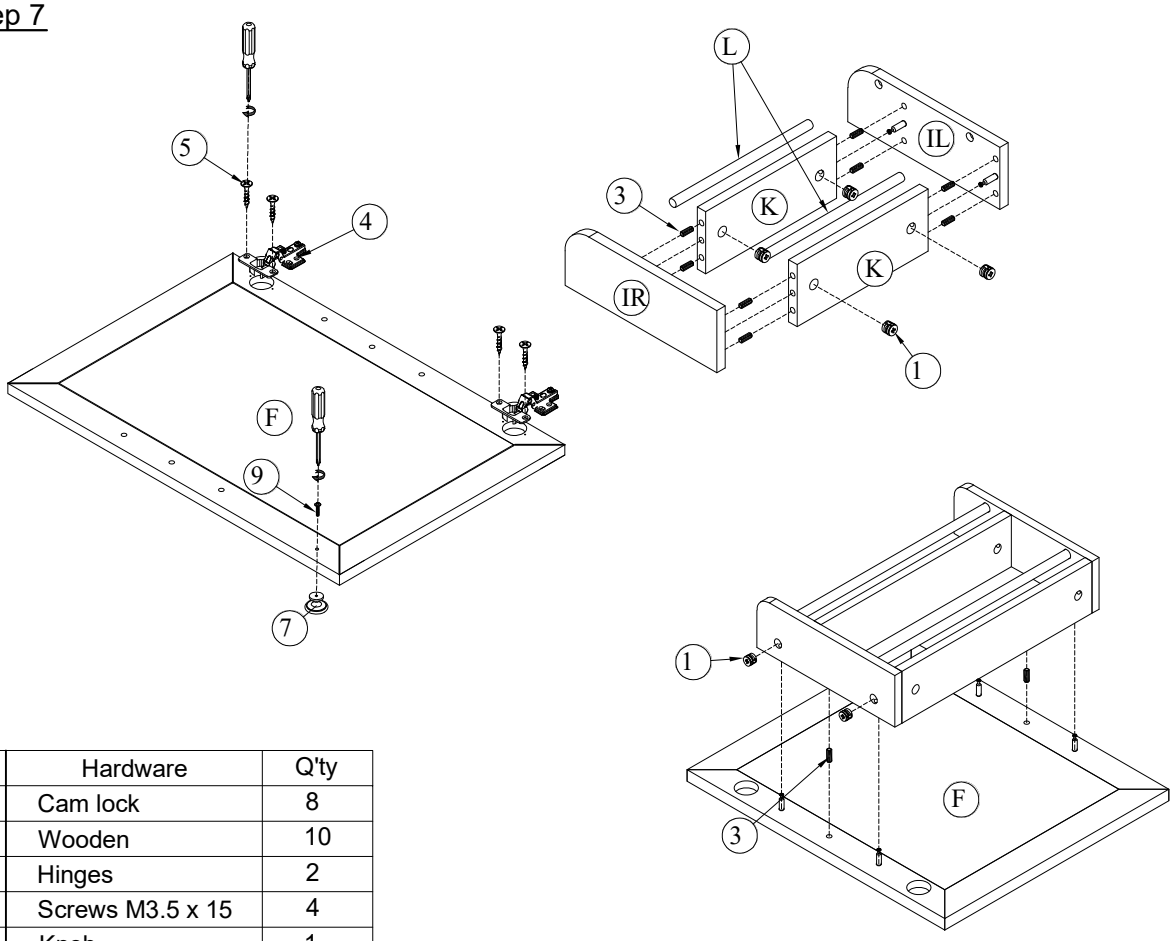

No	Hardware	Q'ty
1	Cam lock	8
3	Wooden	10
4	Hinges	2
5	Screws M3.5 x 15	4
7	Knob	1
9	Screws M4 x 25	1

Step 8

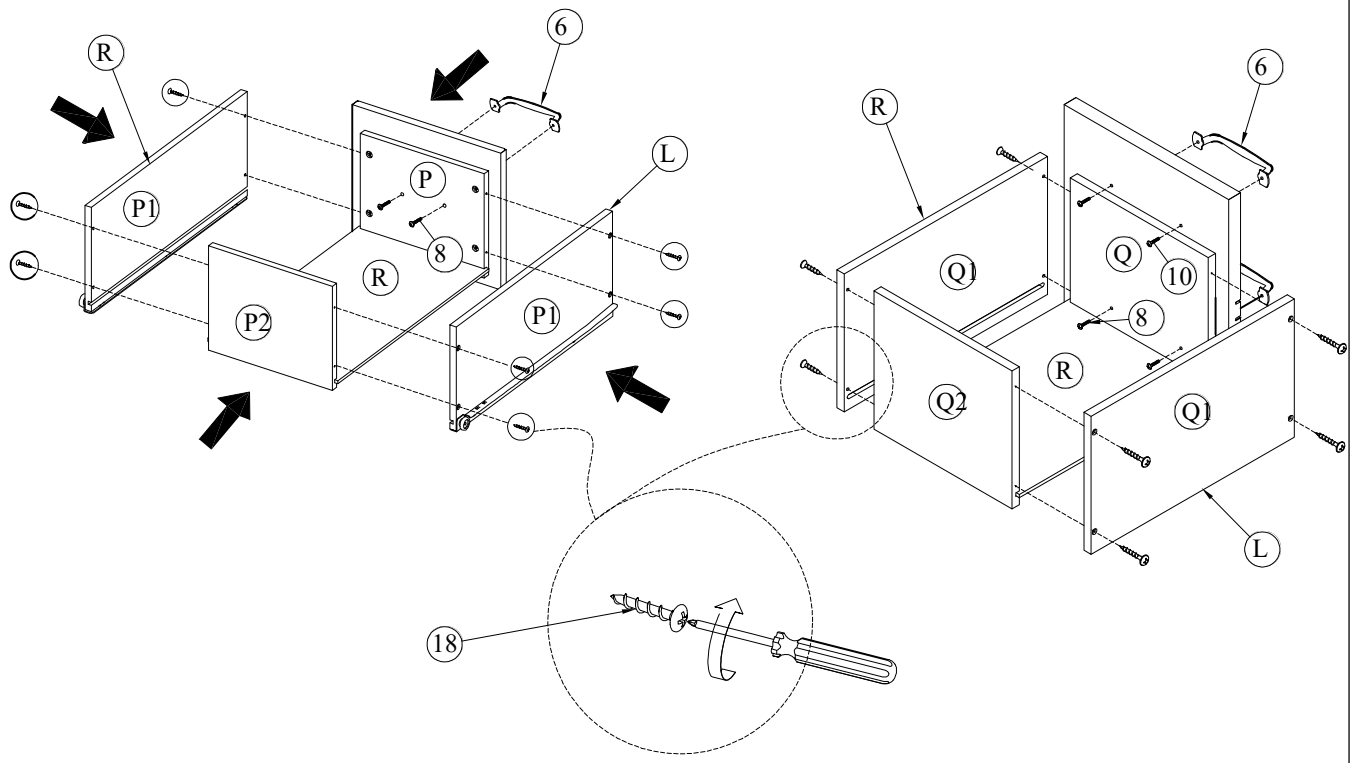

No	Hardware	Q'ty
18	Screws M4 x 20	16
6	Handle	3
8	Screws M4 x 30	4
10	Screws M4 x 17	2

Step 9

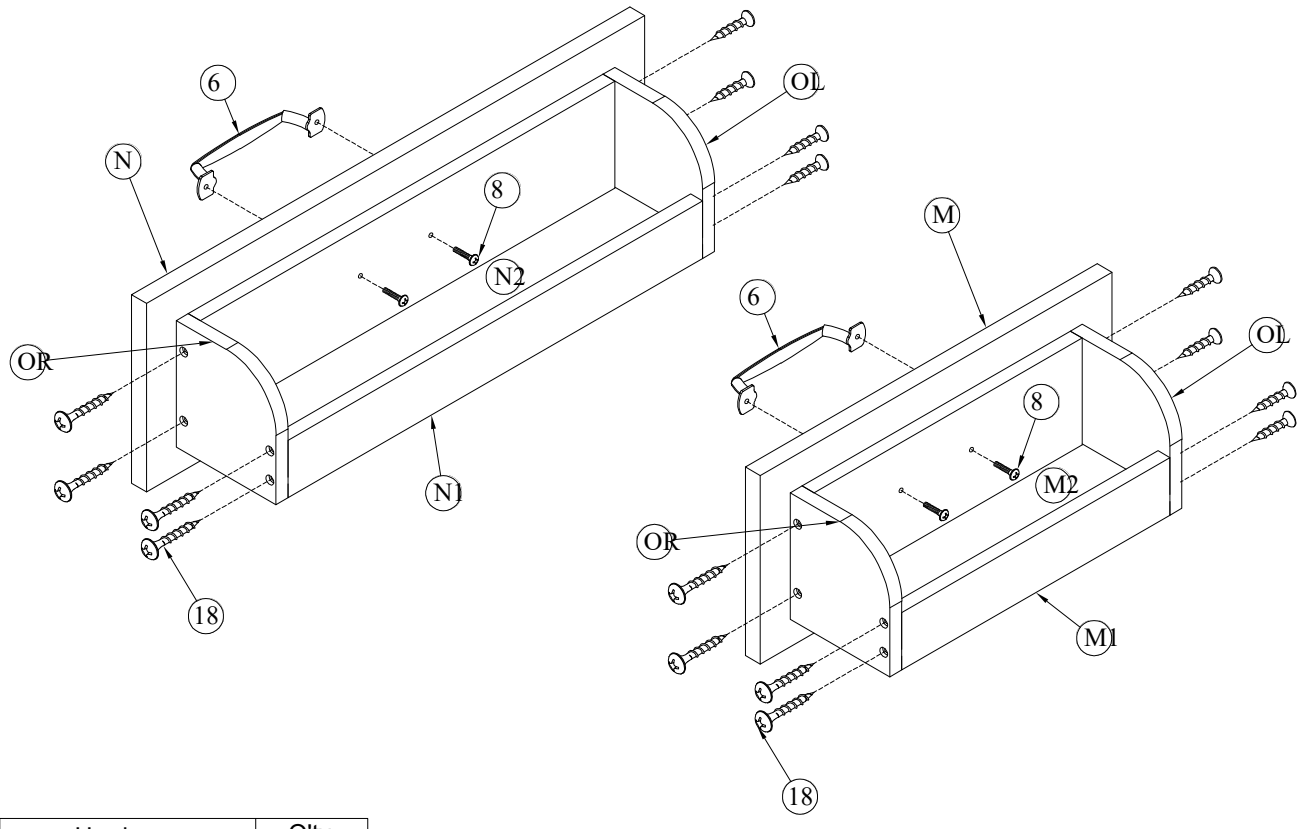

No	Hardware	Q'ty
18	Screws M4 x 20	16
6	Handle	2
8	Screws M4 x 30	4

Step 10

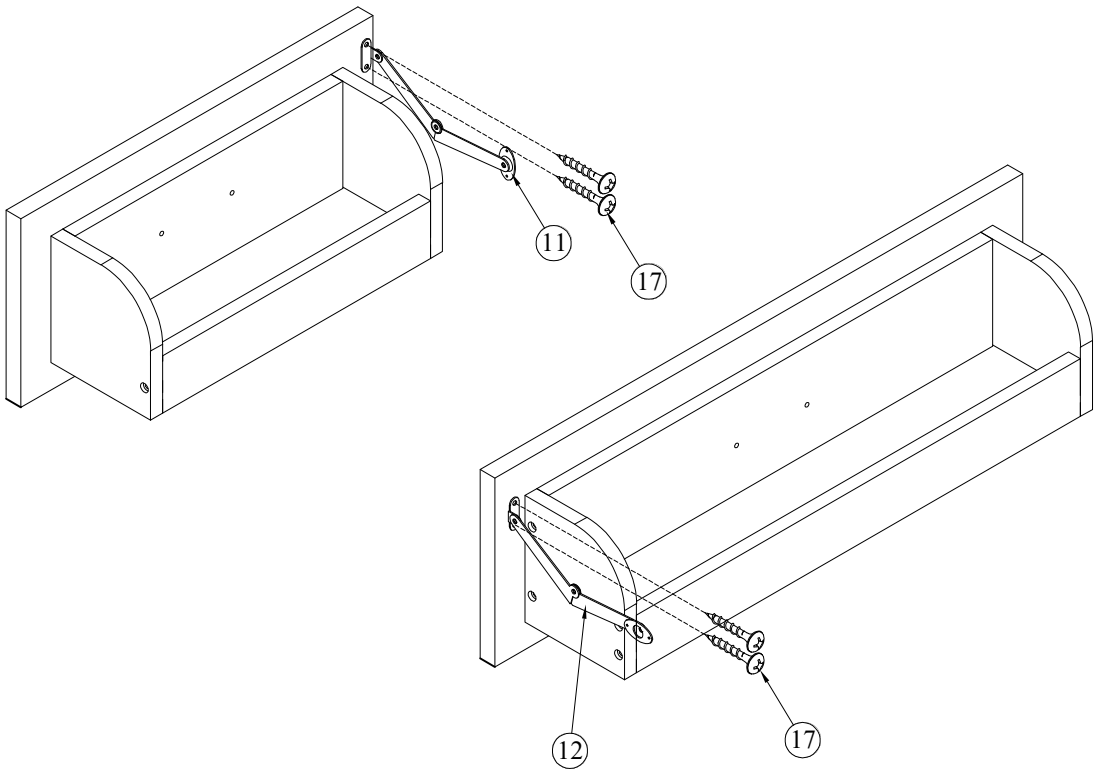

No	Hardware	Q'ty
11	Rod Support hinges	1
12	Rod Support hinges	1
17	Screws M3.5 x 12	4

Step 11

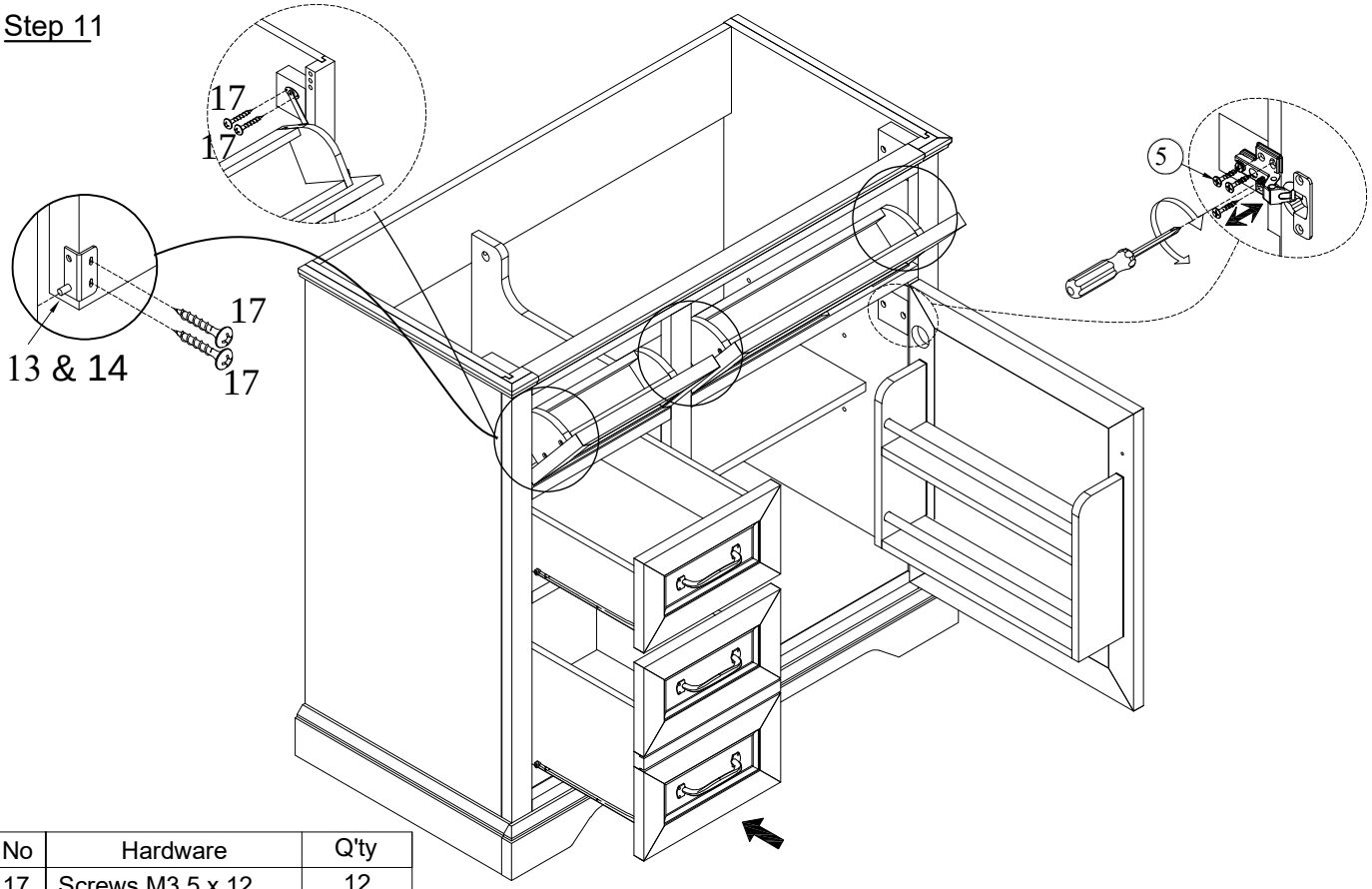

No	Hardware	Q'ty
17	Screws M3.5 x 12	12
5	Screws M3.5 x 15	8
13	Swivel Hinges - Right	2
14	Swivel Hinges - Left	2

Step 12

