ASSEMBLY INSTRUCTIONS

KING BED WITH HEADBOARD

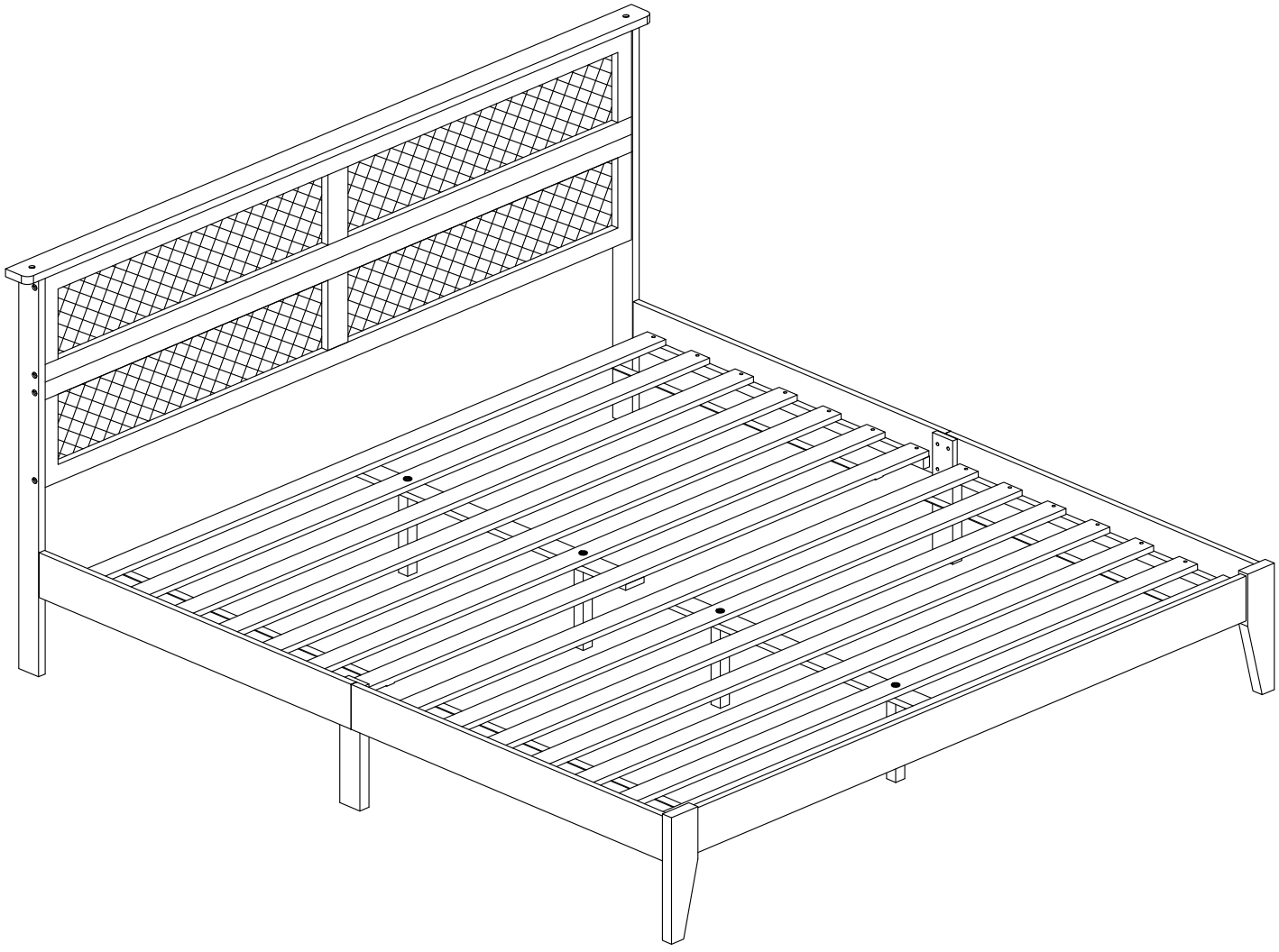

Detail View

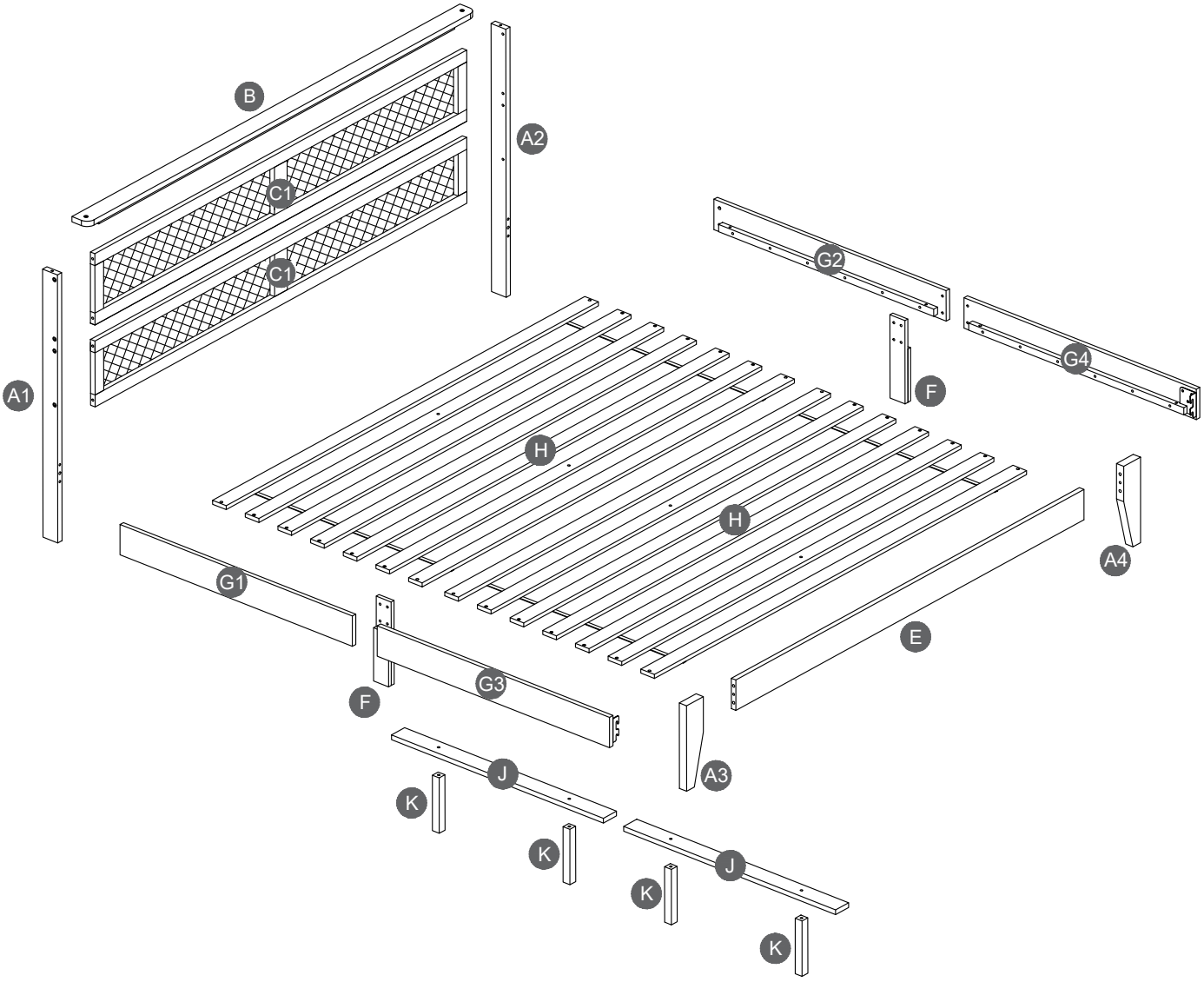

Part List

A1 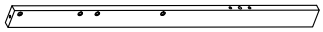 Leg (Headboard Left) - 1pc	**A2** 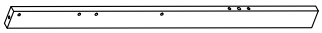 Leg (Headboard Right) - 1pc	**A3** 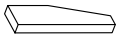 Leg (Footboard Left) - 1pc
A4 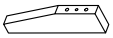 Leg (Footboard Right) - 1pc	**B** 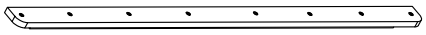 Top Panel (Headboard) - 1pc	**C1** 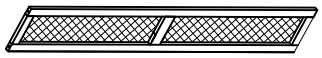 Middle Panel (Headboard) - 2sets
E 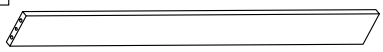 Panel (Footboard) - 1pc	**F** 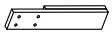 Side Rail Support (Left & Right) - 2pcs	**G1**  Side Rail Left (Headboard) - 1pc
G2  Side Rail Right (Headboard) - 1pc	**G3** 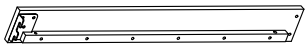 Side Rail Left (Footboard) - 1pc	**G4** 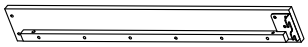 Side Rail Right (Footboard) - 1pc
H 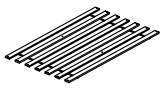 Bed Slats - 2Sets	**J**  Center Rail - 2pcs	**K** 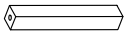 Support Leg - 4pcs

Hardware List

1 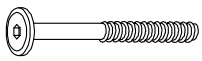 M6 x 60mm JCBC (10pcs)	2 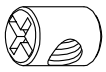 M6 x 15mm Barrel Nut (12pcs)	3 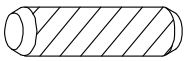 M10 x 30mm Wood Dowel (6pcs)
4 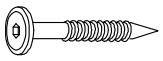 M6 x 40mm JCBC-W (2pcs)	5  M4 x 32mm CSK Screw (3pcs)	6 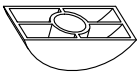 M6 Half Moon Nut (2pcs)
7  Flat Washer (2pcs)	8  Split Lock Washer (2pcs)	9 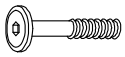 M6 x 30mm JCBC (8pcs)
10 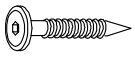 M6 x 30mm JCBC-W (8pcs)	11  M4 x 25mm CSK Screw (20pcs)	12 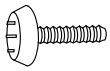 Adjustable Screw (4pcs)
13  Flat M6 Washer (8pcs)	14 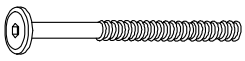 M6 x 110mm JCBC (4pcs)	15 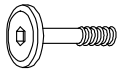 M8 x 20mm JCBB (4pcs)
16  Sticker Cap (10pcs)	17 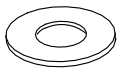 M8 Flat Washer (4pcs)	18 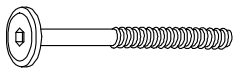 M8 x 80mm JCBB (4pcs)
19  M4 Allen Key (1pc)	20  M5 Allen Key (1pc)	

ASSEMBLY TOOLS REQUIRED (NOT INCLUDED)

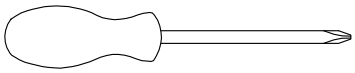

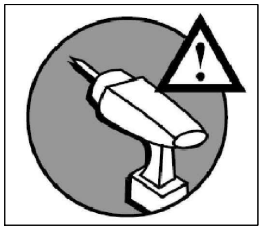

PLEASE BE CAREFUL DO NOT DAMAGE THE HOLE POSITION WHEN YOU USE POWER TOOLS !

STEP 1:

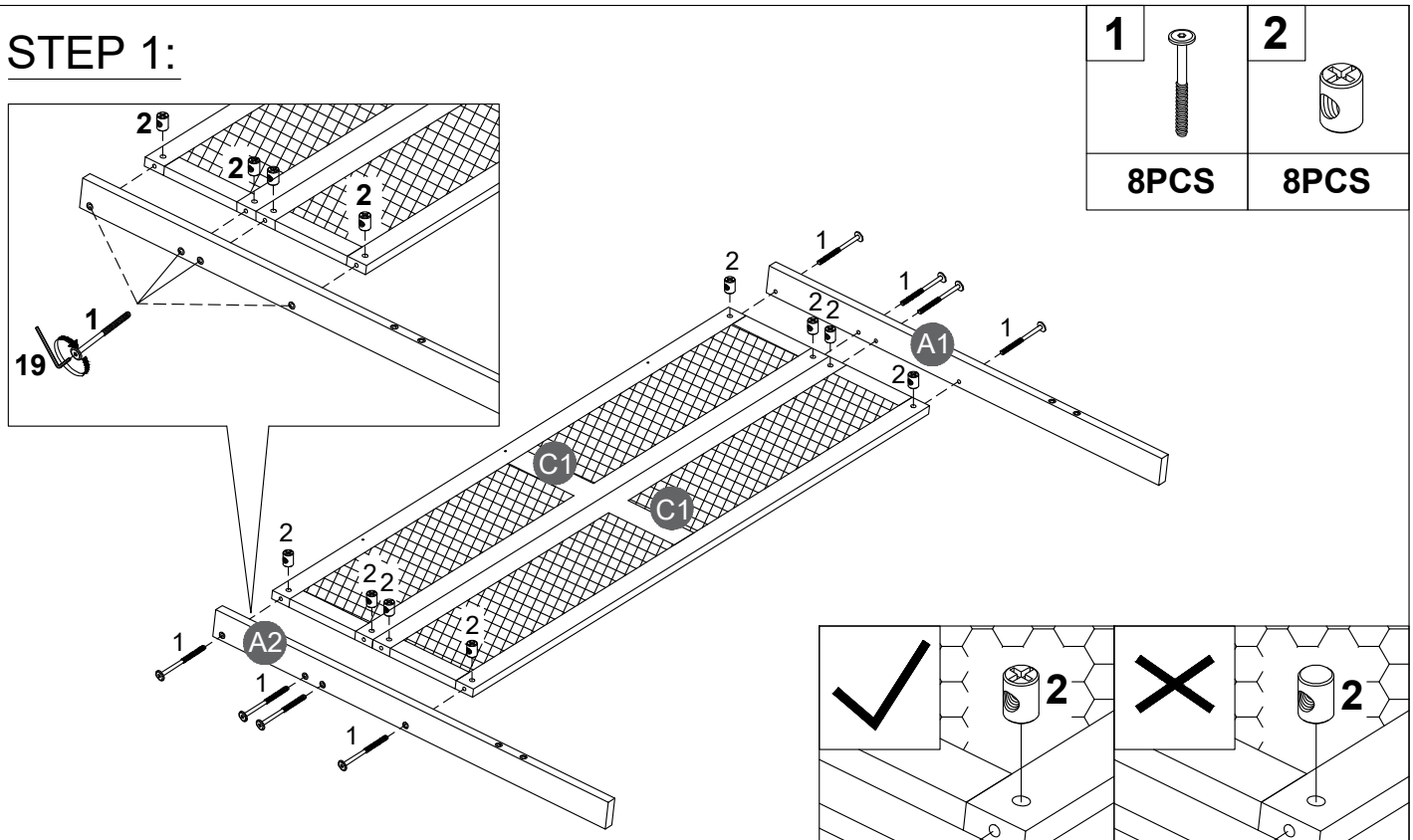

Note:Part2 will face up with the "x" mark on it, otherwise it cannot be tightened

STEP 2:

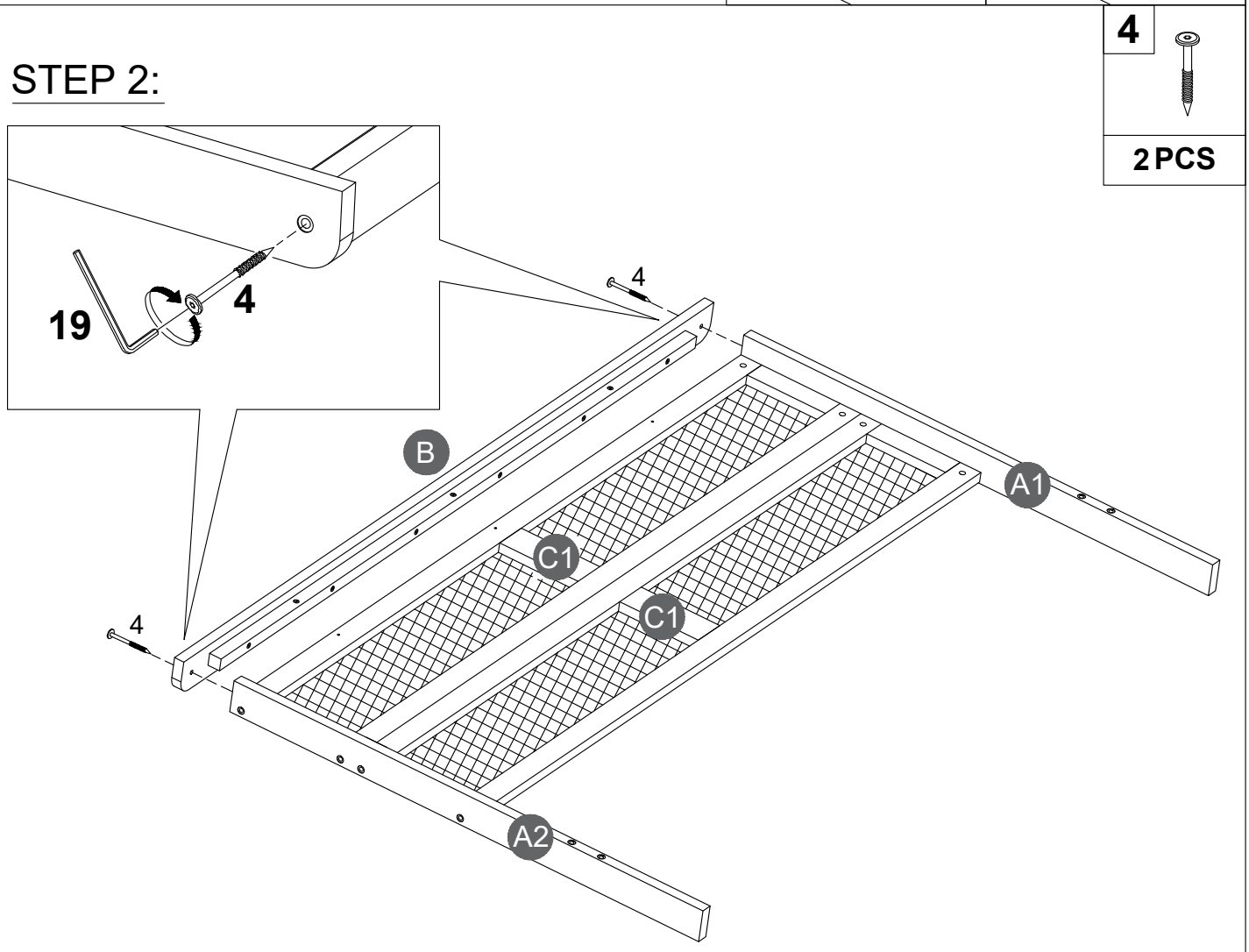

STEP 3:

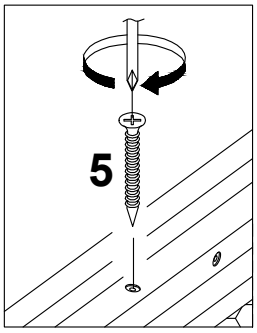

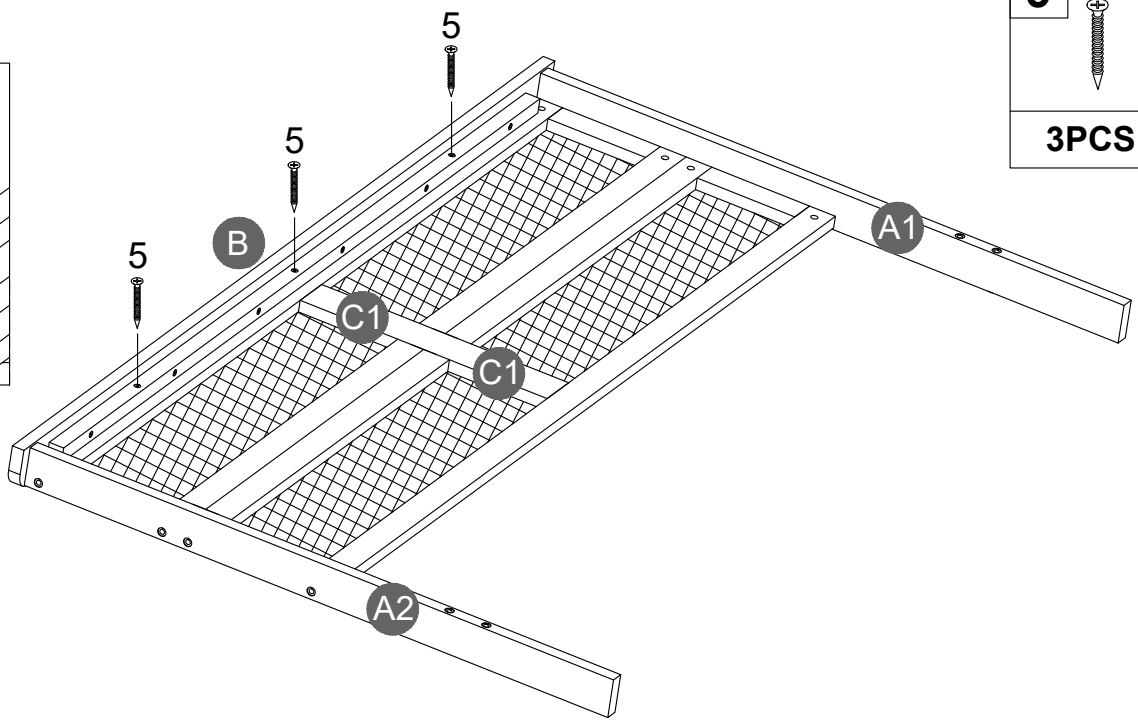

5
3PCS

STEP 4:

1	3	6	7	8
2PCS	4PCS	2PCS	2PCS	2PCS

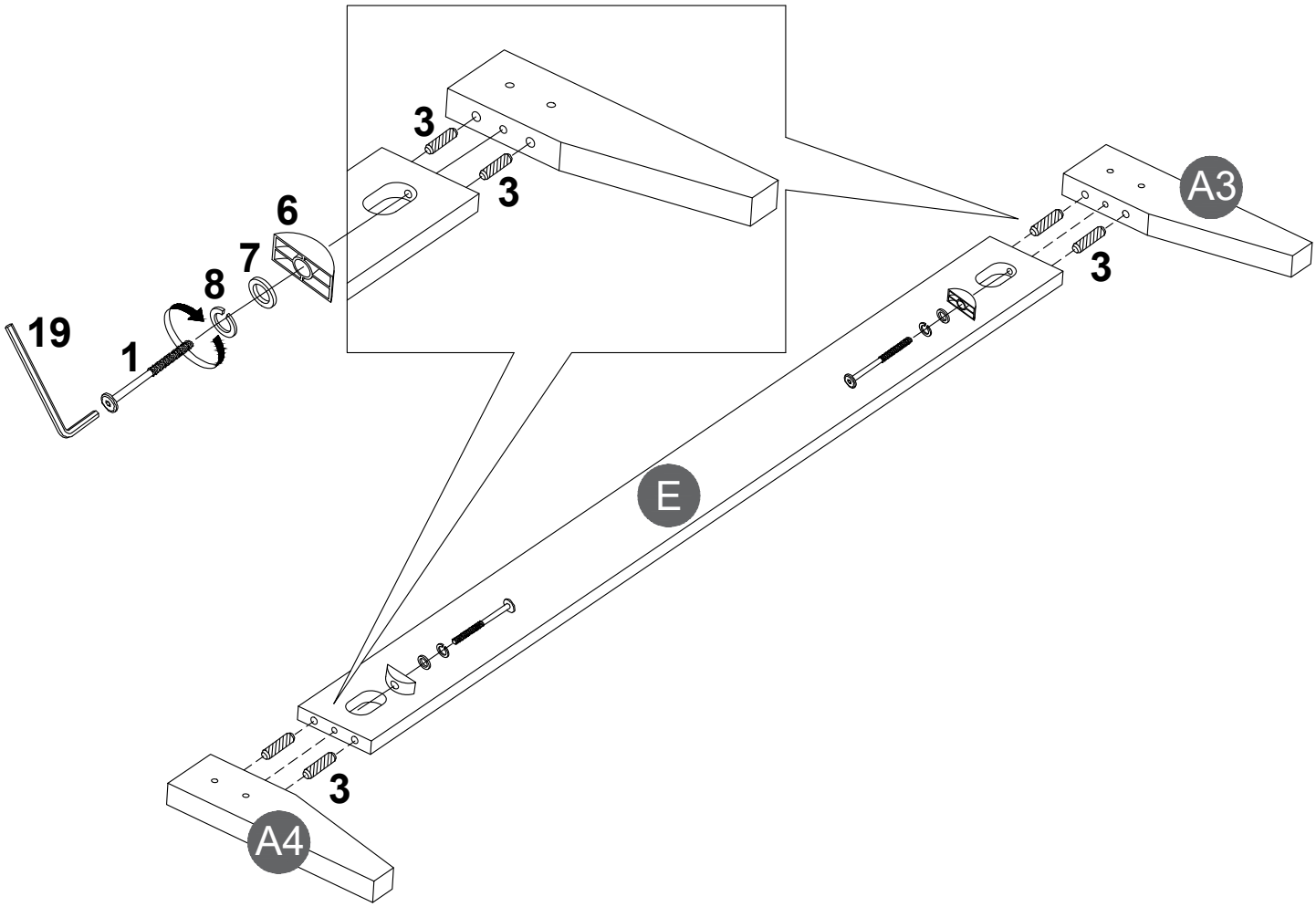

STEP 5:

9	13
8PCS	8PCS

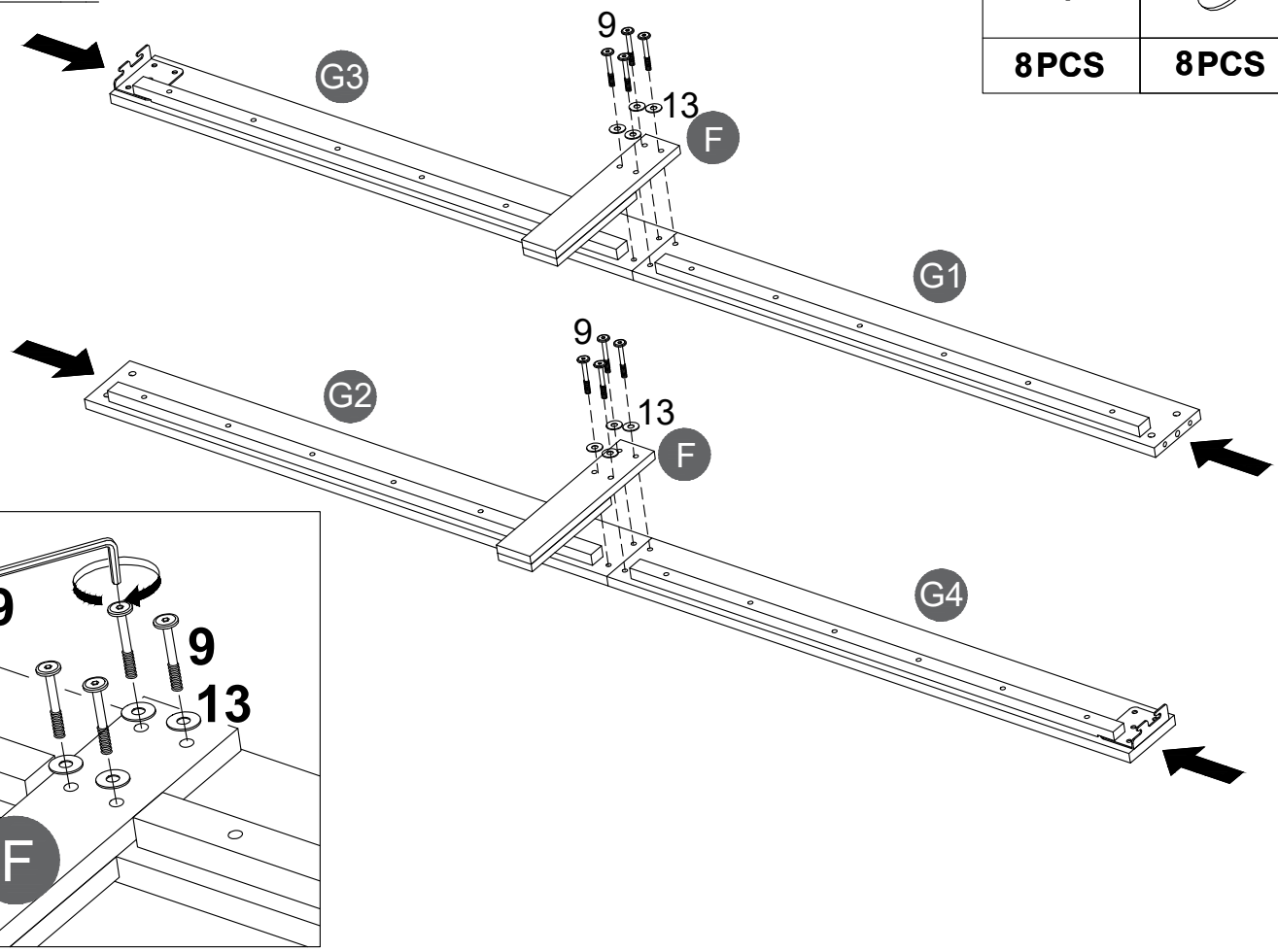

STEP 6:

2	3	14	15
4PCS	2PCS	4PCS	4PCS

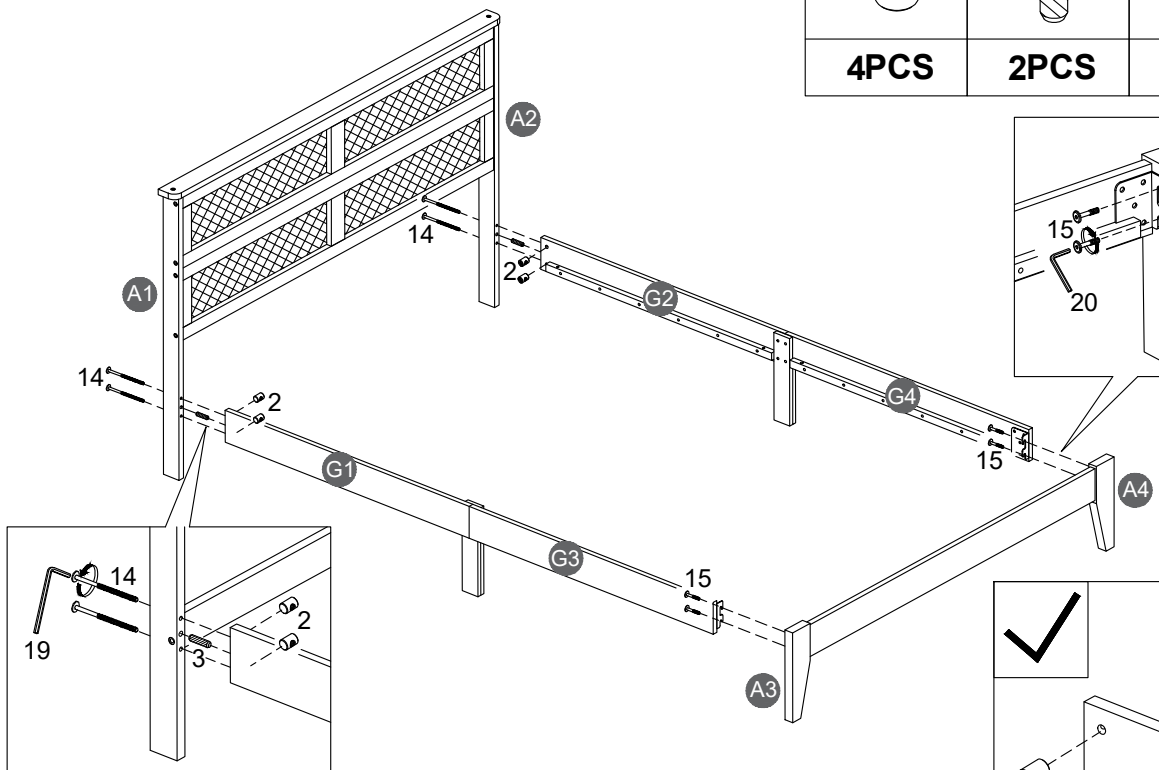

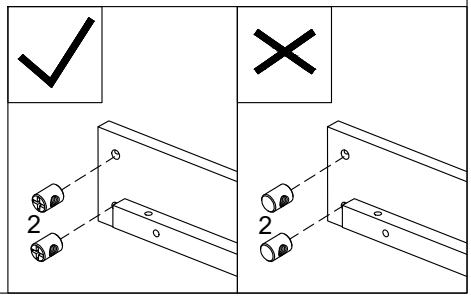

Note:Part2 will face up with the "x" mark on it, otherwise it cannot be tightened

STEP 7:

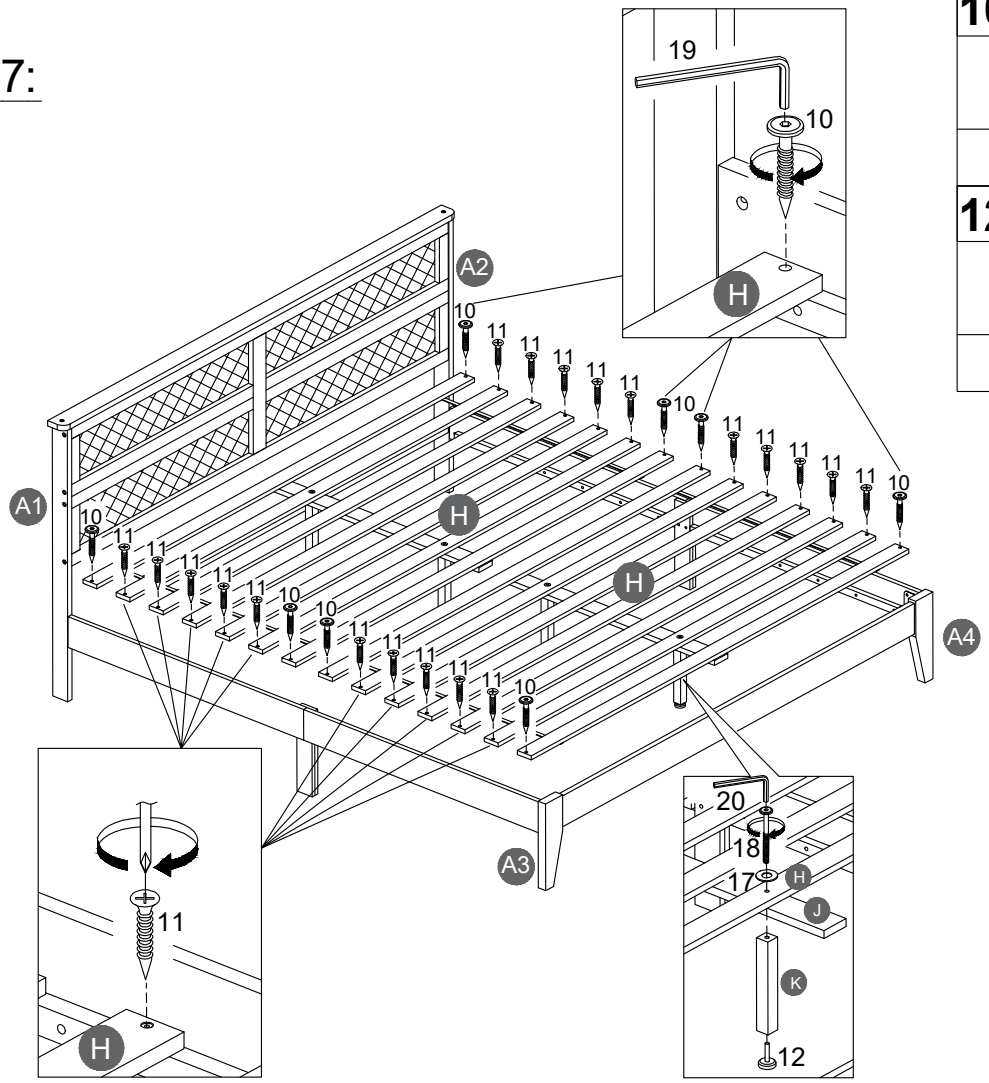

10	11
8 PCS	20 PCS
12	**17**
4 PCS	4 PCS
18	
4 PCS	

STEP 8:

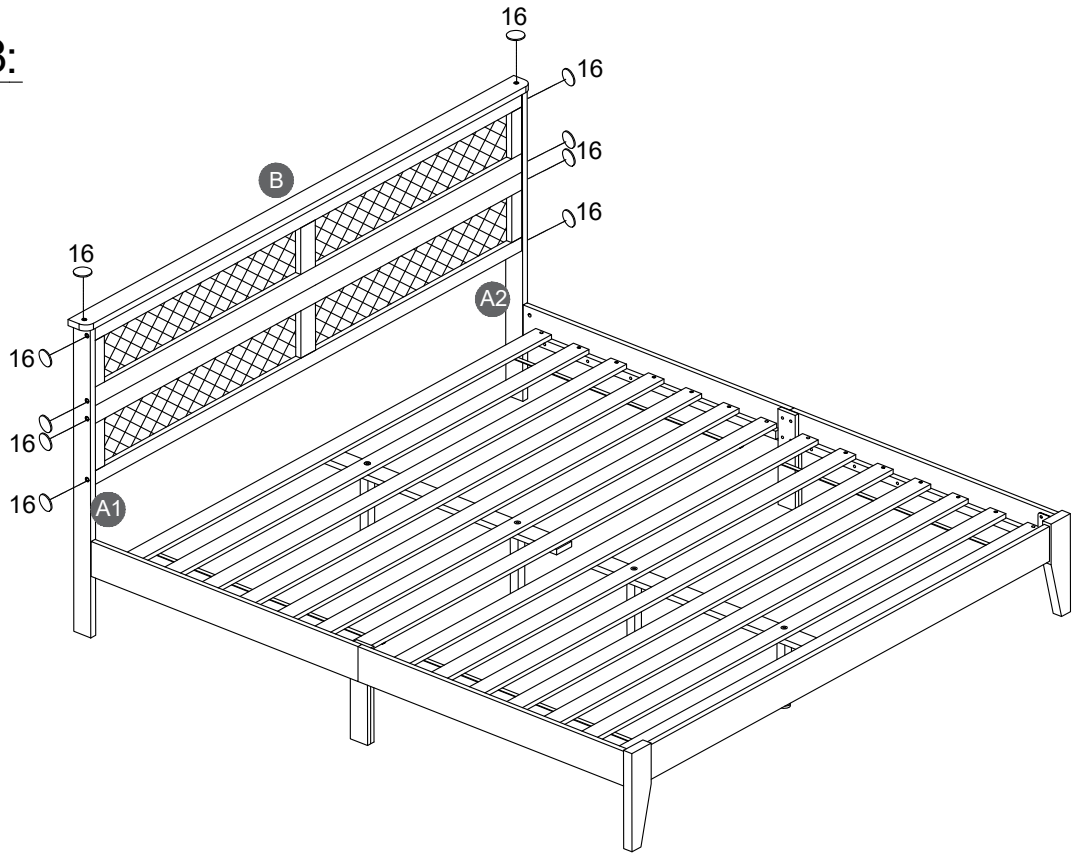

16
10PCS