INSTALLATION INSTRUCTIONS

TK19168 SHOWER DOOR

INSTALLATION VIDEO

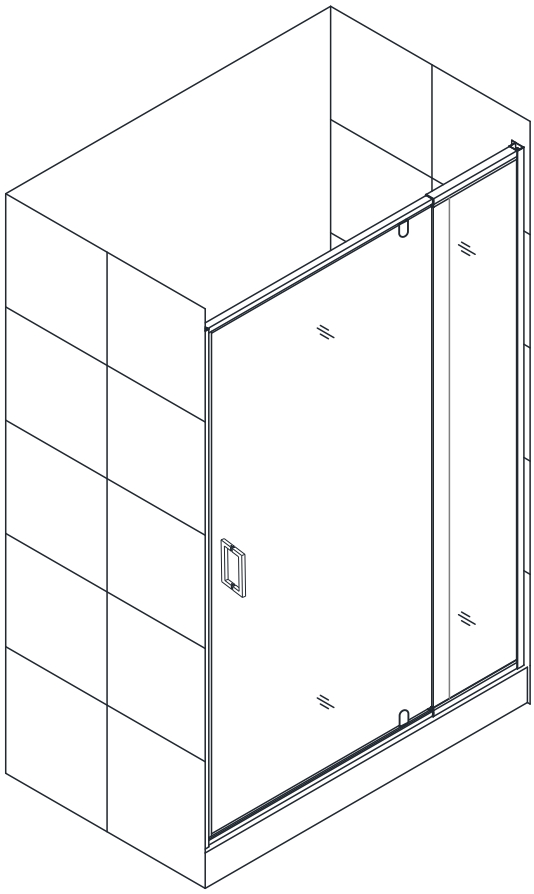

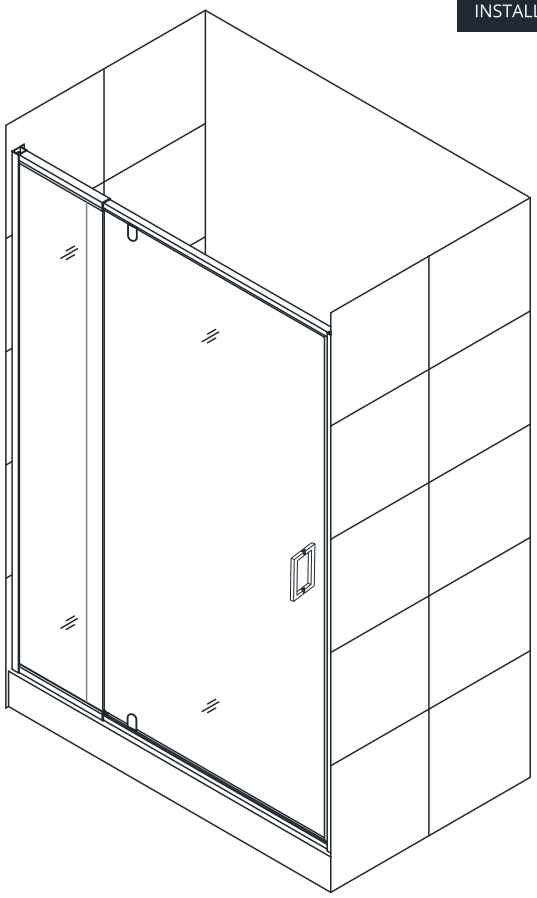

TK19168-2872 CH	28''-32''x72''CH	TK19168 CH	32''-36''x72''CH
TK19168-2872 MB	28''-32''x72''MB	TK19168 MB	32''-36''x72''MB
TK19168-4872 MB	44''-48''x72''MB	TK19168-4272 MB	38''-42''x72''MB

- **Reversible for left or right door opening installation**

Customer service:

For more information about our products, please contact us below:

US:+1(832)3768443 **sales@casadekorus.com**

Do not return product to the store. Contact us directly with any questions.

12/11/26 Rev.2.0

◆ Preparation

1. Prior to installation, examine all boxes and packages for shipping damage and compare the piece count with your packing slip. After opening all boxes and packages read this introduction carefully. Check that all of the needed parts are included in the package by checking off the components on the "Detailed Diagram of Shower Door Components". If the unit has been damaged, has a finishing defect, or has missing parts, please contact our customer support department within **3 business days** of the delivery date. Please note that we **will not replace any damaged products or missing parts free of charge after 3 business days or if the product has been installed.** Feel free to contact us if you have any questions, and please provide an order number, job name or other proof of purchase to help us identify your original order.

2. **Please note that you should consult your local building codes with questions about installation compliance standards. Building and plumbing codes may vary by location, and we are not responsible for code compliance standards for your project and will not accept any returns**.

3. If this unit is going to be installed in a new construction, please install all of the required plumbing and drainage before installing the shower. **Use a competent and licensed (if required by local code) plumber for all plumbing installation.**

4. Please make sure that prior to beginning the installation, the surfaces are leveled and solid and will be able to support the total weight of the unit. Also make sure the walls are at right angles. Irregular installation surface level, radius corners or improper angle of side walls will result in serious problems for your installation. Please, note that some adjustments and drilling may be necessary during the installation process.

5. Please protect all primary surfaces of the product during installation. **Never set your glass down directly onto a tile floor.** Leave corner protectors in place until necessary to remove them. Always use a piece of wood or cardboard to protect the bottom edge and corners of the glass prior to and during installation.

6. This unit must be installed upon a finished threshold and against finished walls.

7. This model has 4" of total width adjustment: including 1/2" of adjustment per wall profile for out-of-plumb wall conditions plus 3" of overall width adjustment with the expanding top and bottom rails. **Be sure that you have ordered the correct model size to fit your finished opening.**

8. **This model requires a minimum 1-3/8" of flat threshold space for installation**.

9. **Professional installation recommended.**

NOTE: This door is reversible for right or left-hand door installation. The right-hand door installation is shown as an example throughout this manual.

◆ General Information

Inspect the product immediately upon receipt for transit damage, missing packs/parts or manufacturing fault. Damage reported later will not be accepted. Handle the product with care avoiding knocks and shock loading to all sides and edges of the glass.

Notes: Safety glass can not be re-worked.

Read these instructions carefully before start of installation.
Special care should be taken when drilling walls to avoid hidden pipes or electrical cables.
Note: This product is heavy and may require two people to install.

Aftercare instructions

After use, your shower should be cleaned with soap and water. This is particularly important in hard water districts where insoluble lime salts maybe deposited and allowed to build up. Cleaners of a gritty or abrasive nature should not be used. Care should be taken to avoid contact with strong chemicals, they can be used but with caution, if in doubt contact the manufacturer of the cleaner in question.
Keep these instructions for aftercare and customer service details.

Tools Required

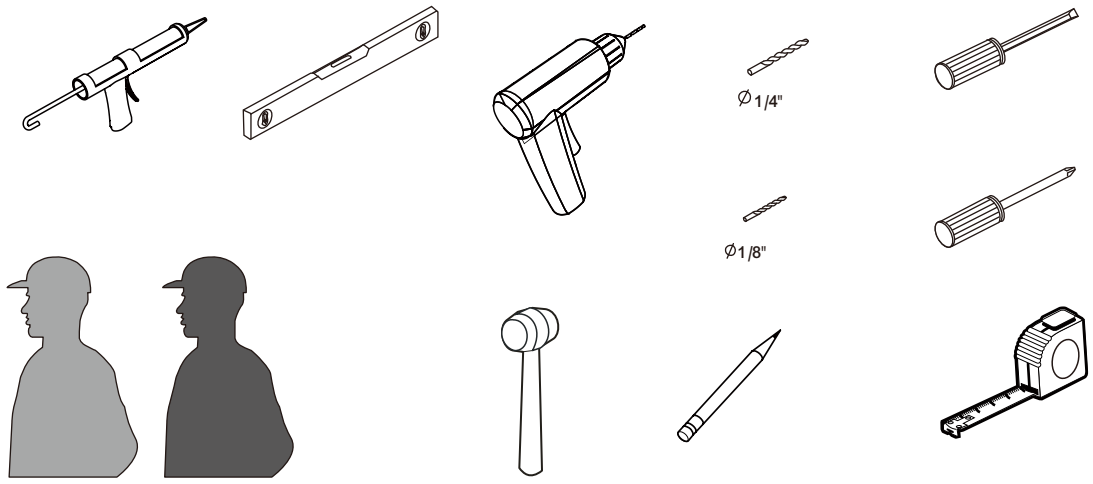

This product is heavy and may require two people to install.

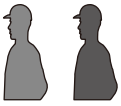

◆ Assembly Drawing

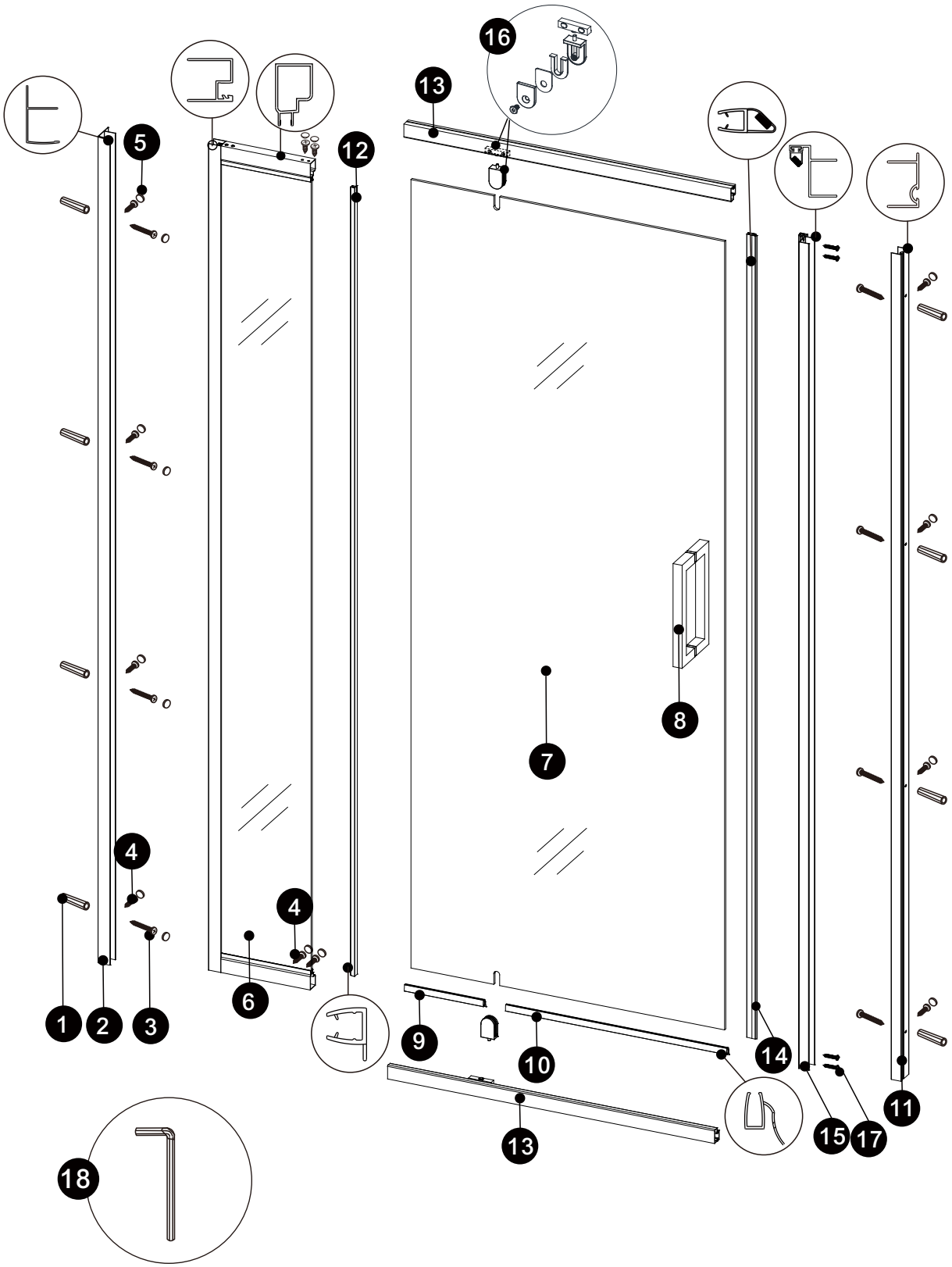

PACKING LIST

PART #	DESCRIPTION	Q'TY
1	Wall Plugs 	8pcs
2	Wall Jamb-A 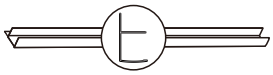	1pc
3	Screws ST4x35 	8pcs
4	Screws ST4x10 	12pcs
5	Screw Caps 	16pcs
6	Fixed Panel 	1pc
7	Door Panel 	1pc
8	Handle 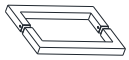	1set
9	Bottom Door Gasket-A 	1pc
10	Bottom Door Gasket-B 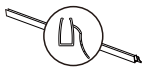	1pc
11	Wall Jamb-B 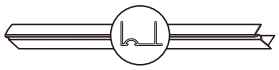	1pc
12	F-seal 	1pc
13	Aluminum-A 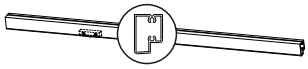	2pcs
14	Gasket-B 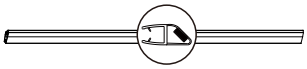	1pc
15	Aluminum-B 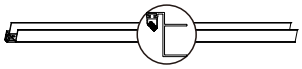	1pc
16	Pivot 	2sets
17	Screws ST3.5x20 	4pcs
18	Allen Wrench 	1pc

NOTE: Unpack your unit carefully and inspect it. Lay it out and identify all parts using the detailed diagram and packing list in this manual as a reference. Before discarding the carton, check for small hardware bags that may have fallen to the bottom of the box. If any parts are damaged or missing, please contact us for replacement. The shipping boxes may contain extra parts not used in your model model configuration.

NOTE: Retain these installation instructions for future reference.

◆ Door Assembly Diagram

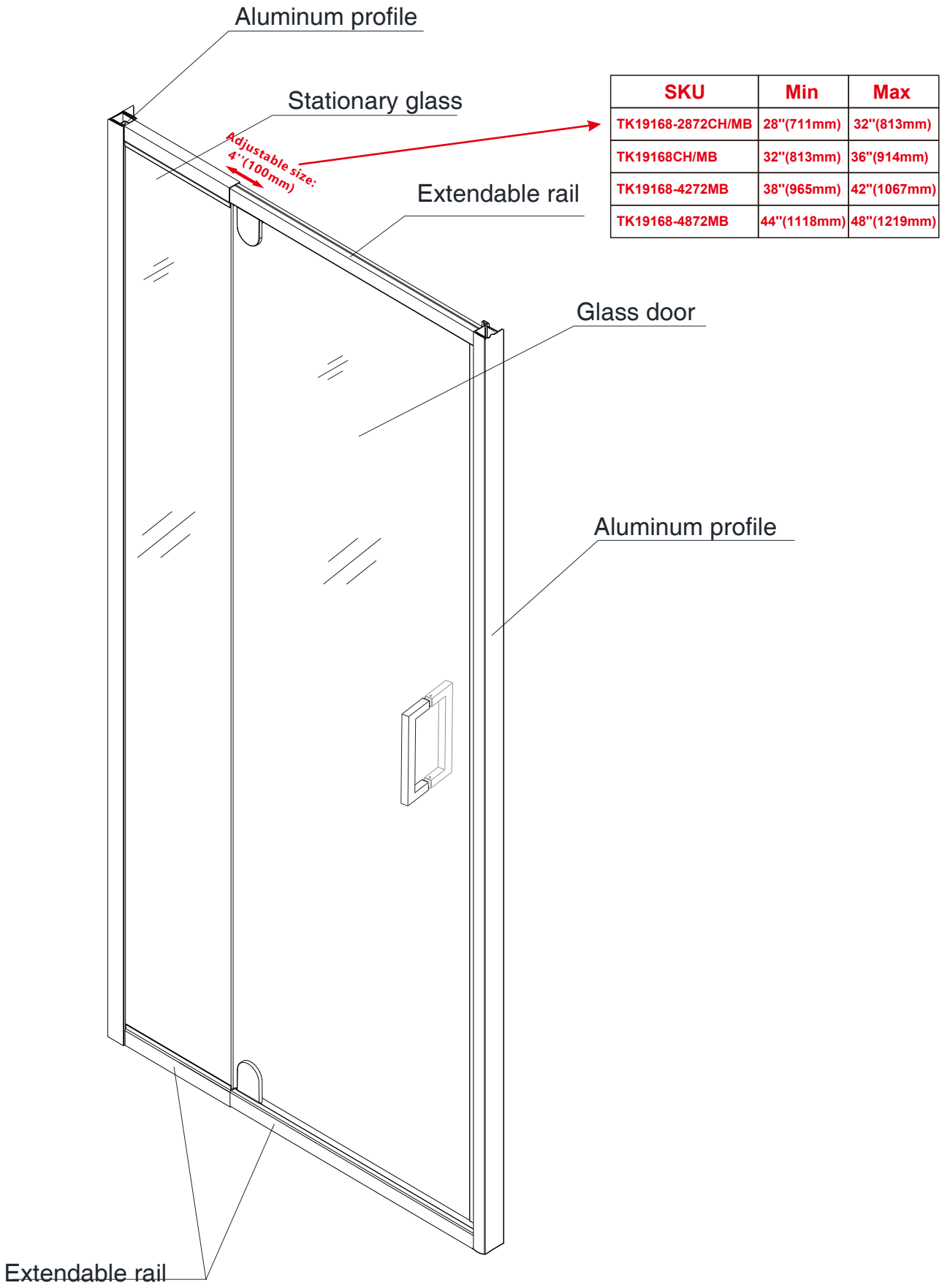

SKU	Min	Max
TK19168-2872CH/MB	28''(711mm)	32''(813mm)
TK19168CH/MB	32''(813mm)	36''(914mm)
TK19168-4272MB	38''(965mm)	42''(1067mm)
TK19168-4872MB	44''(1118mm)	48''(1219mm)

◆ Shower Door Installation

1. Prior to the Shower door installation, the installation of the shower base and plumbing must be completed.

   See Fig. 1 for details.

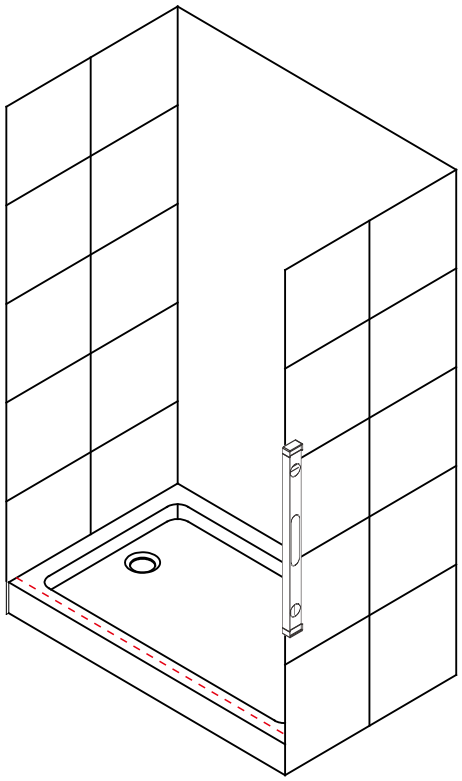

Fig. 1

2. A.Install the **wall jamb(11)**, to make sure the vertical installation.
   B.Place the **wall jamb(11)** into the correct position and mark the position of punch, using 6mm drill to punch.
   C.Using the **wall plugs (1)** and **screws ST4x35(3)** to secure them to the wall.

   See Fig. 2 for details.

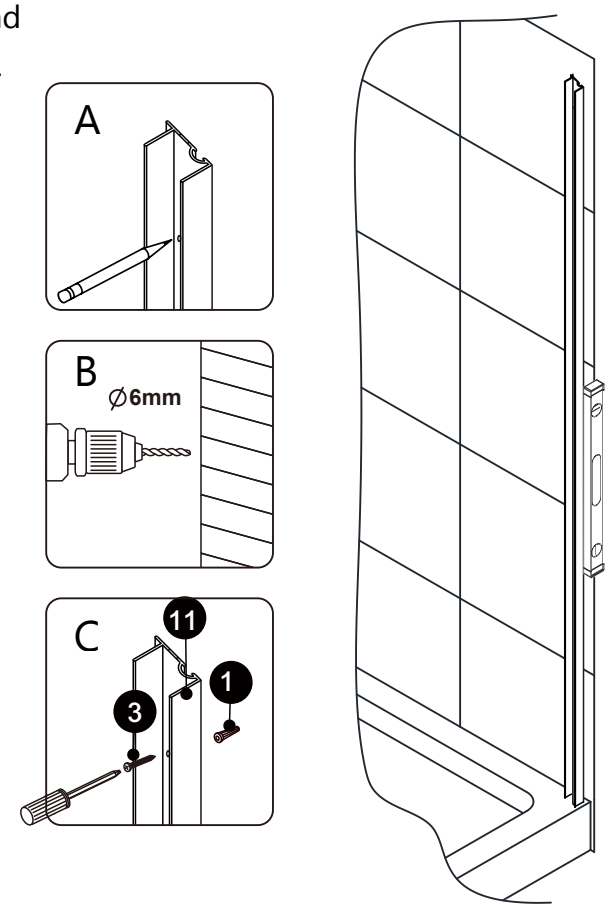

Fig. 2

3. A. Install the door glass and pivot assembly per the orientation shown in the illustration.
   B. Open the door. Apply **Bottom Door Gasket- A/B (9/10)** along the bottom of the door glass starting at the pivot and running to the end of the magnetic strike rail, trim off excess material. Fit the leftover cut gasket piece to the opposite bottom side of the door glass (away from the pivot) and trim to length. Secure both gasket pieces to the bottom edge of the glass door.
   C. Install **magnetic stripe (14)** on the vertical edge of the door panel. See Figure 3.
   D. Install **F- seal (12)** on the vertical edge of the fixed panel.
   E. Insert the right ends of the top and **bottom Aluminum A extrusions(13)** into **Aluminum B (15)**, then fasten with **ST3.5x20 screws (17)**.
   F. Insert the left ends of the top and **bottom Aluminum A (13)**into the **fixed panel (6)**.
   See Figure 3 & Figure 4.

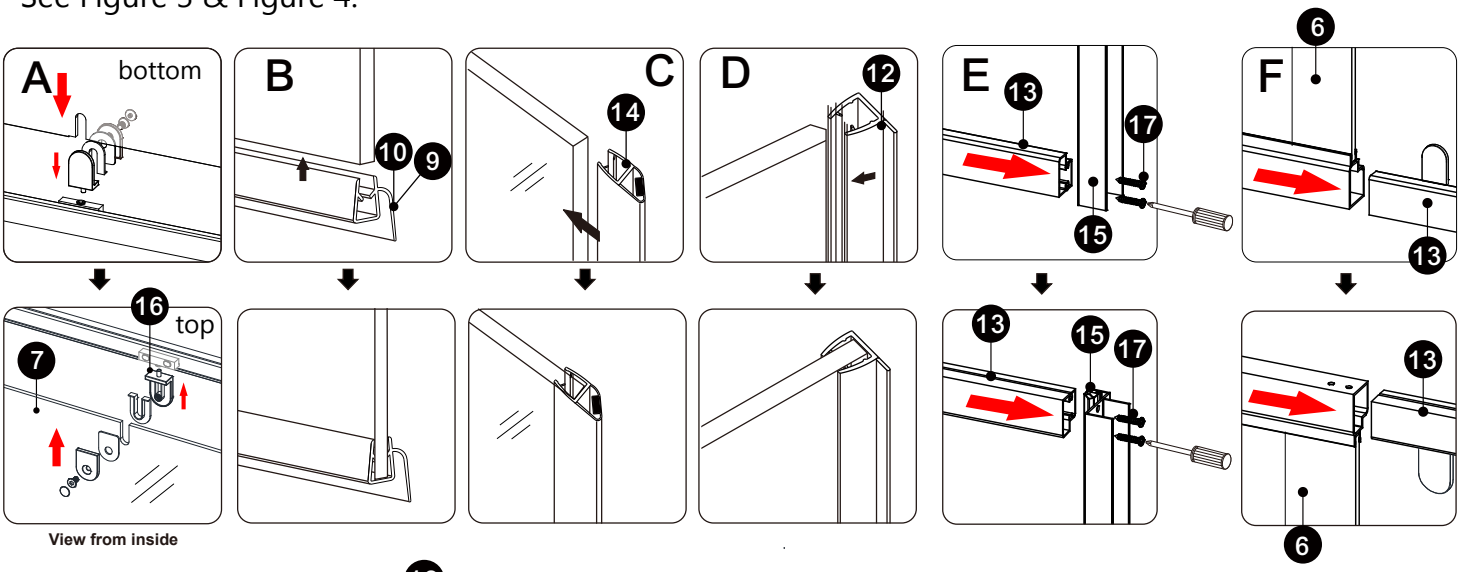

Fig. 3

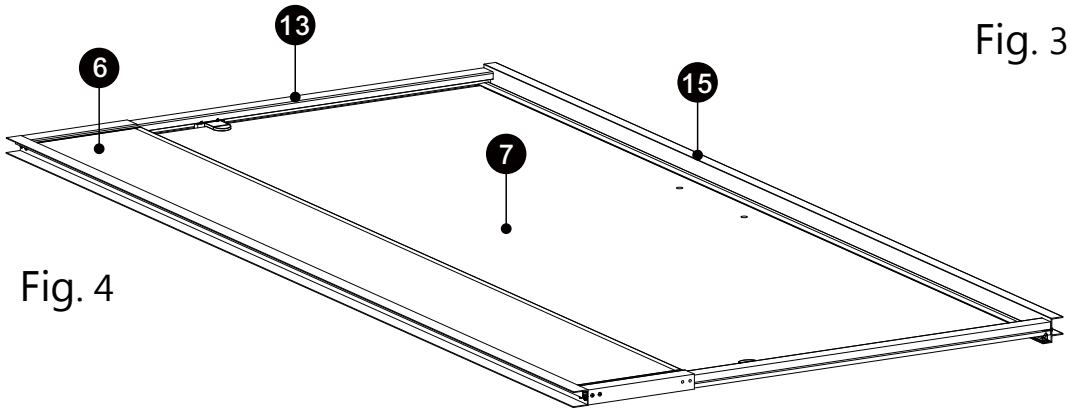

Fig. 4

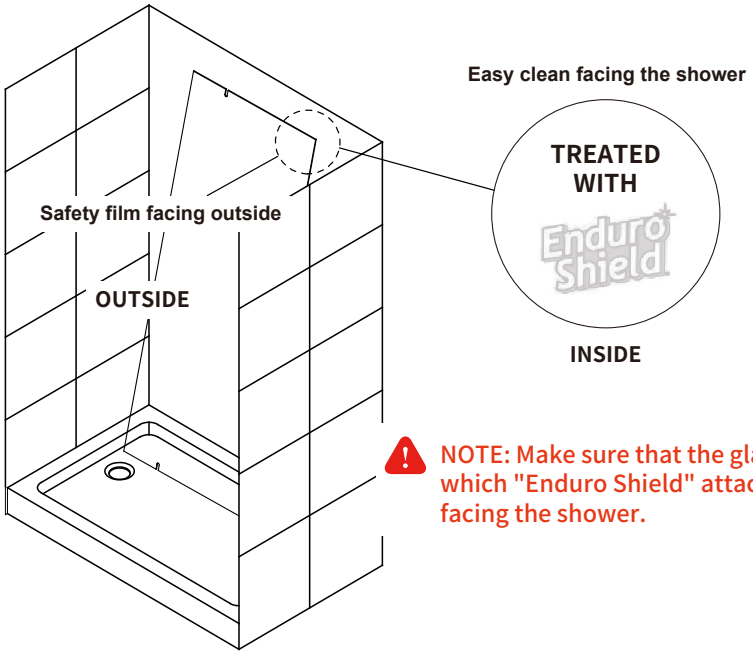

NOTE: Make sure that the glass to which "Enduro Shield" attached is facing the shower.

4. A. The assembled fixed panel insert into **wall jamb(2)** at left side
   B. Insert into the **wall jamb(11)** on right side

   See Fig. 5 & Fig. 6 for details.

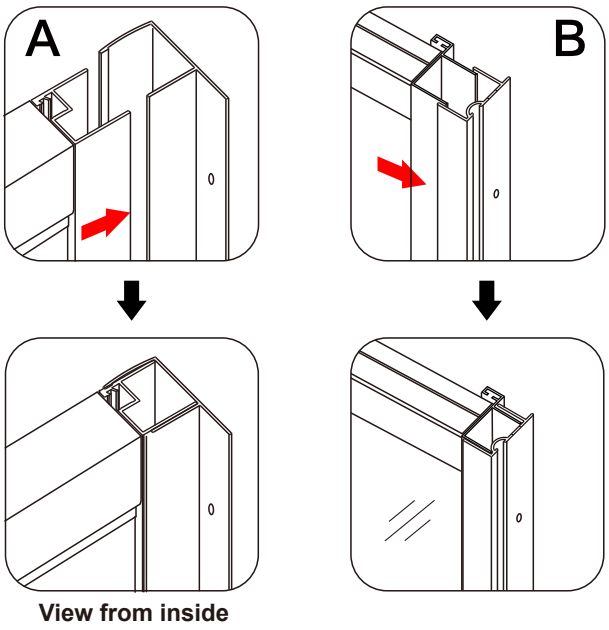

Fig. 5

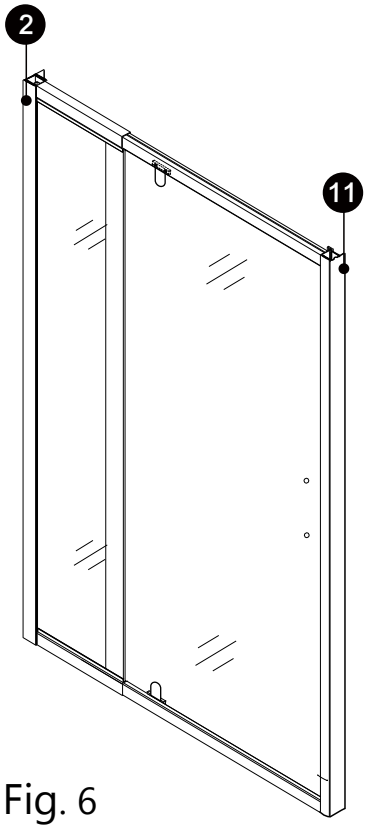

Fig. 6

5. There is adjustment size between **fixed panel(6)** and door assembly, the width can be telescopic based on the exact request.

   NOTICE:
   The adjustable width range is from minimum **32''(813mm)** to maximum **36"(914mm)** the adjustable width range is from minimum **28''(711mm)** to maximum **32"(813mm)**

   See Fig. 7 for details.

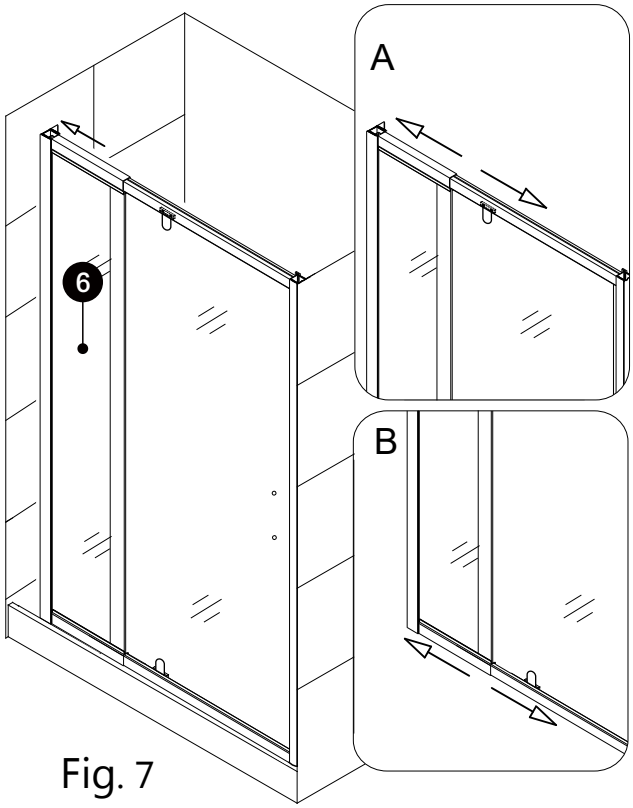

Fig. 7

6. A. Once the overall opening width and unit level have been verified, fasten **Wall Jamb-A (2)** to the wall.
   B. Place the **wall jamb(2)** into the correct position and mark the position of punch, using 6mm drill to punch.
   C. Using the **wall plugs (1)** and **screws ST4x35(3)** to secure them to the wall.

   See Fig. 8 & Fig. 9 for details.

NOTE: If the finished opening width is at the minimum for the model size, attach one wall profile to the wall, set the door assembly back into position on the threshold into the installed wall profile and then attach the remaining wall profile to the wall.

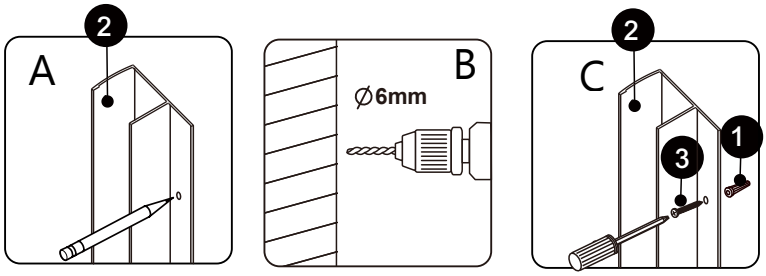

Fig. 8

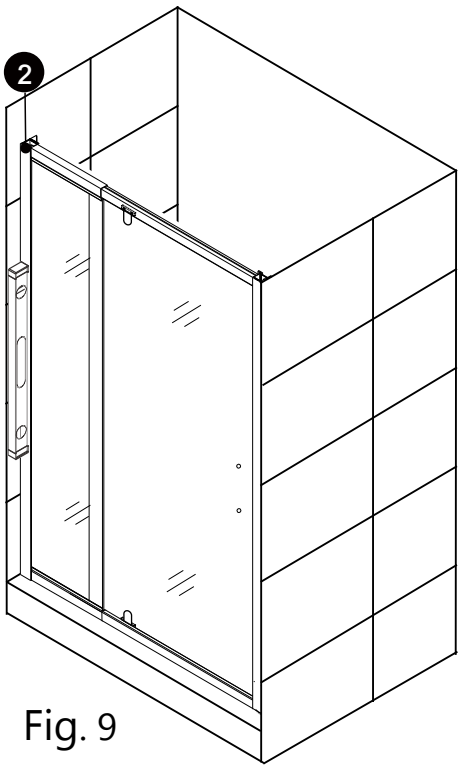

Fig. 9

7. Drill holes through **Wall Jamb-A (2)** and **Wall Jamb-B (11)** using a Ø 1/8" drill bit. Fasten **fixed panel (6)** to **Wall Jamb-A (2)**, and door-assembly **Aluminum-B (15)** to **Wall Jamb-B (11)** using **ST4×10 screws (4)**. Fit **screw caps (5)** over all exposed screw heads.

ATTENTION:
Do not drill fully through the expanding rail; drill only through the outer first material layer.
See Fig.10 for details.

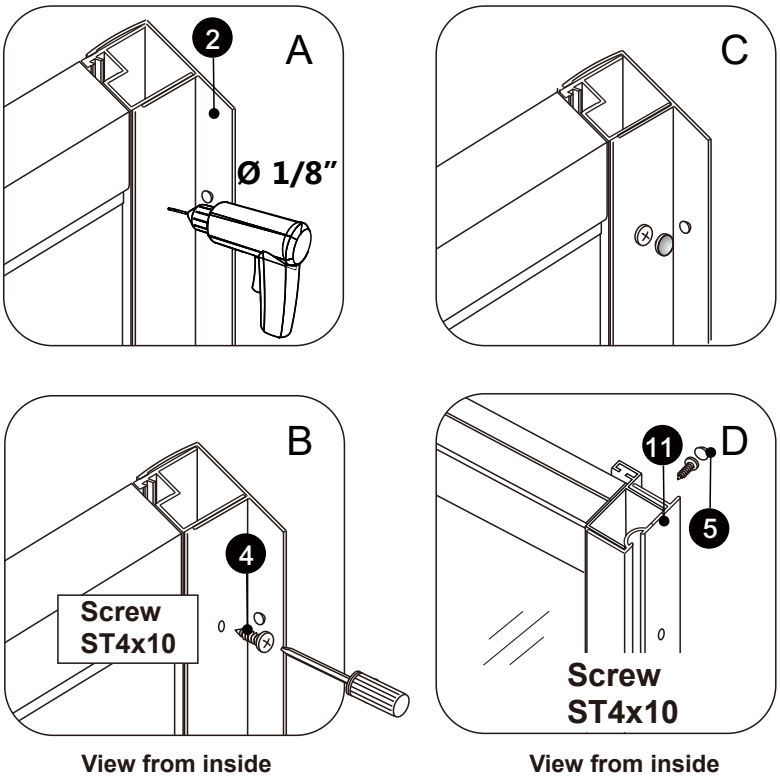

Fig. 10

8. Install the **Handle (8)** onto the **Door assembly.**

See Fig. 11 for details.

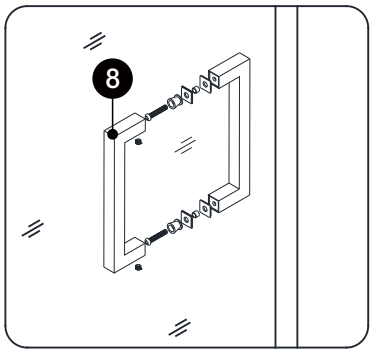

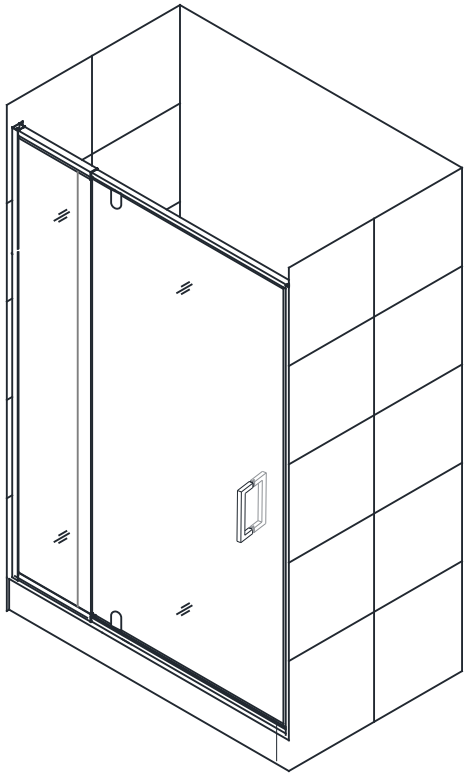

Fig. 11

9. Drill holes through the top and bottom aluminum extrusions with a Ø 1/8" drill bit. Secure the door assembly to the fixed panel using **ST4×10 screws (4)**. Install **screw caps (5)** to conceal screw heads.

ATTENTION:
Do not drill fully through the expanding rail; drill only through the outer first material layer.
See Fig. 12 for details.

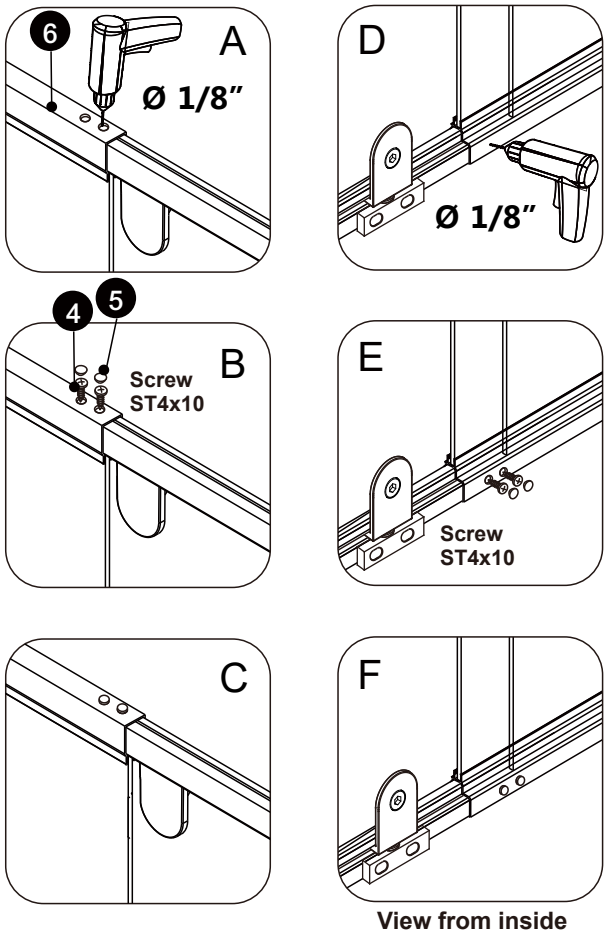

Fig. 12

10. After installing rubber seals, fit the pivot screw covers into place.

See Fig. 13 for details.

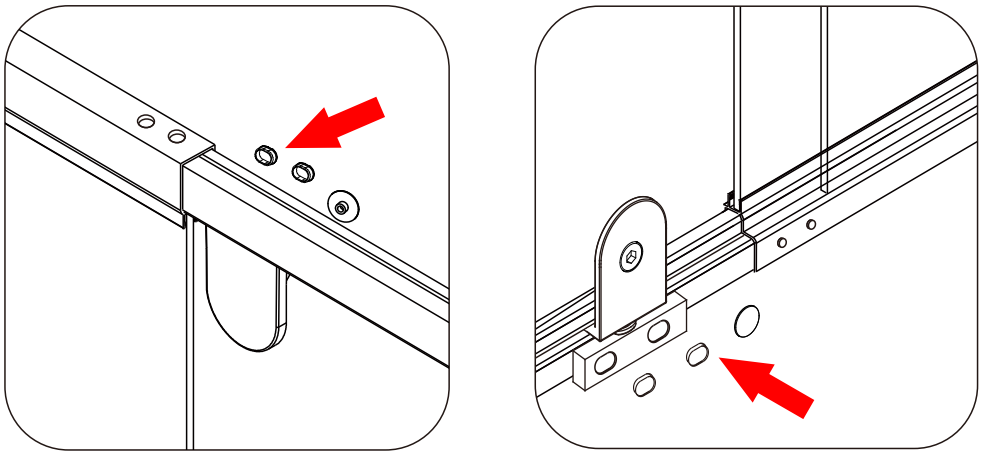

Fig. 13

11. Apply a good quality, mildew-resistant silicone along the wall profiles and the bottom expanding rail where they meet the walls and threshold from both inside and outside the shower.
    Allow 24 hours for the silicone to fully cure before first use.

    See Fig. 14 for details.

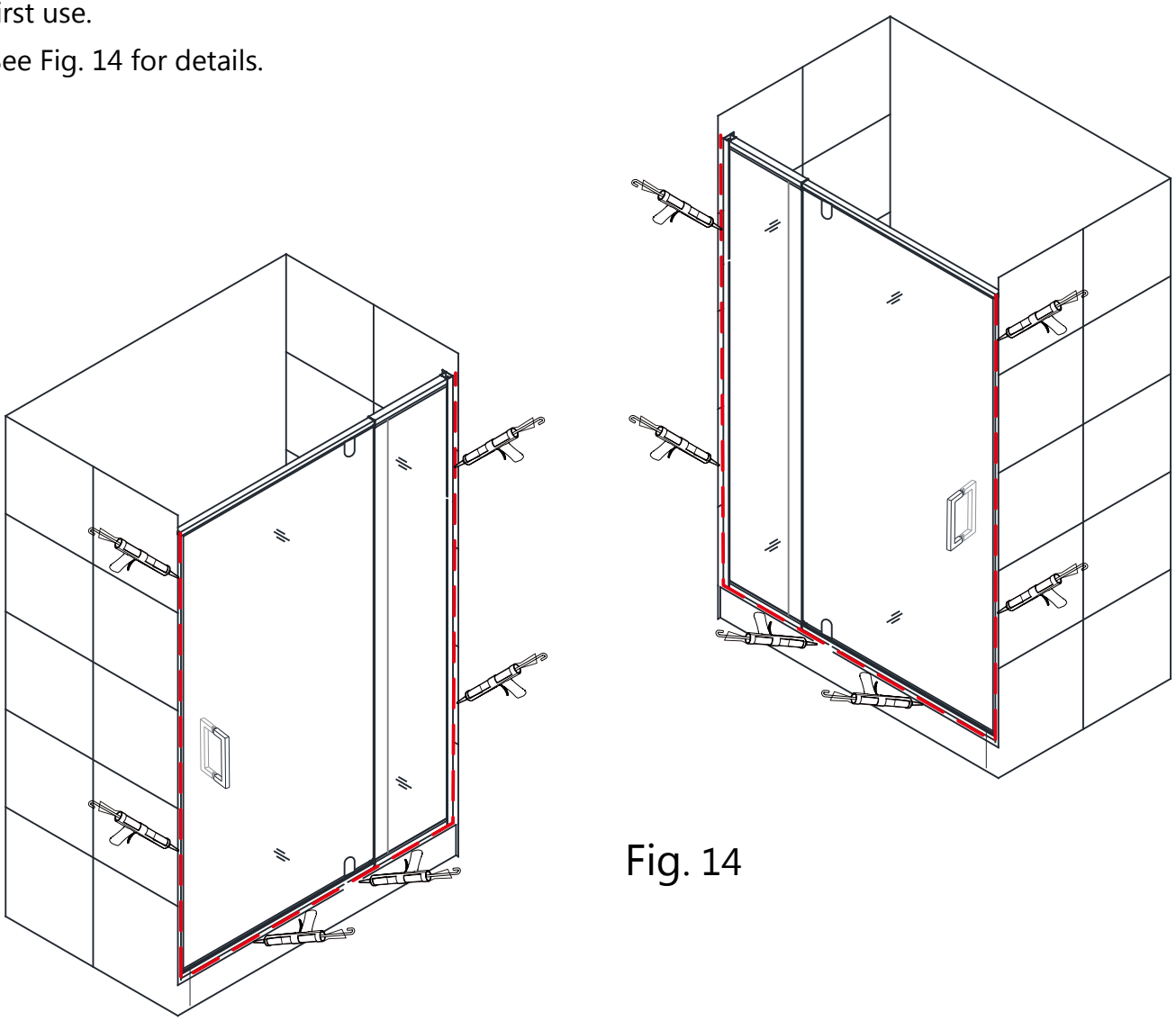

Fig. 14

- **Reversible for left or right door opening installation**

◆Product Maintenance

BASES and BACKWALLS: To ensure long lasting life for your acrylic back walls: wipe them off after each use with a soft cloth. To clean the acrylic back walls use non-abrasive sprays or cream based cleaners. Avoid the use of aerosol spray cleaners. Never use abrasive cleansers, metal brushes or scrapers that could scratch or dull the surface.

GLASS: To ensure long lasting life for your glass shower products: wipe them off after each use with a soft cloth. Rinse and wipe off the glass using either a soft cloth or a squeegee to prevent soap buildup and water spots (Hard water can etch the surface of the glass over time if left to dry). To prevent scratching the surface: never use abrasive cleaners or cleaning products that contain scouring agents. Never use bristle brushes or abrasive sponges that may scratch the surface.

HARDWARE: To ensure a long lasting finish: wipe off the metal parts after each use with a soft cloth. Do not use abrasive cleaners or cleaning products containing ammonia, bleach or acid. If accidentally used, rinse the surface as soon as possible to prevent damage to the finish (peeling or corrosion). After cleaning the polished finishes, rinse thoroughly and wipe dry with soft cloth. Clean stainless steel surfaces at least once a week. When applying stainless steel cleaner or polish to stainless steel hardware, work with (not across) the grain. Never use an abrasive sponge or cloth, steel wool or wired brush as these may permanently scratch the surfaces.

NOTE: To maximize the life of your door, it is important to regularly inspect the glass and other hardware for misalignment, proper attachment, and/or damage. Contact us with any questions or concerns.

Please provide the belowing information if you have any qaustions.
1. order number:
2. description of the issue:
3. who install it? installer or yourself?
4. some photos or video of the issue:
5. If you need replacement parts, please circle the part you need on the page 2, then send the photo to us.
6. your address and phone number (if you need something re-shiped) :

We will give you a solution as soon as possible.

Customer service:

For more information about our products, please contact us below:

US:+1(832)3768443 **sales@casadekorus.com**

Do not return product to the store. Contact us directly with any questions.