# Assembly Instructions

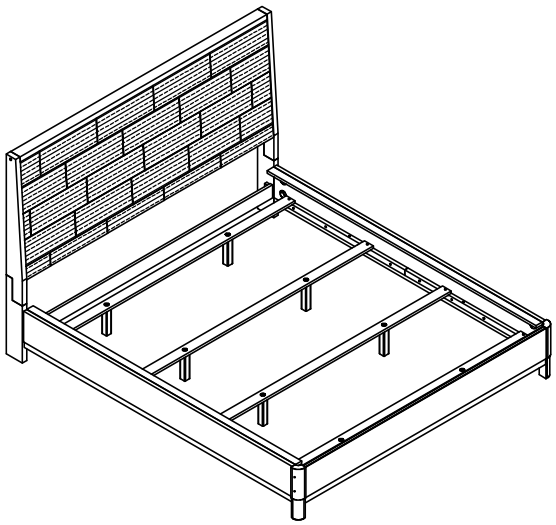

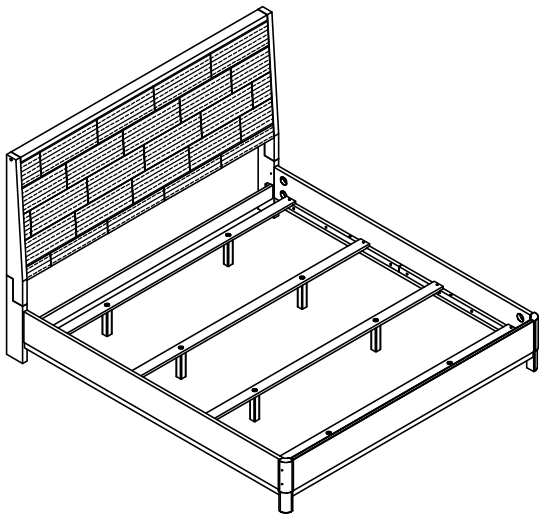

BETWEEN BED SET CAL KING AND EAST KING DIFFERENTLY ON THE RAILS ONLY

## ASSEMBLY RATING

The Assembly Rating is a 5-point system that shows the degree of effort needed in assembling a specific product (with 1 being easy and 5 being difficult). For some products, two persons are recommended.

EASY DIFFICULT

Tools Required For Assembly:

Allen Wrench 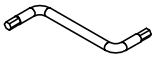 (Included)

Wrench (Included)

Phillips Screwdriver (Not Included)

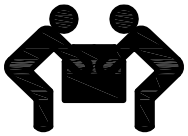

2 PERSONS RECOMMENDED

# ASSEMBLY & CARE ADVICE

FOR YOUR FURNITURE TO LAST,CORRECT ASSEMBLY AND PROPER MAINTENANCE ARE NECESSARY.
PLEASE FOLLOW THE INFORMATION PROVIDED BELOW TO FULLY ENJOY YOUR FURNITURE.

## BASIC ASSEMBLY TECHNIQUES

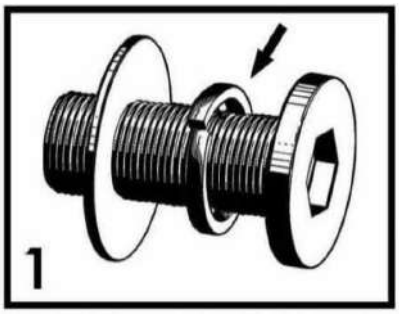


When lock or spring washer is used in an assembly, please make sure the lock or spring washer is placed between the larger flat washer and the head of the screw or bolt.

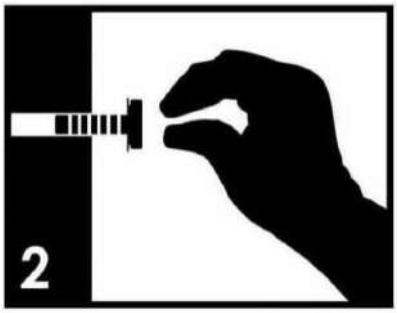


Position each part correctly and insert screws or bolts into their respective holes by hand tighten or using the proper hand tool. Only tighten when step is completed or when instructed to do so.

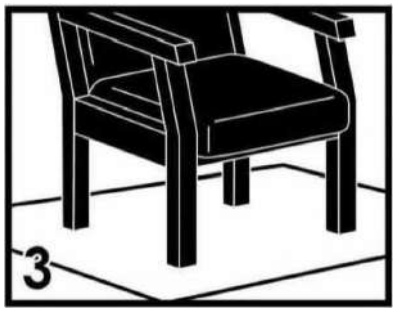


Use cardboard or carpet area when assembling furniture to prevent scratches . Make sure the furniture rests on a flat and level surface with each leg evenly touching the floor.
No dragging of products/parts.

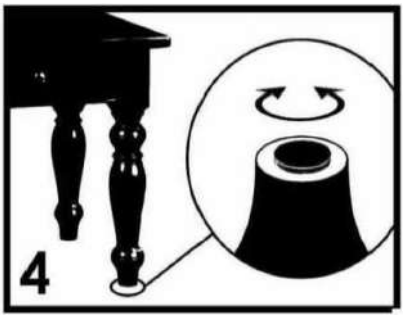


Some furniture comes with height adjusetment knobs underneath each leg. To lower or to raise each leg, you need to turn clockwise or counterclockwise, respectively.

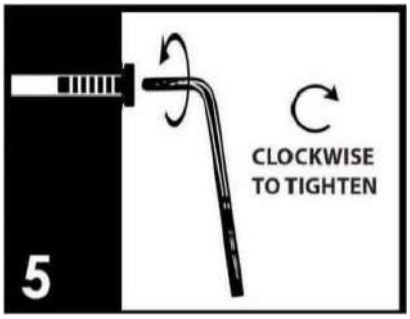


Make sure all parts are properly aligned, then use the appropriate hand tool to completely tighten the bolts or screws. Do not use power tools and do not overtighten.

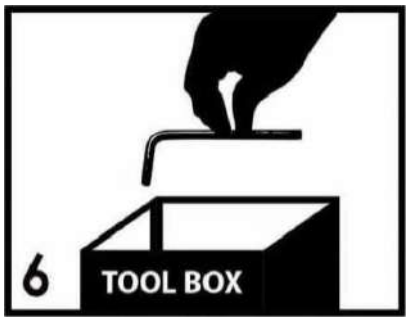


Save the instructions and store the Allen wrench or any supplied tool for later maintenance. After two weeks, check and tighten any loose hardware and repeat again every six months thereafter.

IT IS THE USER'S RESPONSIBILITY TO MAINTAIN THE FURNITURE.THE HARDWARE MAY LOOSEN OVER TIME AND MAY CAUSE THE FURNITURE TO BE WOBBLY AND UNABLE TO SUPPORT ITS INTENDED WEIGHT CAPACITY. THIS MAY LEAD TO COLLAPSE AND MAY CAUSE SERIOUS INJURY.

FAILURE TO FOLLOW THE GUIDELINES ABOVE MAY RESULT IN INJURY AND/OR PROPERTY DAMAGE.

ALL RIGHTS RESERVED.

Before you begin, please read Page 2 of "Assembly and Care Advice".

And remember, do not tighten until each step is completed or instructed.

## Parts List

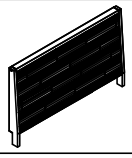
#1 x 1 pc
Headboard

#2R x 1 pc
Right H/Board Leg

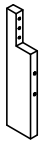
#2L x 1 pc
Left H/Board Leg

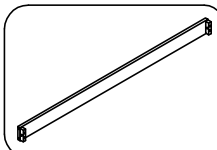
#3 x 1 pc
Leg Support

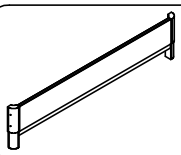
#4 x 1 pc
Footboard

#5 x 2 pcs
Side Rail

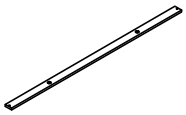
#6 x 4 pcs
Slat

#7 x 8 pcs
Slat Support Leg 40x40x180mm

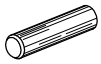
#K x 4 pcs
Dowel

## Hardware List

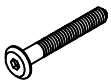
#A x 2 pcs
Bolt 1/4" x 1-3/4"

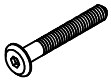
#B x 6 pcs
Bolt 1/4" x 2.4"

#C x 8 pcs
Lock Washer

#D x 8 pcs
Flat Washer

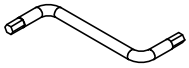
#E x 1 pc
Allen Wrench

#F x 8 pcs
Threaded Stud

#G x 8 pcs
Hex Nut

#H x 8 pcs
Beveled Washer

#I x 1 pc
Wrench

#J x 8 pcs
Screw 1-1/4"

Before you begin, please read Page 2 of "Assembly and Care Advice".

And remember, do not tighten until each step is completed or instructed.

## Parts List

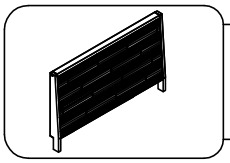

#1 x 1 pc
Headboard

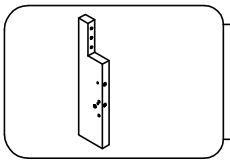

#2R x 1 pc
Right H/Board Leg

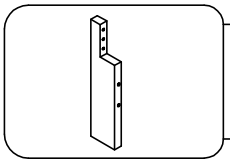

#2L x 1 pc
Left H/Board Leg

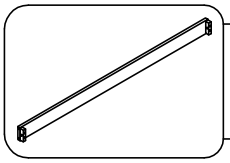

#3 x 1 pc
Leg Support

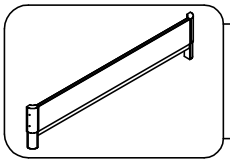

#4 x 1 pc
Footboard

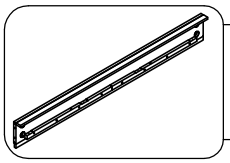

#5 x 2 pcs
Side Rail

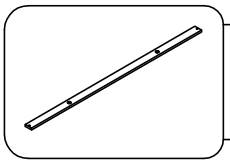

#6 x 4 pcs
Slat

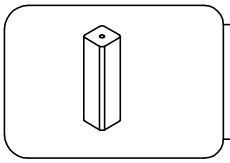

#7 x 8 pcs
Slat Support Leg 40x40x180mm

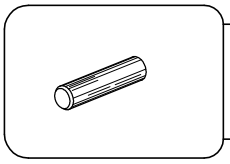

#K x 4 pcs
Dowel

## Hardware List

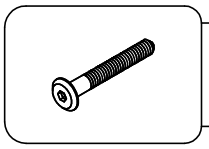

#A x 2 pcs
Bolt 1/4" x 1-3/4"

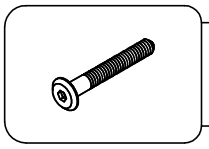

#B x 6 pcs
Bolt 1/4" x 2.4"

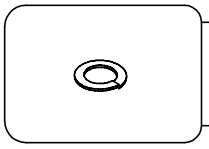

#C x 8 pcs
Lock Washer

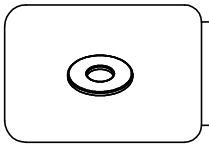

#D x 8 pcs
Flat Washer

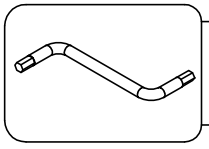

#E x 1 pc
Allen Wrench

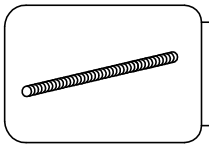

#F x 8 pcs
Threaded Stud

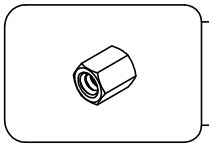

#G x 8 pcs
Hex Nut

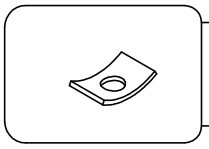

#H x 8 pcs
Beveled Washer

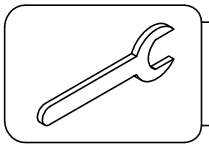

#I x 1 pc
Wrench

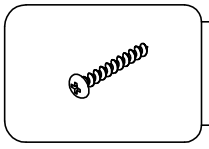

#J x 8 pcs
Screw 1-1/4"

Before you begin, please read Page 2 of "Assembly and Care Advice".

And remember, do not tighten until each step is completed or instructed.

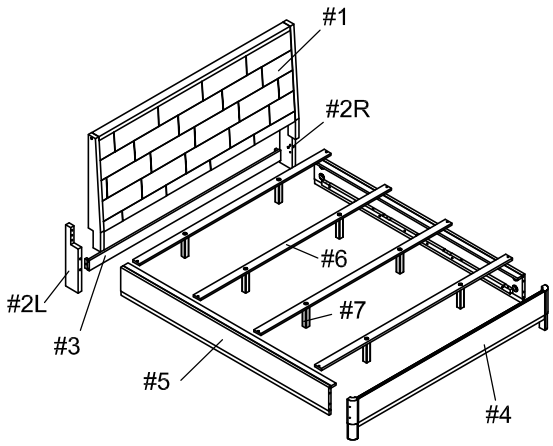


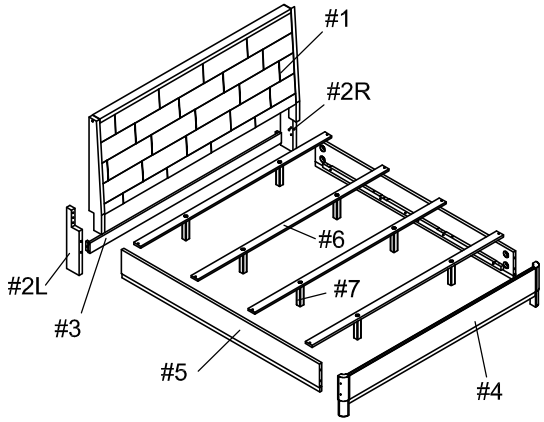

Note : Left and right is determined by facing the front of the headboard in its upright position.

#A x 2 pcs
#C x 4 pcs
#D x 4 pcs
#K x 4 pcs

Insert dowels (#K) to the holes of the HB legs (#2R/L). Align the leg support (#3) to the HB legs (#2R/L), then secure by using bolts (#A) with washers (#C,D).

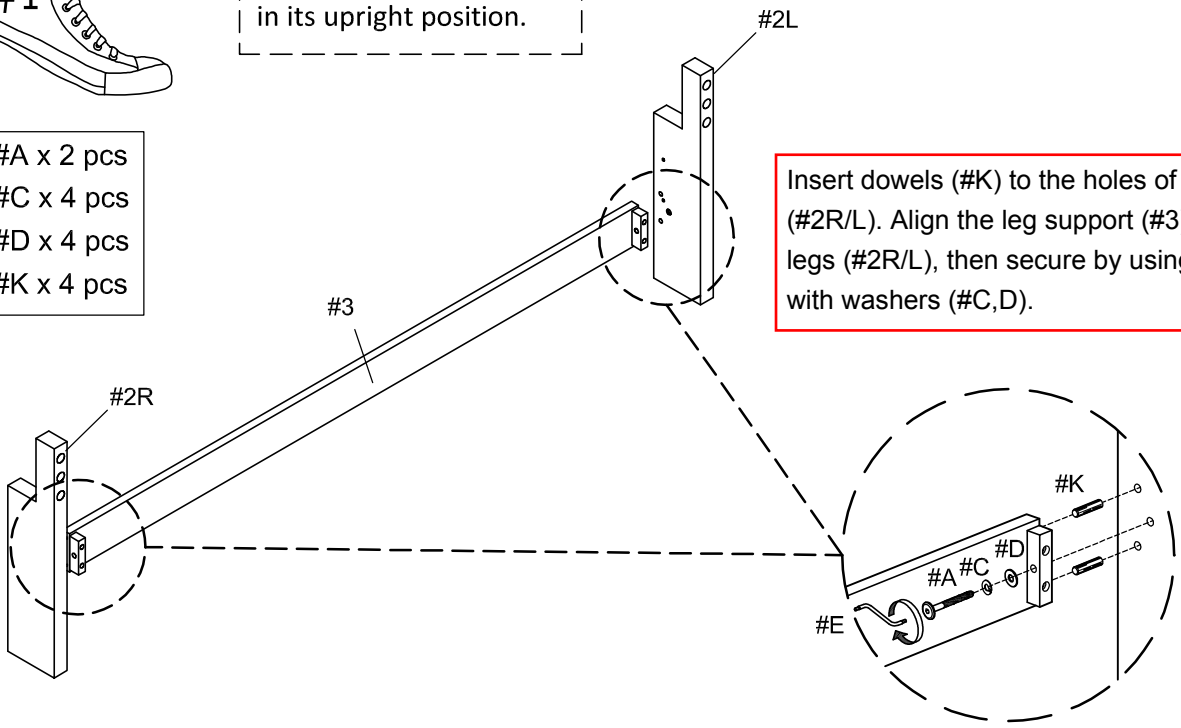

#B x 6 pcs
#C x 6 pcs
#D x 6 pcs

Align HB legs (#2R/L) to the headboard (#1), then secure by using bolts (#B) with washers (#C,D).

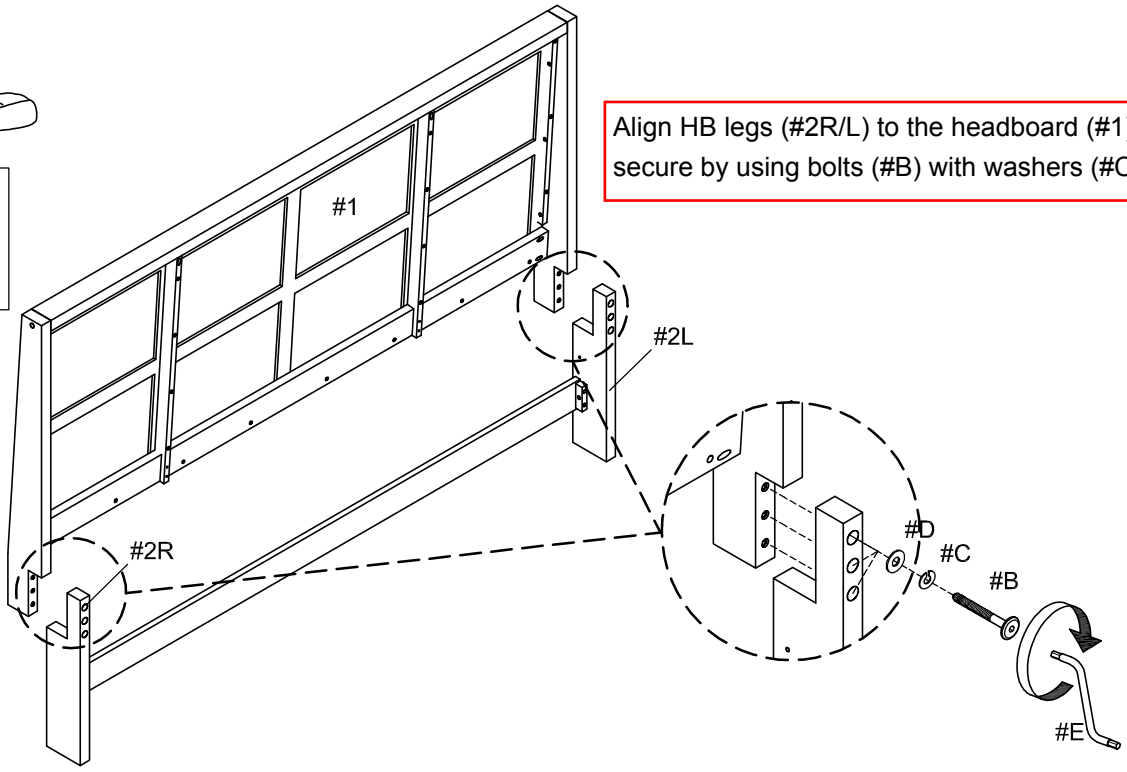

Attach threaded studs (#F) to the holes of the HB legs (#2R,L) and footboard (#4), then align the side rails (#5) to the headboard and footboard. Secure by using hex nuts (#G) with beveled washers (#H).

#F x 8 pcs
#G x 8 pcs
#H x 8 pcs

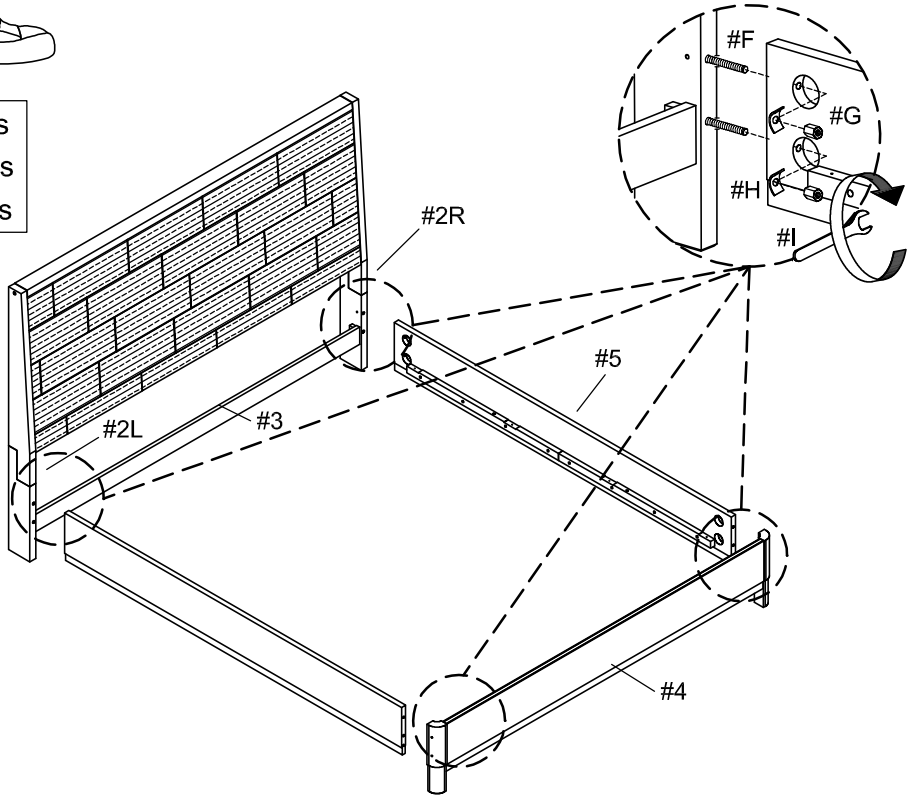

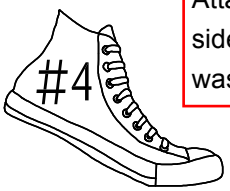


Attach threaded studs (#F) to the holes of the HB legs (#2R,L) and footboard (#4), then align the side rails (#5) to the headboard and footboard. Secure by using hex nuts (#G) with beveled washers (#H).

#F x 8 pcs
#G x 8 pcs
#H x 8 pcs

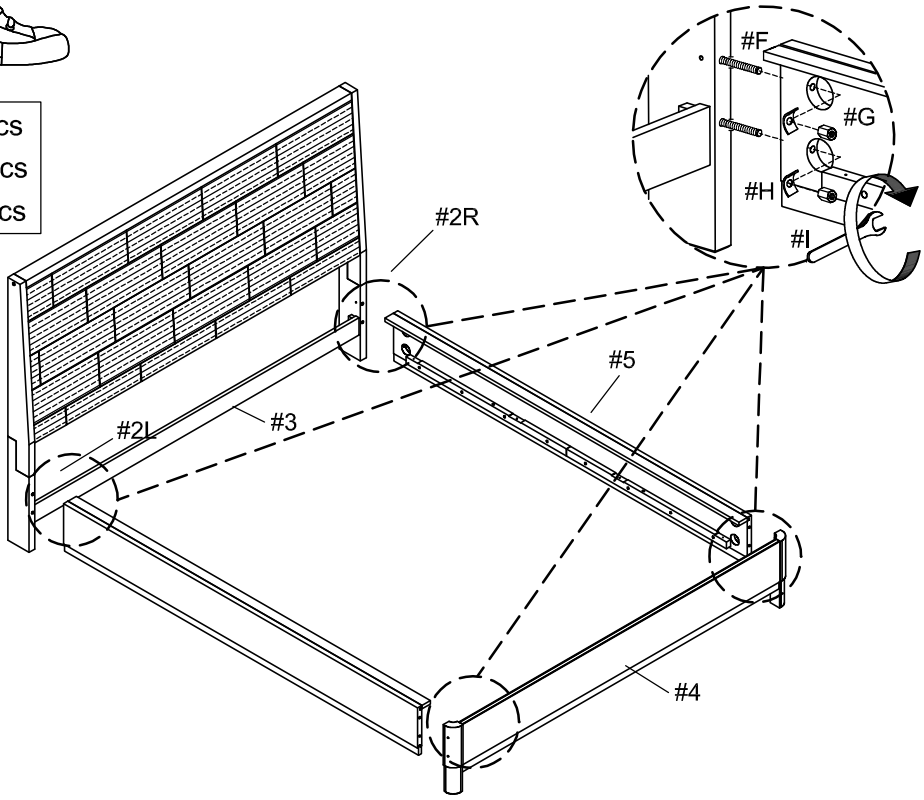

X4

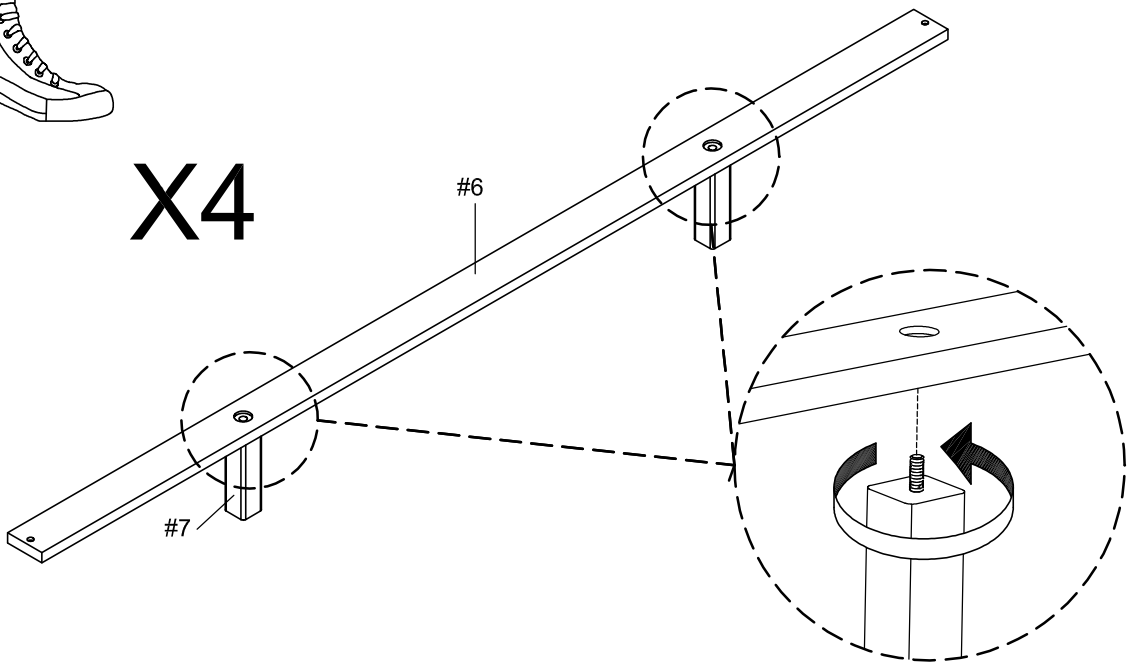


Attach support legs (#7) to the slats (#6).

Align slats (#6) to the side rails, then secure by using screws (#J).

#J x 8 pcs

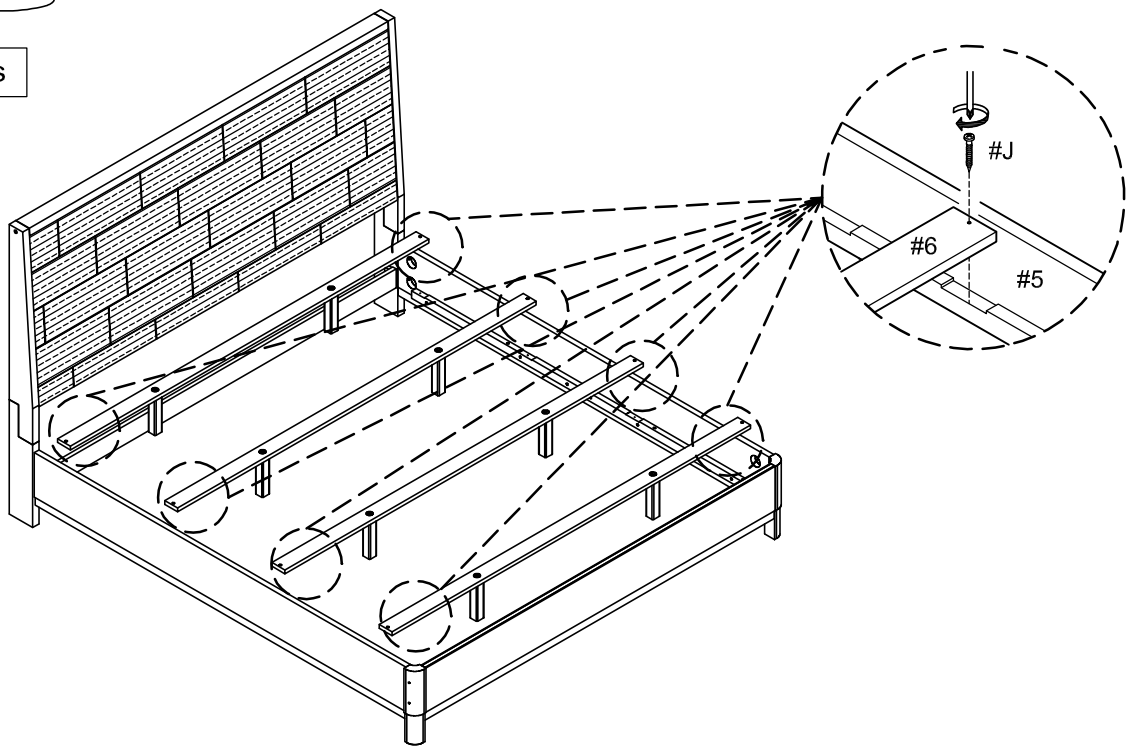

Align slats (#6) to the side rails, then secure by using screws (#J).

#J x 8 pcs

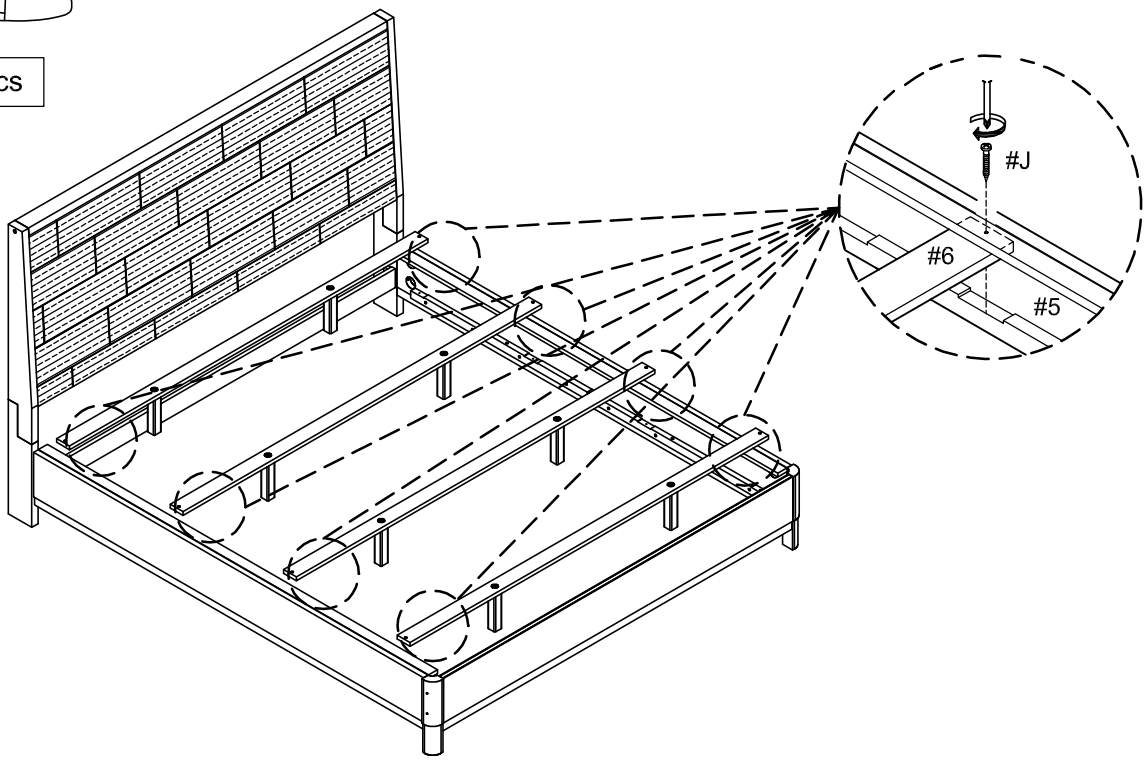

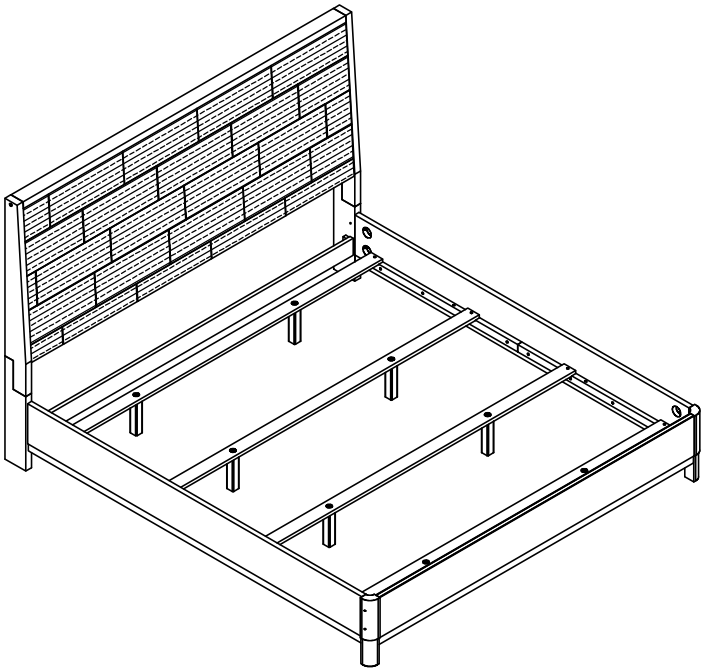

ASSEMBLY IS COMPLETED

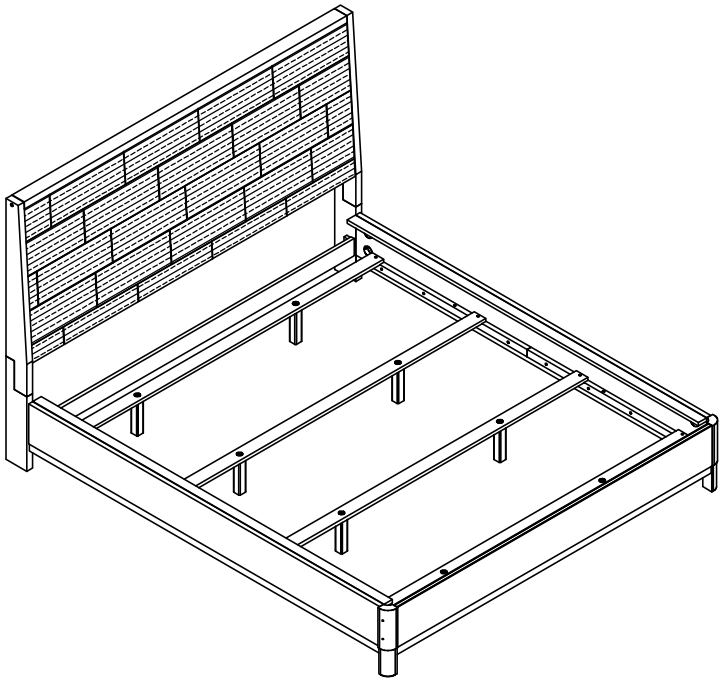

ASSEMBLY IS COMPLETED