30-IN VANITY COMBO SPECIFICATION



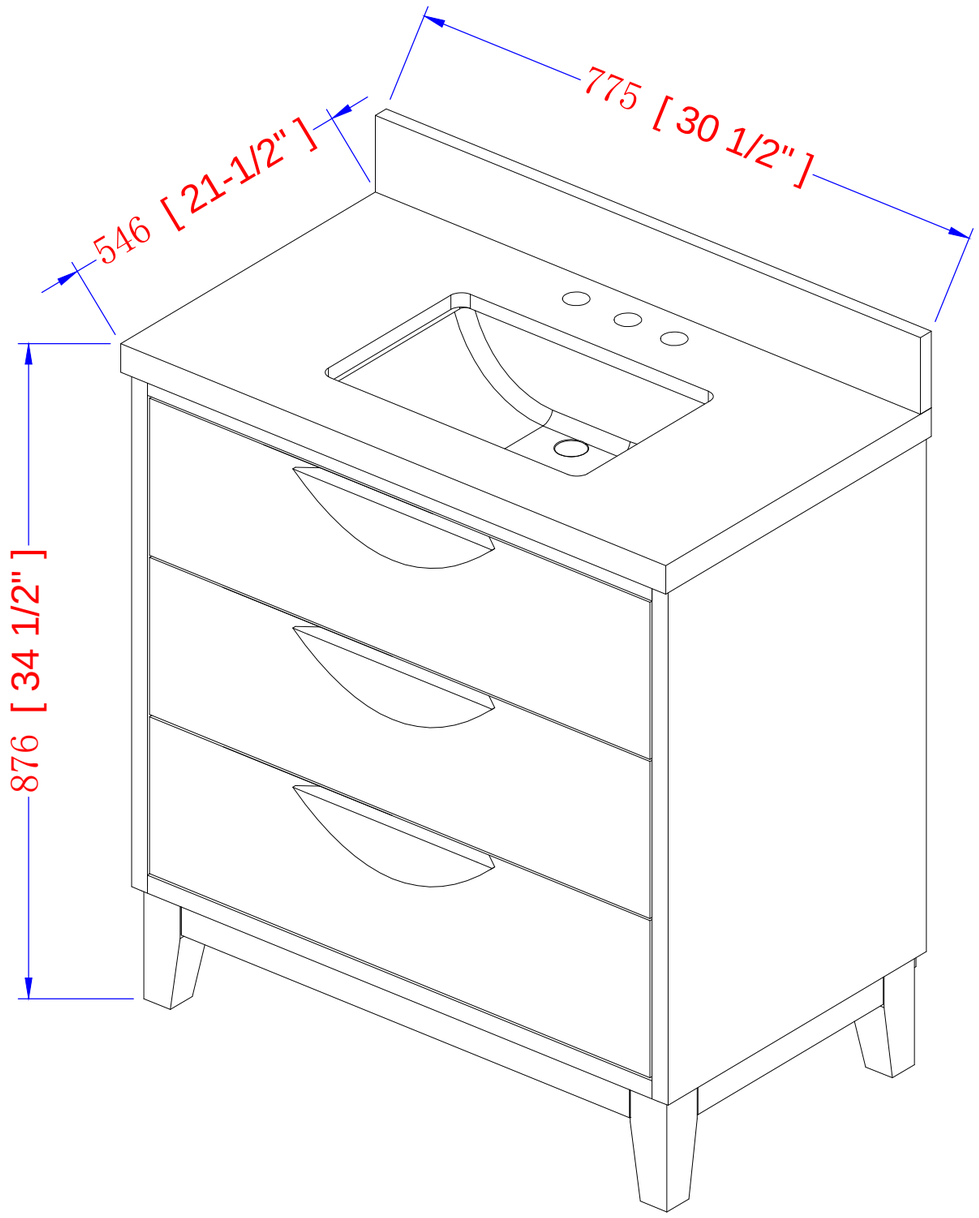
775 [30 1/2"]
546 [21-1/2"]
876 [34 1/2"]

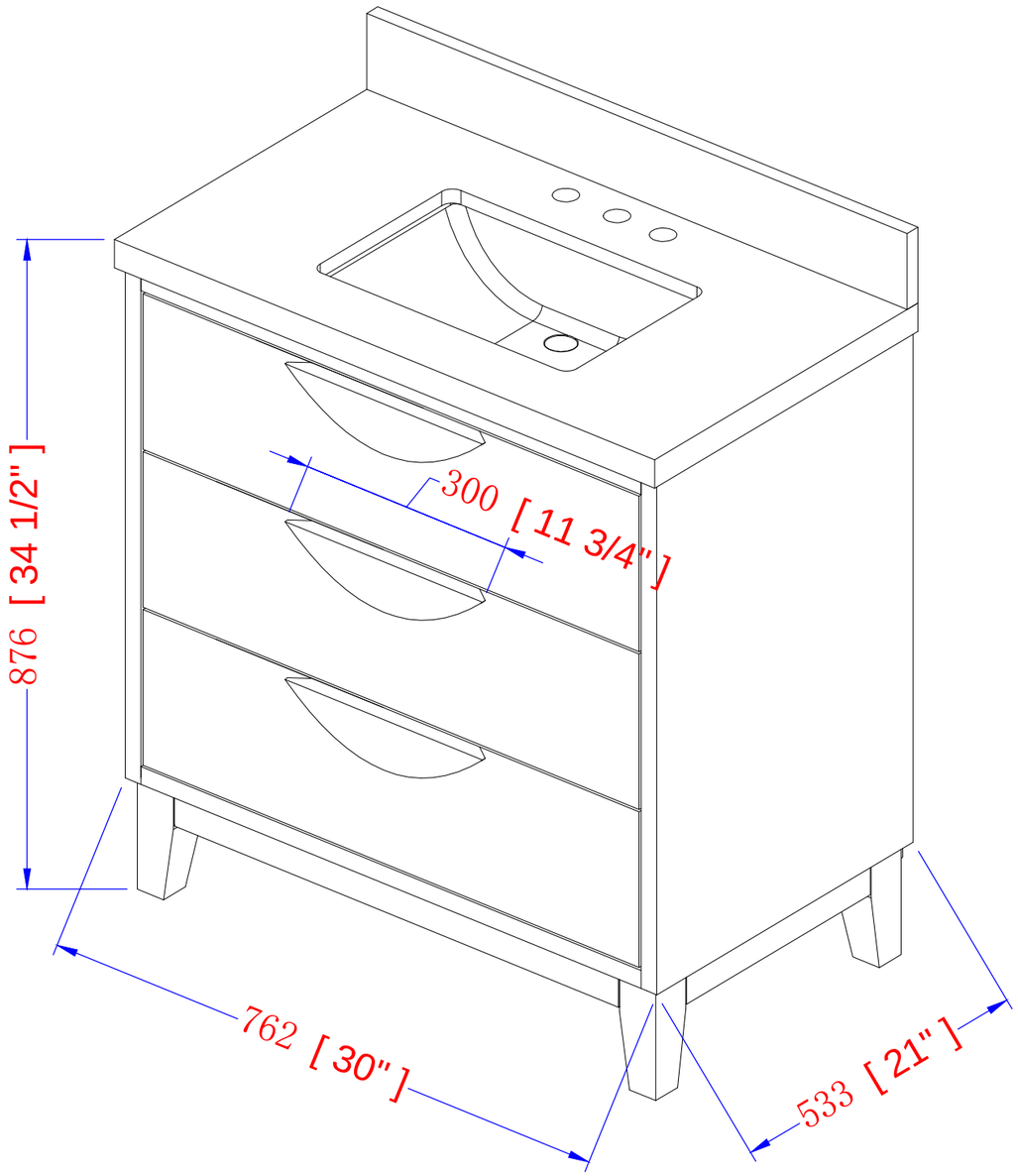
876 [34 1/2"]
300 [11 3/4"]
762 [30"]
533 [21"]

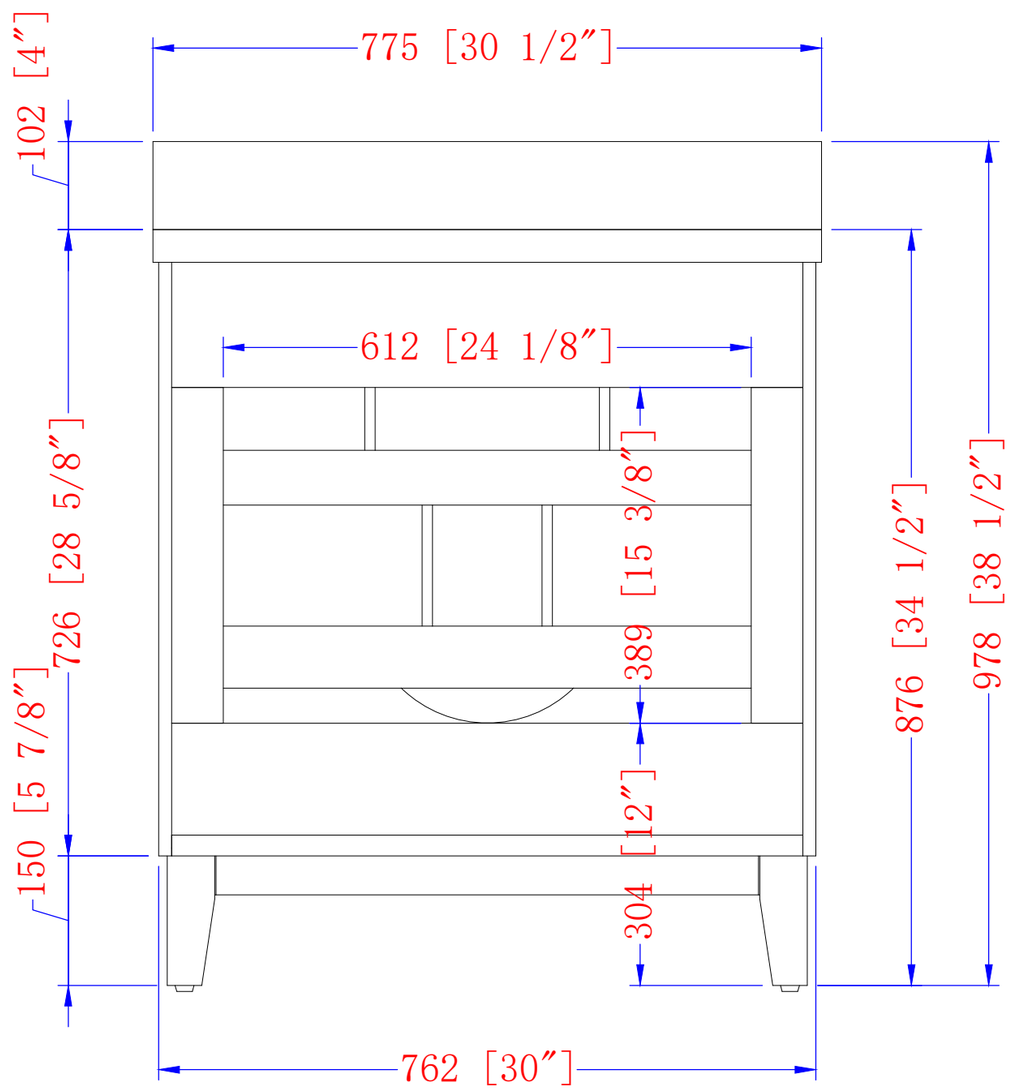
775 [30 1/2"]
102 [4"]
612 [24 1/8"]
726 [28 5/8"]
389 [15 3/8"]
150 [5 7/8"]
304 [12"]
876 [34 1/2"]
978 [38 1/2"]
762 [30"]

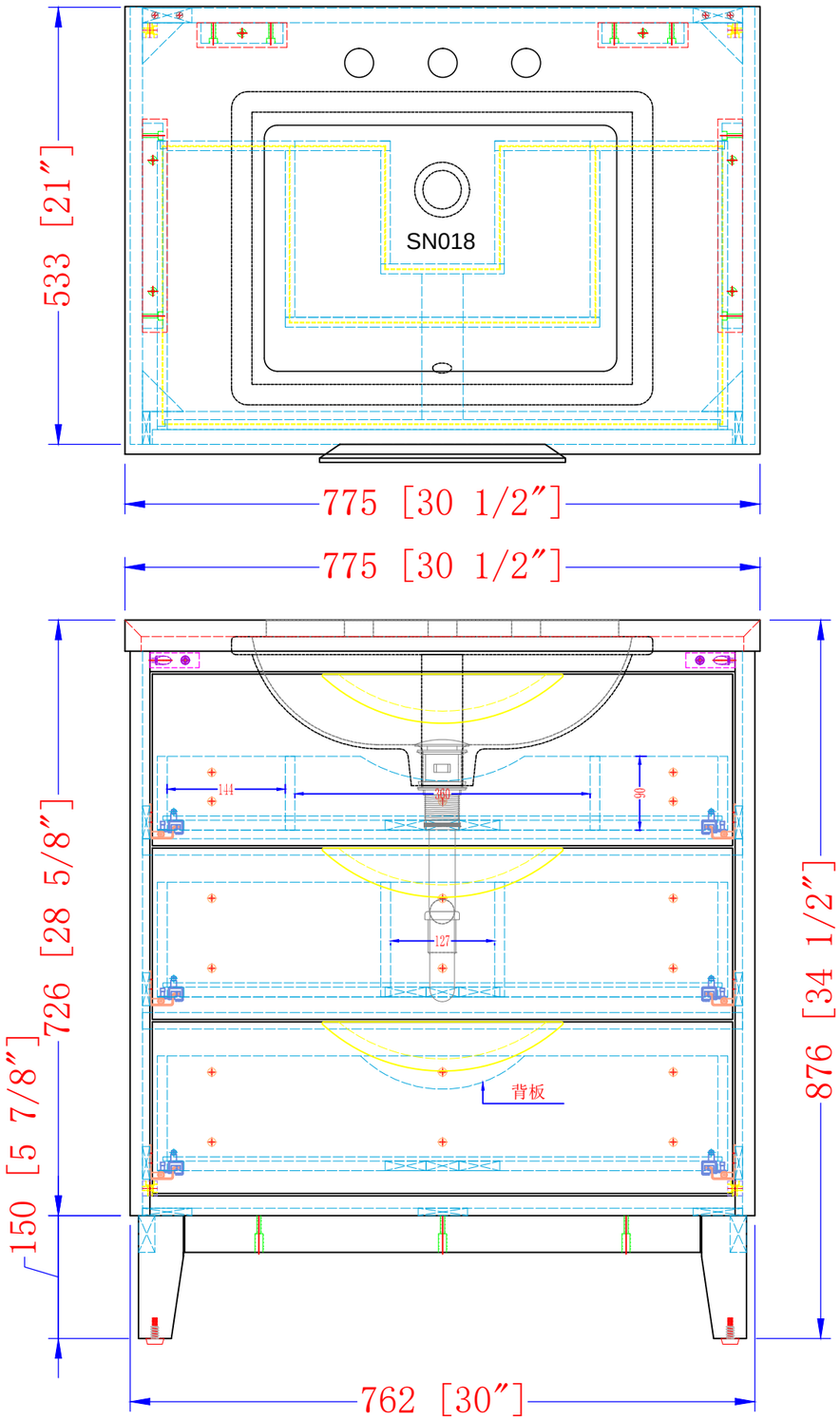
533 [21″]
SN018
775 [30 1/2″]
775 [30 1/2″]
546 [21 1/2″]
726 [28 5/8″]
150 [5 7/8″]
876 [34 1/2″]
144
90
127
背板
389 [15 3/8″]
304 [12″]
762 [30″]
533 [21″]

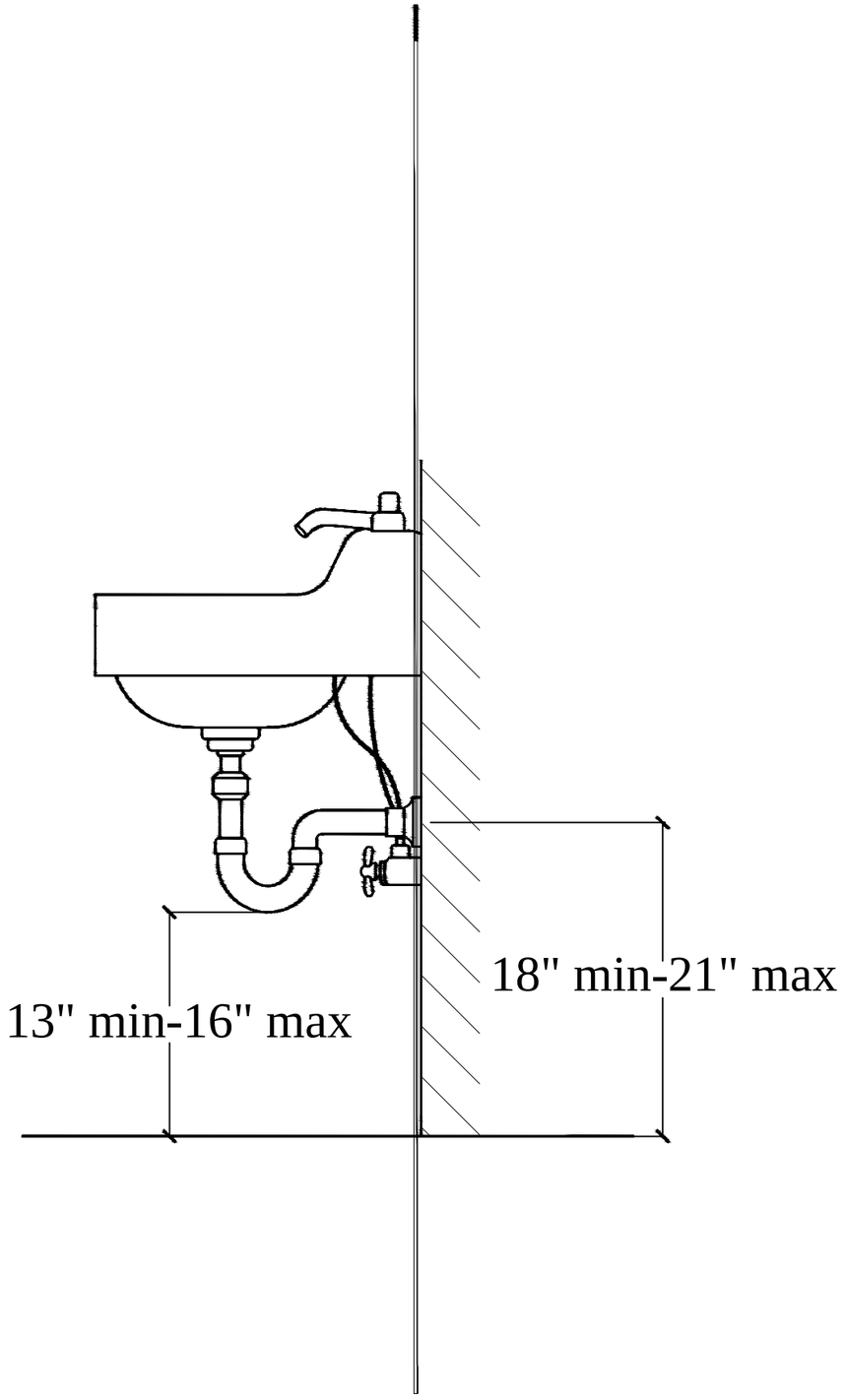
13" min-16" max
18" min-21" max

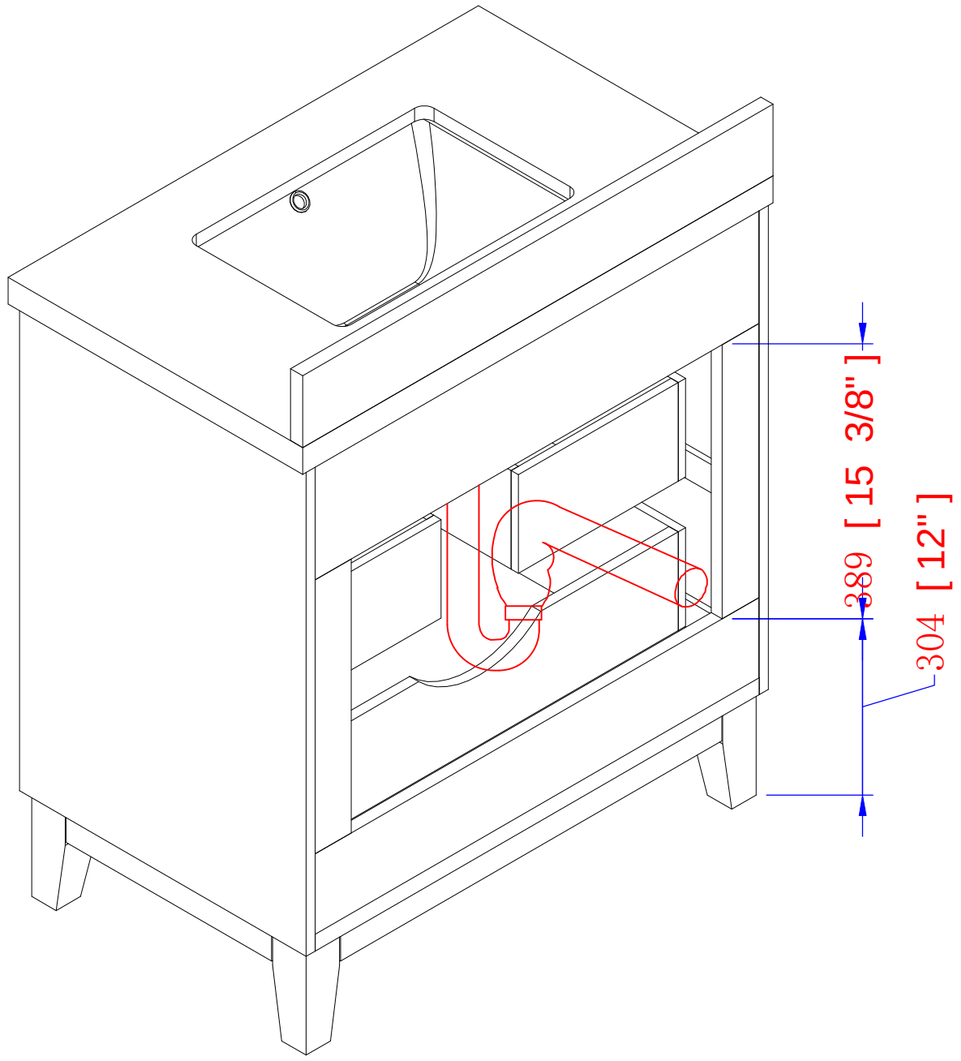
389 [15 3/8"]
304 [12"]