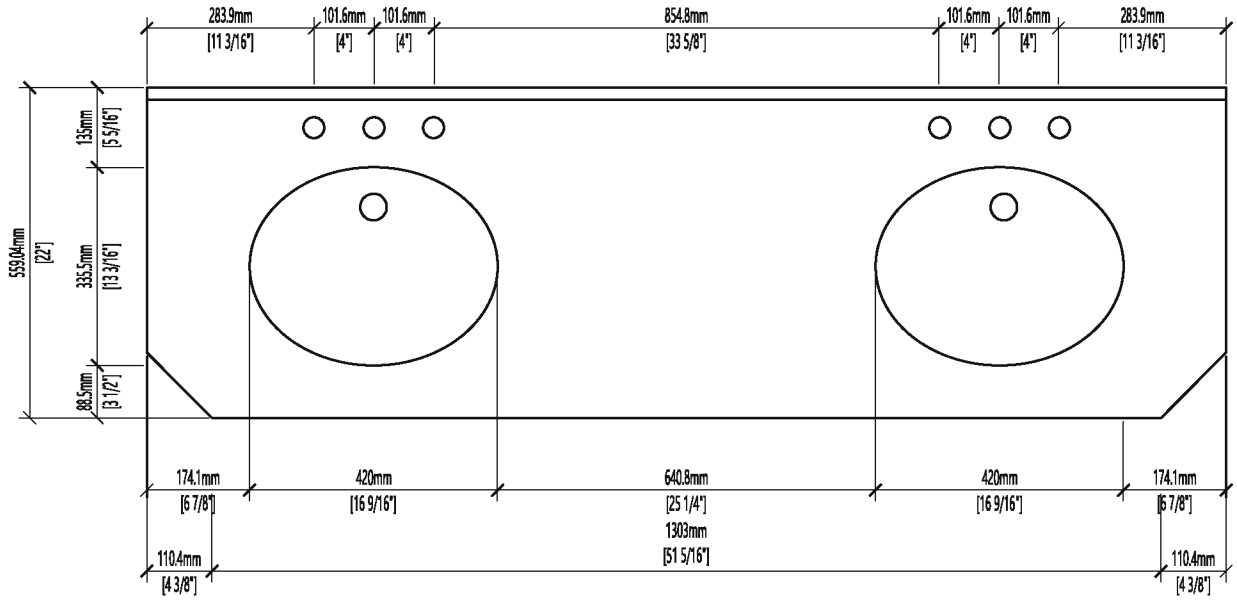
283.9mm
[11 3/16"]
101.6mm
[4"]
101.6mm
[4"]
854.8mm
[33 5/8"]
101.6mm
[4"]
101.6mm
[4"]
283.9mm
[11 3/16"]
135mm
[5 5/16"]
559.04mm
[22"]
335.5mm
[13 3/16"]
88.5mm
[3 1/2"]
174.1mm
[6 7/8"]
420mm
[16 9/16"]
640.8mm
[25 1/4"]
420mm
[16 9/16"]
174.1mm
[6 7/8"]
1303mm
[51 5/16"]
110.4mm
[4 3/8"]
110.4mm
[4 3/8"]

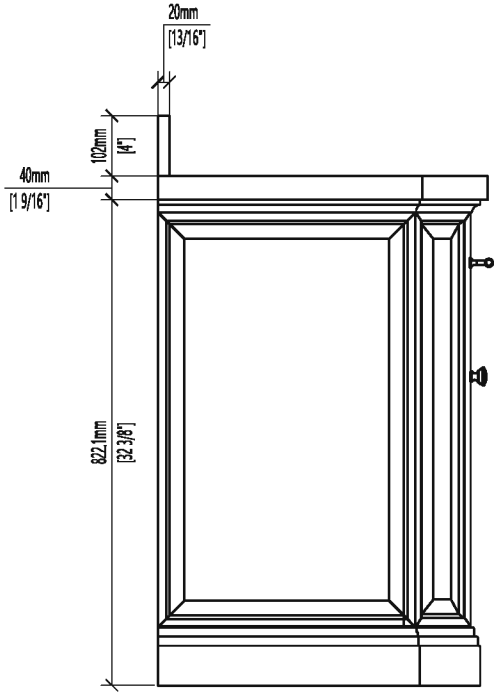
20mm
[13/16"]
102mm
[4"]
40mm
[1 9/16"]
822.1mm
[32 3/8"]

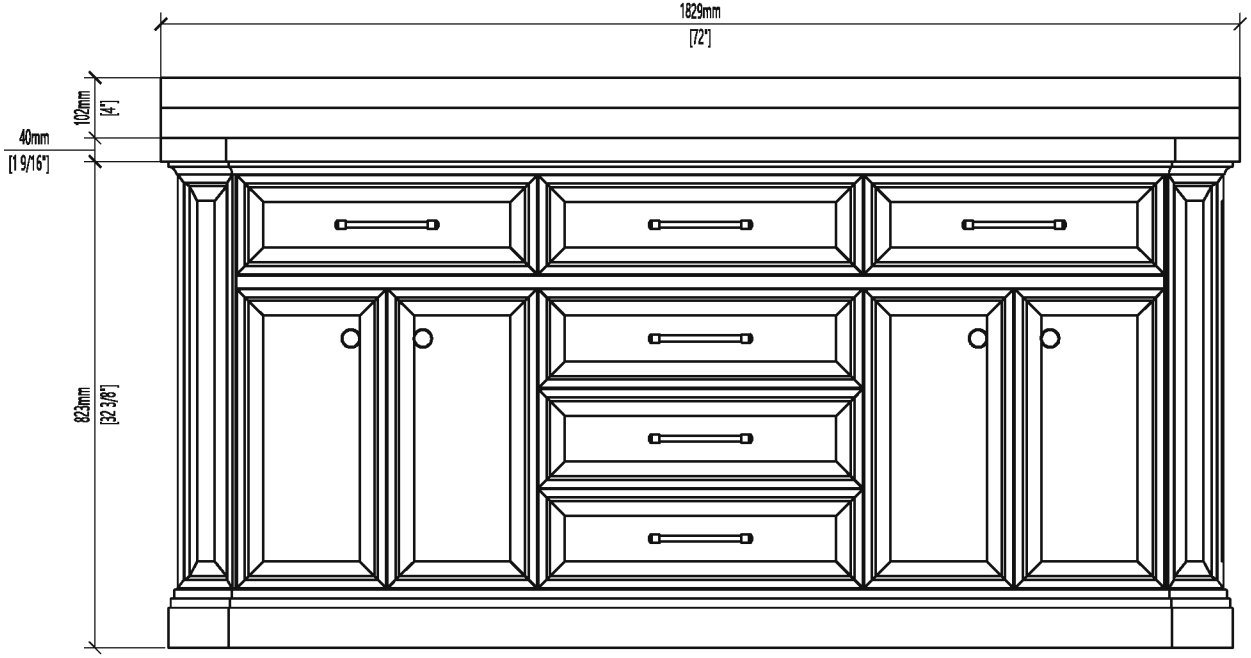
1829mm
[72"]
102mm
[4"]
40mm
[1 9/16"]
823mm
[32 3/8"]

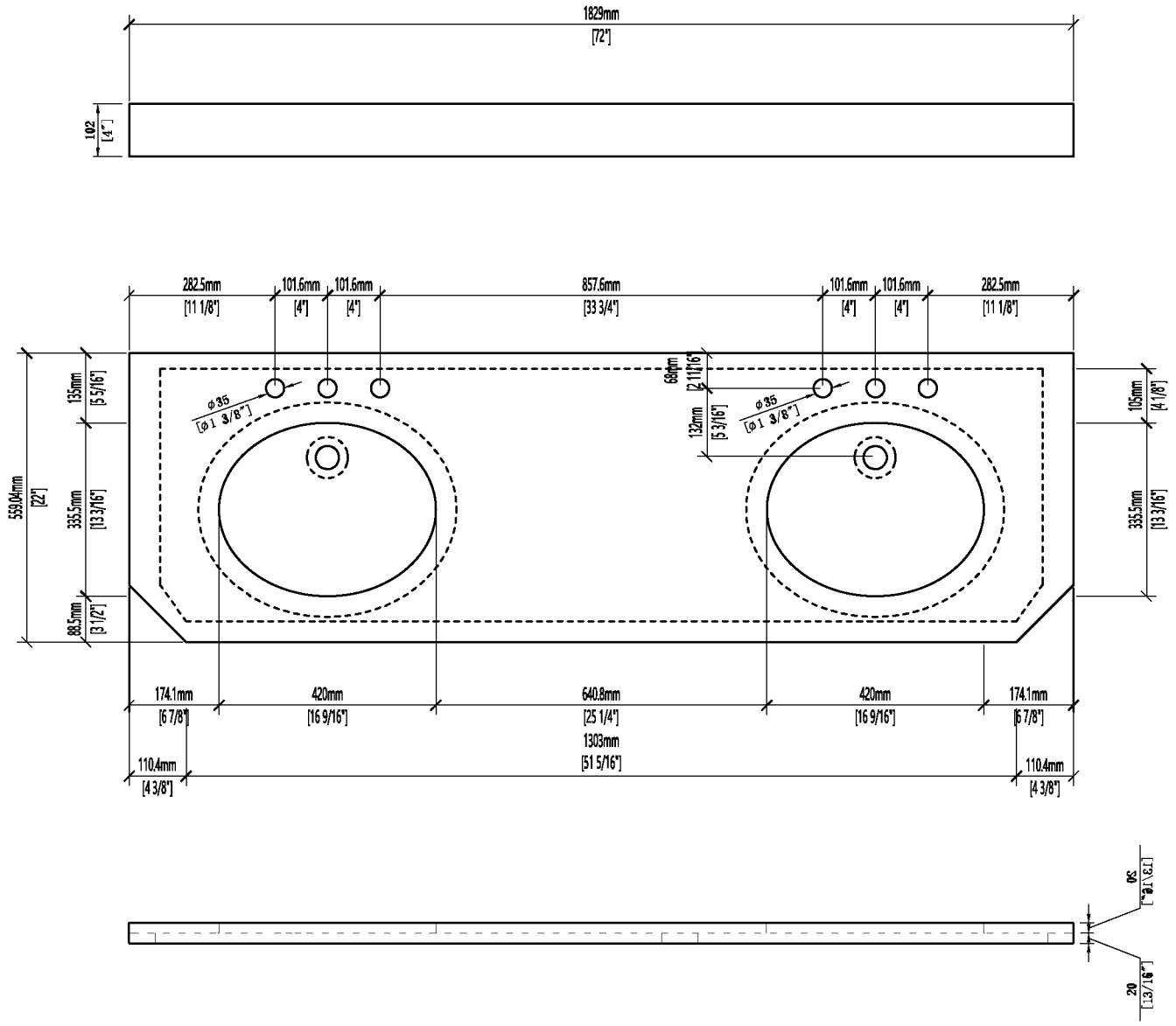
1829mm
[72"]
102
[4"]
282.5mm
[11 1/8"]
101.6mm
[4"]
101.6mm
[4"]
857.6mm
[33 3/4"]
101.6mm
[4"]
101.6mm
[4"]
282.5mm
[11 1/8"]
135mm
[5 5/16"]
559.04mm
[22"]
335.5mm
[13 3/16"]
88.5mm
[3 1/2"]
68mm
[2 11/16"]
132mm
[5 3/16"]
ϕ35
[ϕ1 3/8"]
ϕ35
[ϕ1 3/8"]
105mm
[4 1/8"]
335.5mm
[13 3/16"]
174.1mm
[6 7/8"]
420mm
[16 9/16"]
640.8mm
[25 1/4"]
420mm
[16 9/16"]
174.1mm
[6 7/8"]
1303mm
[51 5/16"]
110.4mm
[4 3/8"]
110.4mm
[4 3/8"]
50
[1 9/16"]
20
[13/16"]

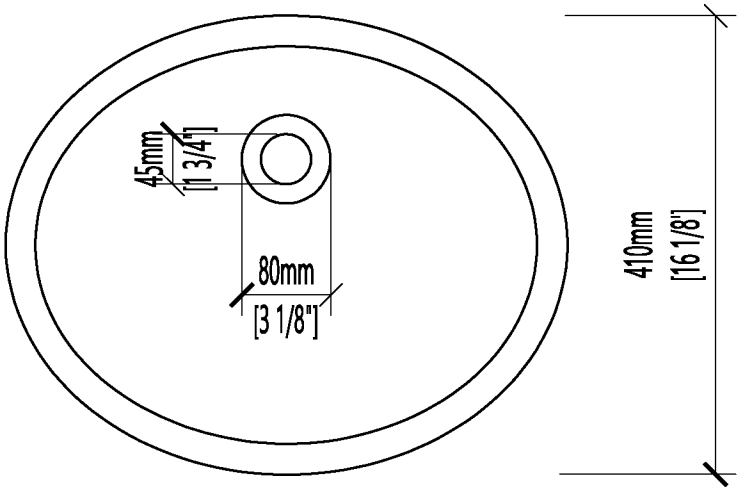
45mm
[1 3/4"]
80mm
[3 1/8"]
410mm
[16 1/8"]

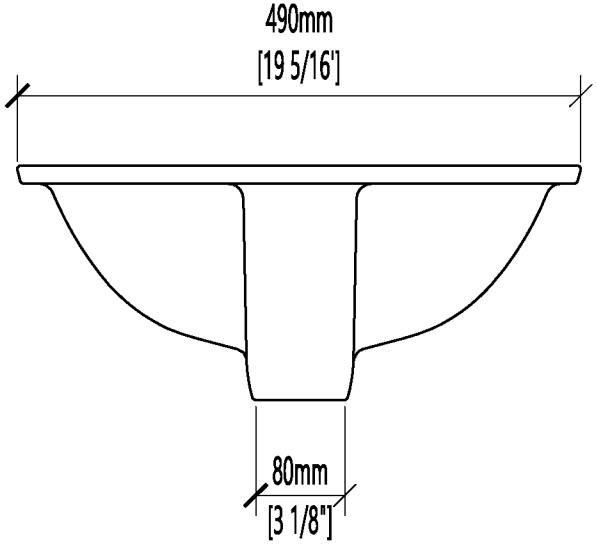
490mm
[19 5/16"]
80mm
[3 1/8"]

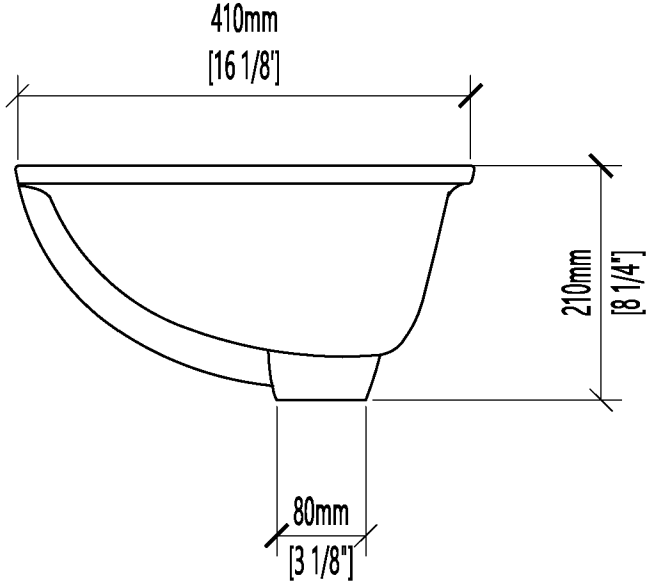
410mm
[16 1/8"]
210mm
[8 1/4"]
80mm
[3 1/8"]

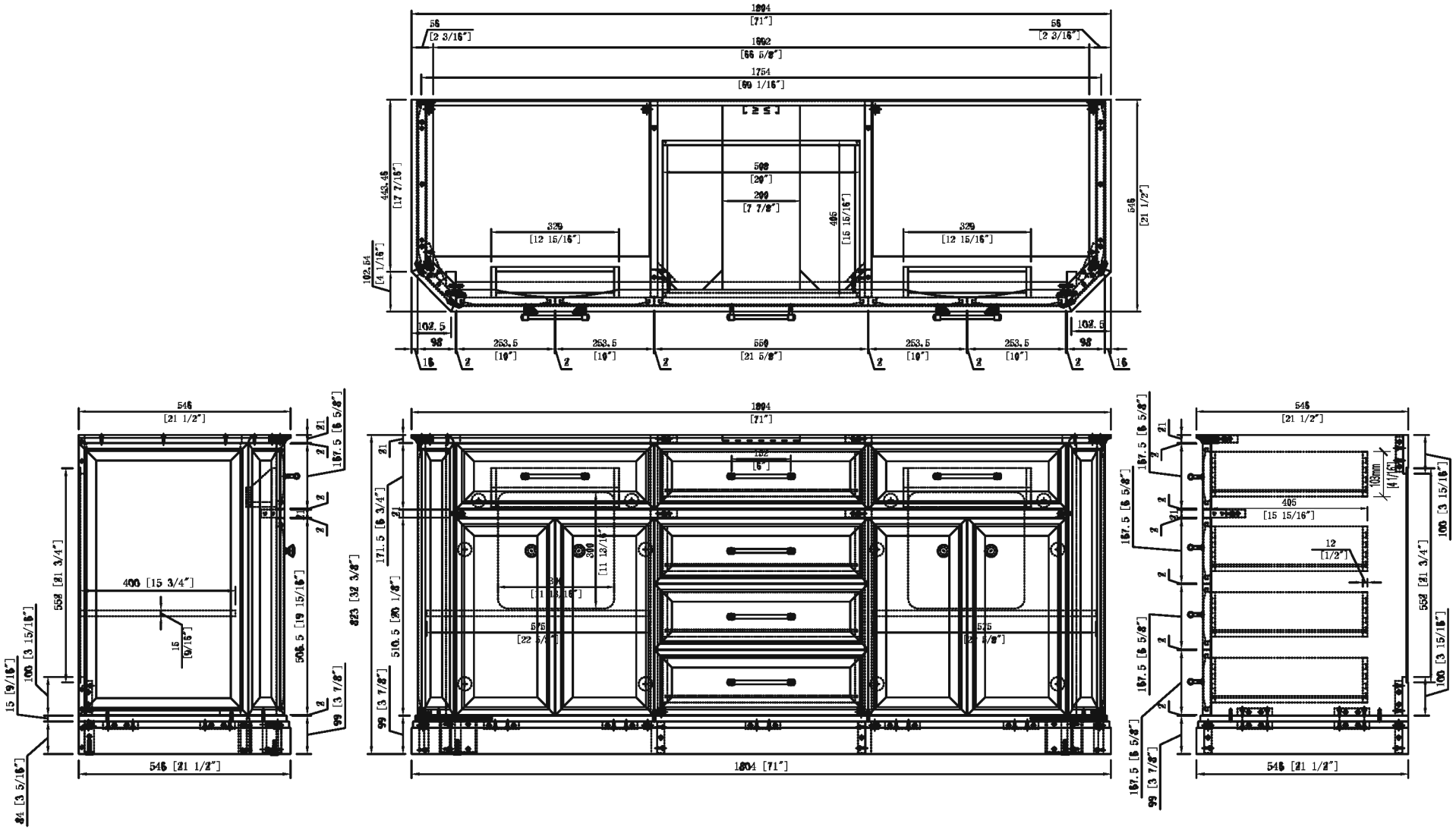
1804
[71"]
56
[2 3/16"]
1692
[66 5/8"]
1754
[69 1/16"]
508
[20"]
200
[7 7/8"]
465
[18 15/16"]
329
[12 15/16"]
329
[12 15/16"]
443.46
[17 7/16"]
102.54
[4 1/16"]
546
[21 1/2"]
102.5
98
253.5
[10"]
550
[21 5/8"]
16
2
546
[21 1/2"]
21
157.5 [6 5/8"]
558 [21 3/4"]
400 [15 3/4"]
15 [9/16"]
506.5 [19 15/16"]
100 [3 15/16"]
15 [9/16"]
99 [3 7/8"]
84 [3 5/16"]
546 [21 1/2"]
1804
[71"]
152
[6"]
171.5 [6 3/4"]
823 [32 3/8"]
390
[11 13/16"]
510.5 [20 1/8"]
575
[22 5/8"]
99 [3 7/8"]
1804 [71"]
546
[21 1/2"]
157.5 [6 5/8"]
103mm
[4 1/16"]
405
[15 15/16"]
12
[1/2"]
558 [21 3/4"]
100 [3 15/16"]
99 [3 7/8"]
546 [21 1/2"]

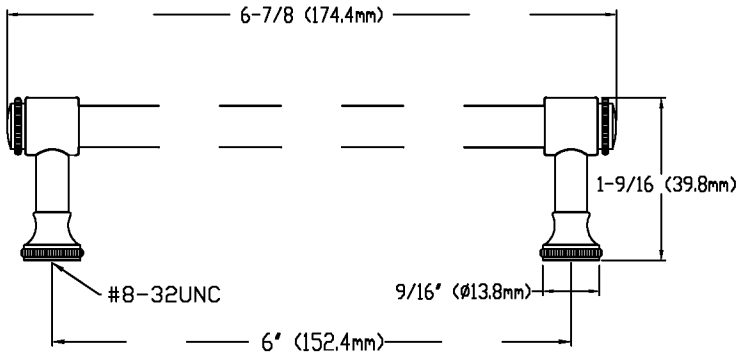
6-7/8 (174.4mm)
1-9/16 (39.8mm)
#8-32UNC
9/16" (Ø13.8mm)
6" (152.4mm)

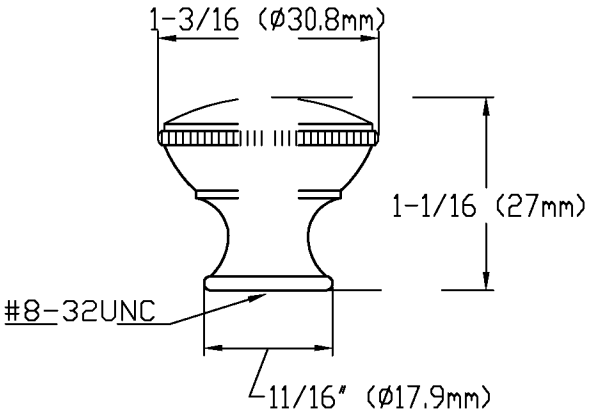
1-3/16 (Ø30.8mm)
1-1/16 (27mm)
#8-32UNC
11/16" (Ø17.9mm)