Serial Number:MCV27-13
R1.0

Installation and Operating Manual

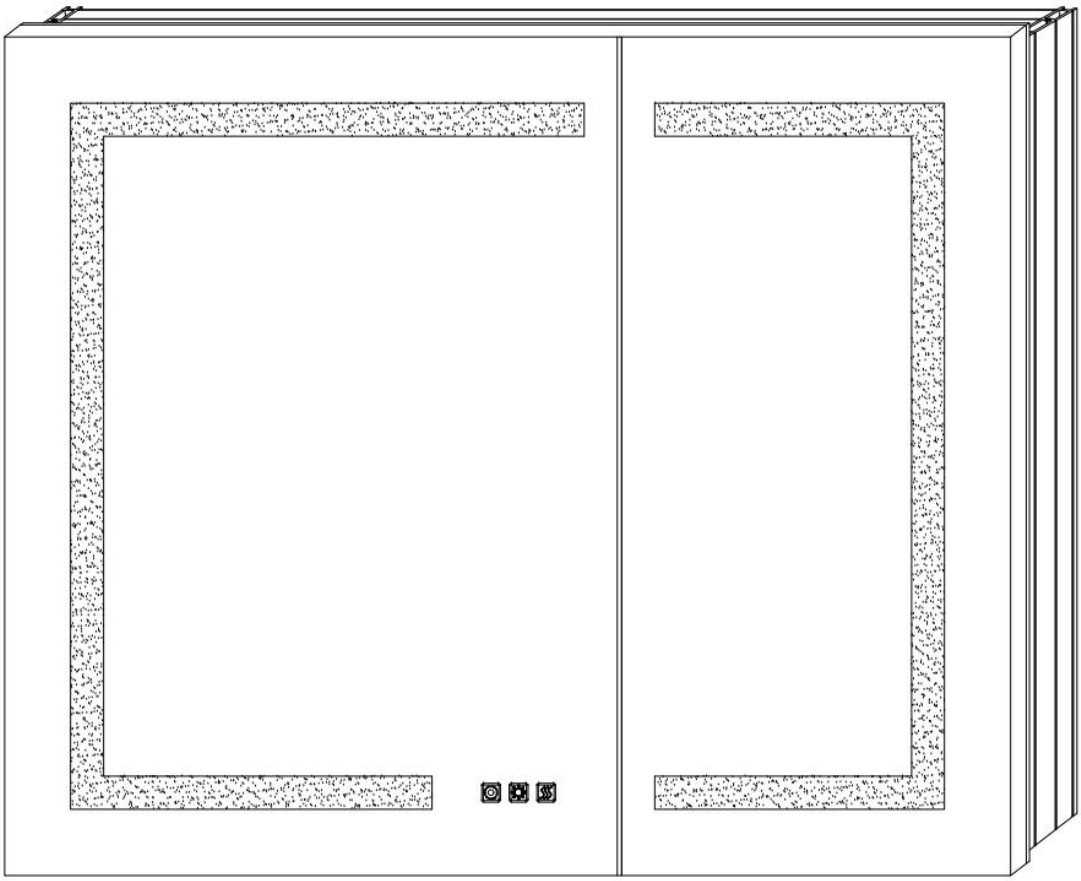

For Technical support or questions, please call us at + 1 302 336 8180.

Model Specification

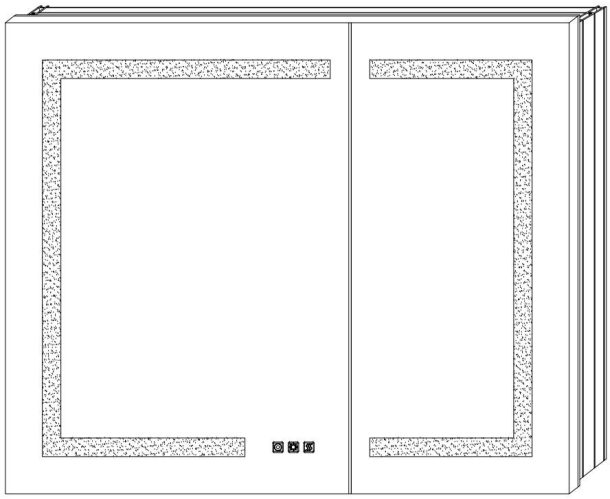

- **UPVC Frame**
- **Integrated LED**
- **Double Mirror**
- **Adjustable Shelves**
- **Quiet Hinge**
- **Recessed or surface mounting**
- **Color Temperature:3000-6000K**
- **Dimming**
- **Anti Fog**

No.	Dimension	Color	Door Type	Remark
1	24"×30"	Silver	Single door Left or Right	
2	30"×30"	Silver	Double Door	
3	36"×30"	Silver	Double Door	

Hotline: +1 302 336 8180

Note

For easy and safe installation, please refer to the following:

Read all instructions thoroughly before installing the enclosed product. Read and take note of all **Safety Precautions**, care and maintenance information.

PLEASE KEEP THIS INSTRUCTION MANUAL FOR FUTURE REFERENCE DURING PRODUCT OPERATION AND MAINTENANCE.



WARNING AND SAFETY INSTRUCTIONS

Before installing your LED Medicine Cabinet, please make sure that you carefully read through this instruction sheet, refer back to them during installation to ensure your product is fitted safely and correctly. Keep the instructions for future use.

WARNING Risk of Fire and Electric Shock

●All fittings must be installed in accordance with current IEE wiring regulations. If in doubt, please consult a qualified electrician.

●Turn breaker off the electrical supply at the main circuit board before installation and maintenance.

●Suitable for indoor use only. This product should be positioned well away from curtains and fabrics. Never cover the mirror.

●Regularly check any parts for damage, if any part is damaged the product should not be used.

INSTALLATION SAFETY

●Inspect the product immediately upon receipt for any possible damage during transportation or missing parts. Handle the product with care and protect against knocks to all sides and edges of the glass.

●Ensure there are no hidden pipes or cables in the wall before drilling and sawing.

●Wear suitable safety glasses when drilling. Take care if drilling on tiled surfaces in case the drill slips.

CAUTION

The light source of this product is non-changeable light diodes (LED). Do not disassemble the product, as the light diodes can cause damage to the eyes.

NOTE:The important safeguards and instructions that appear in this manual are not meant to cover all possible conditions and situations that may occur. It must be understood that common sense, caution and care are factors that can't be built into any product. These factors must be supplied by the person(s) caring for and operating the fixture. Do not install this fixture in hazardous locations.

PARTS SUPPLIED

Z- Mounting Bar ×1

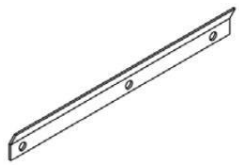

Z-Supporting Hook ×1

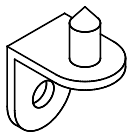

Anchors A ×1

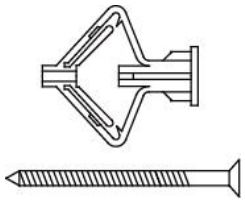

Shelves Support ×4~8

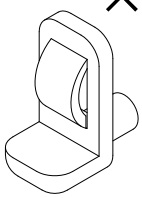

Wire Cap ×3

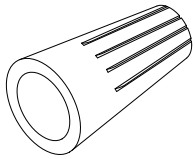

Hinge Covers ×2~8



Shelves ×2~6

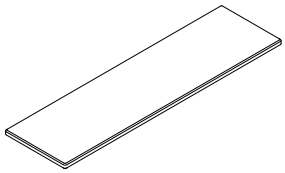

Anchor Screws ×5~10

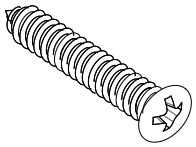

Anchors B ×5~10



Hotline: +1 302 336 8180

TOOLS REQUIRED

Drill



Pencil

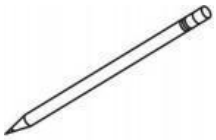

Level

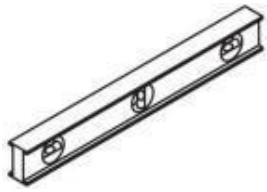

Tape

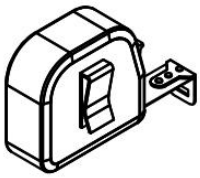

Gloves



Safety Glasses



Phillip Screw Driver



Drill Bit 8mm(5/16”)

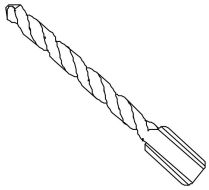

Hammer

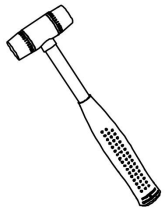

Installation Instruction



The medicine cabinet supports two installation methods:
1.Surface Installation and 2.Embedded Installation.

Please choose the installation way that best suits you.



Some cabinet doors will be packed uninstalled but inside the cabinet to reduce packaging volume. Please install the cabinet door after completing the cabinet installation according to the instructions.

Before installing the medicine cabinet, please remove the cabinet doors first. This will make the installation easier, more convenient and safer.

1. First, disconnect the cords from the cabinet .

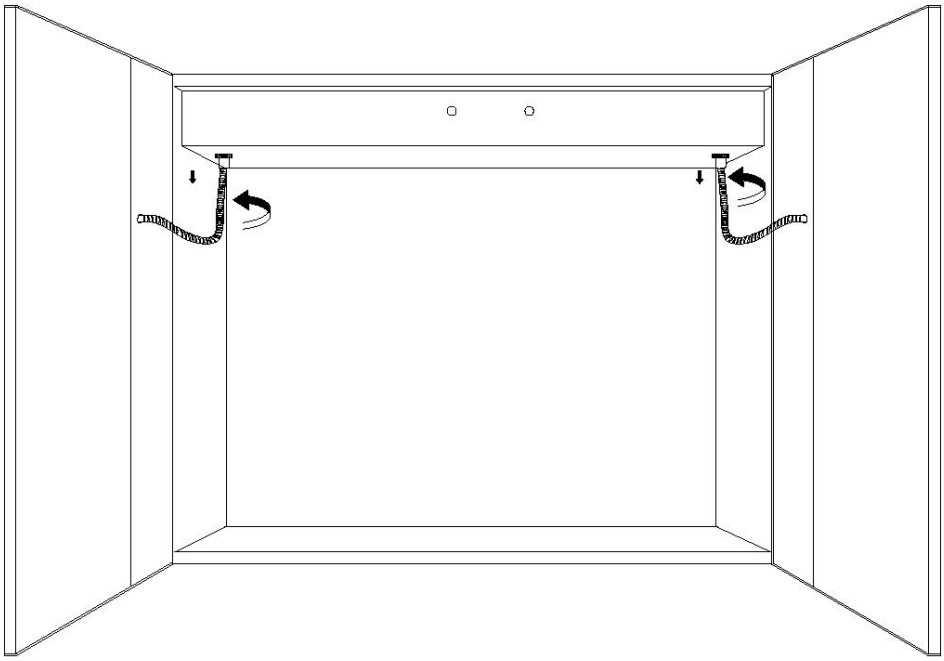

2. Then, press the end of the hinges and detach the cabinet door.

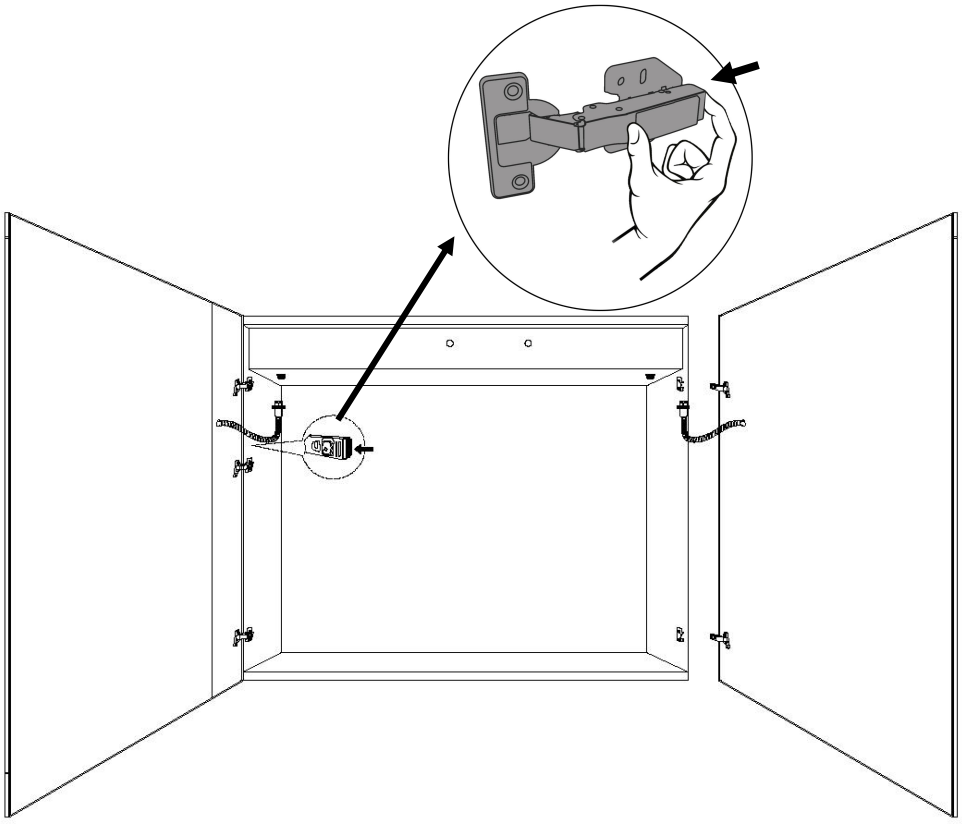

Surface Installation Instruction

Verify minimum clearances

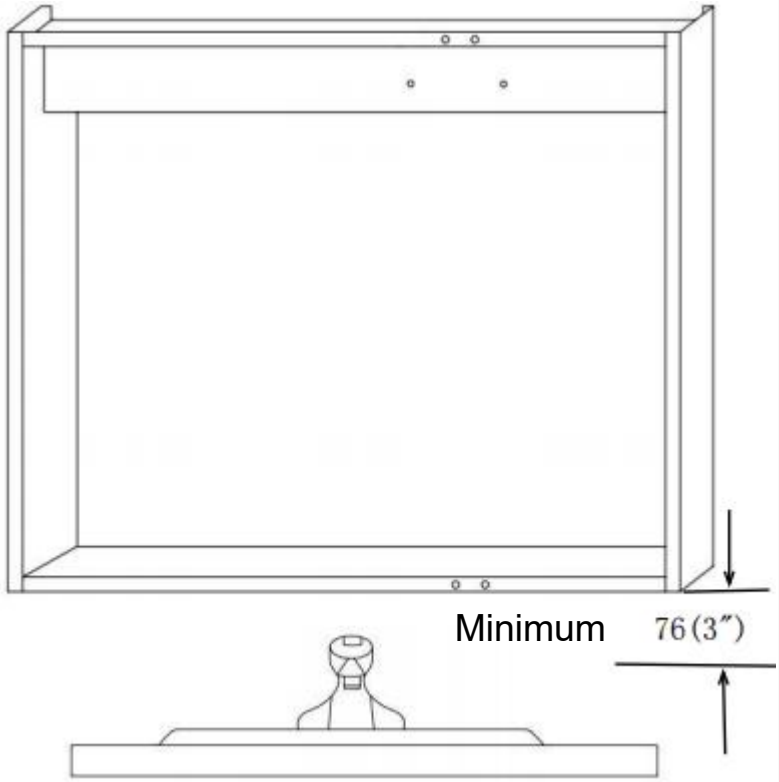

STEP 1

H is the total height of the medicine cabinet, and W is the total width of the medicine cabinet

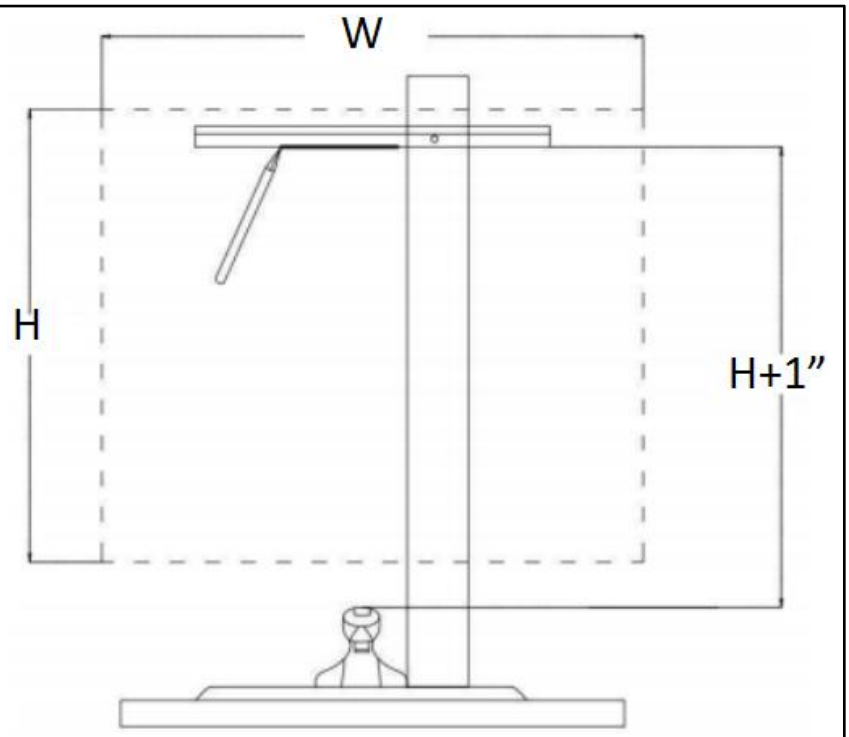

STEP 2

Surface Installation Instruction

Connect the wires

BLACK WIRE --- POWER SUPPLY L (LINE)
WHITE WIRE --- POWER SUPPLY N (NEUTRAL)
GREEN WIRE --- POWER SUPPLY G (GROUND)

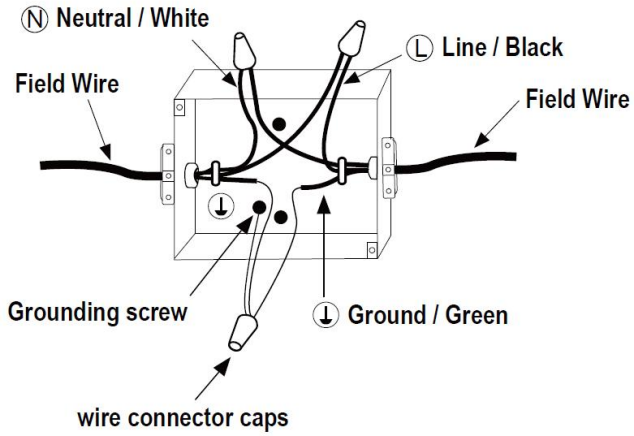

STEP 3

Lift the cabinet and slide it down over the mounting bar.
Make sure the hooks engage the bar.

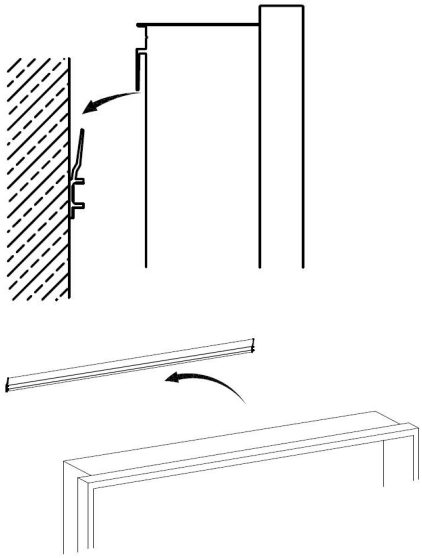

STEP 4

Place the support angle on the bottom of the cabinet and mark hole location on the wall. Drill hole and insert anchor where needed. Fix the support angle by screw. Always look for wood studs behind the drywall for stronger installation.

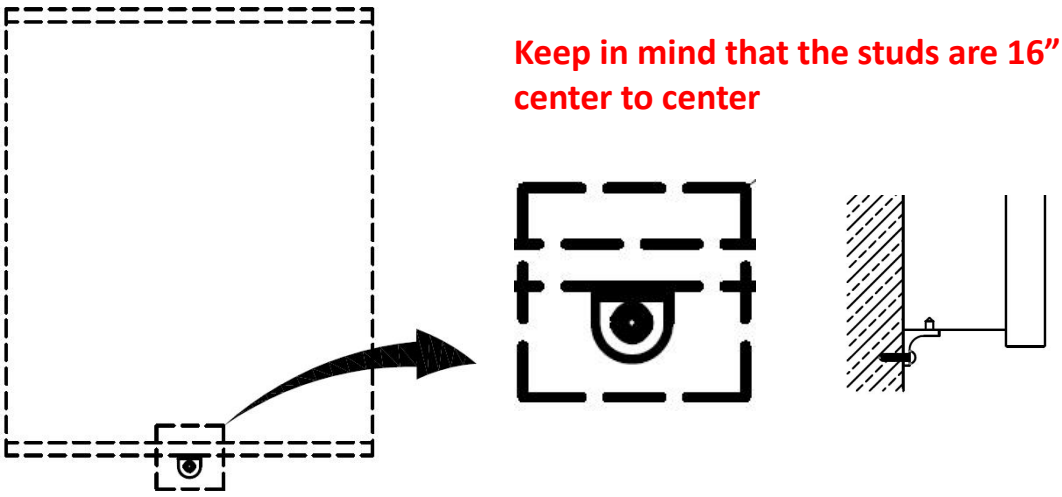

Keep in mind that the studs are 16" center to center

For instructions on using anchors, please refer to the next page.

STEP 4

Hotline: +1 302 336 8180

Surface Installation Instruction

Rules for Selecting Anchors

Anchors A

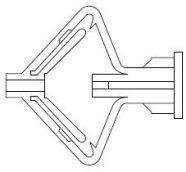

Installing on Drywall:

- Use Anchors A to ensure a secure installation on drywall.
- Anchors A are designed to provide adequate support on drywall.

Anchors B



Installing on concrete wall:

- Use Anchors B for a stronger installation.
- Anchors B are specifically designed for concrete wall, offering higher fastening strength.

STEP 6

Install the glass shelves by mounting them over the shelves support.

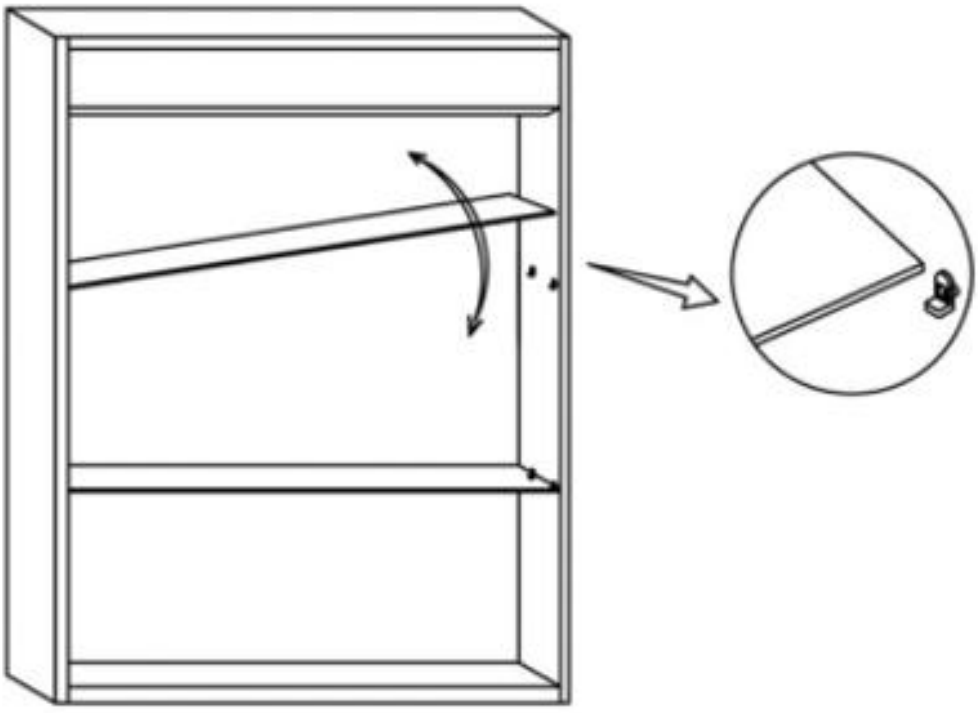

STEP 7

Step8：Cabinet Door Installation

1.Please ensure that the latch on the hinge is fully extended. This can be achieved by rotating the adjusting screw clockwise near the latch, which will make it easier to install the cabinet door.

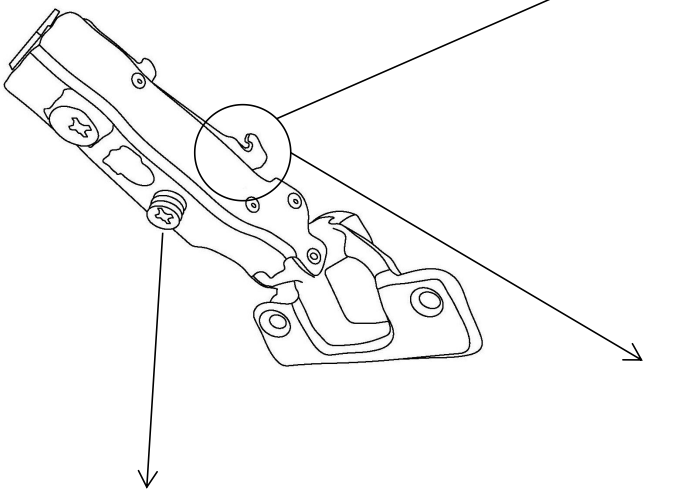

Adjusting screw

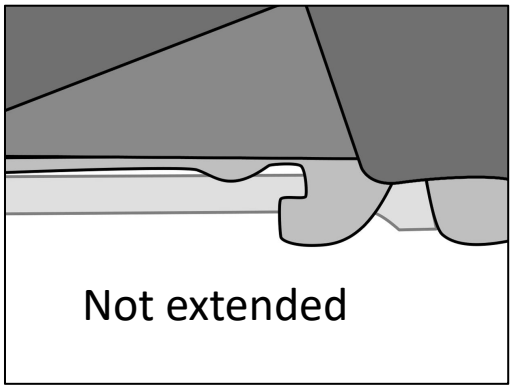

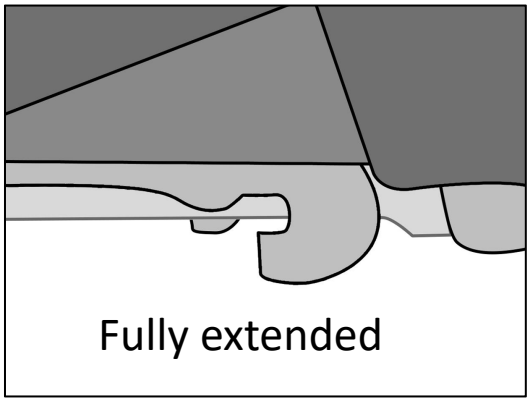

2.Insert the hinges to the base ,then connect the doors with the cabinet.

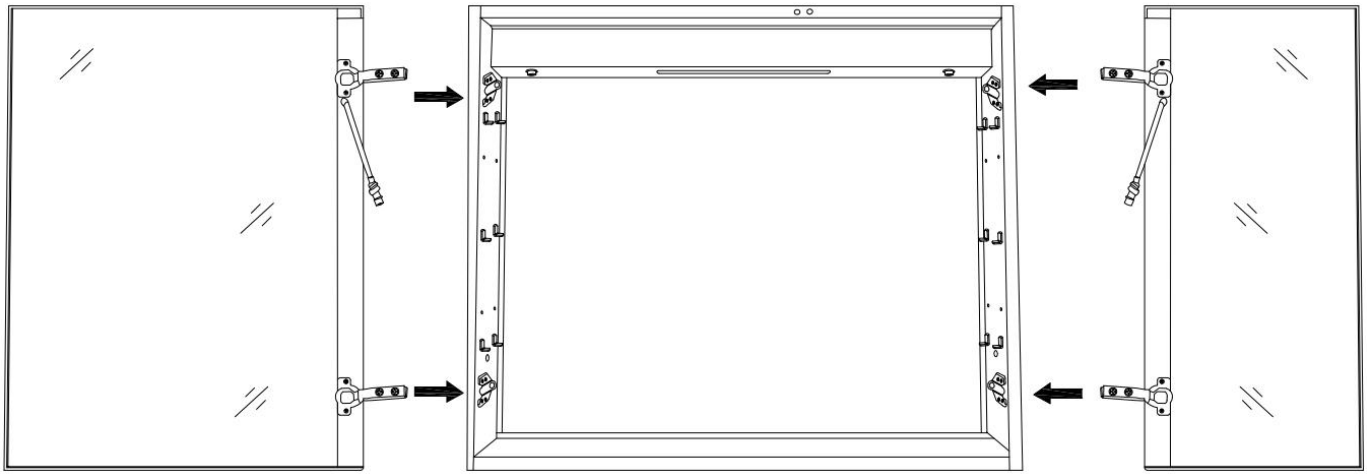

Step8：Cabinet Door Installation

3.If necessary , adjust corresponding screws on the hinge to align the doors, ensure that gaps are even and the doors open and close smoothly.(For the specific adjustment method, refer to page 18.)

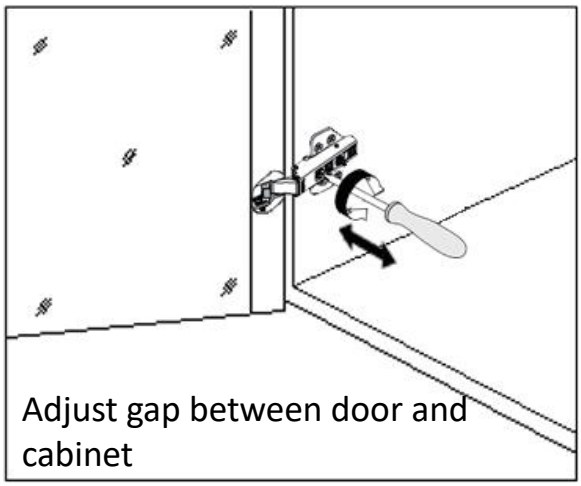

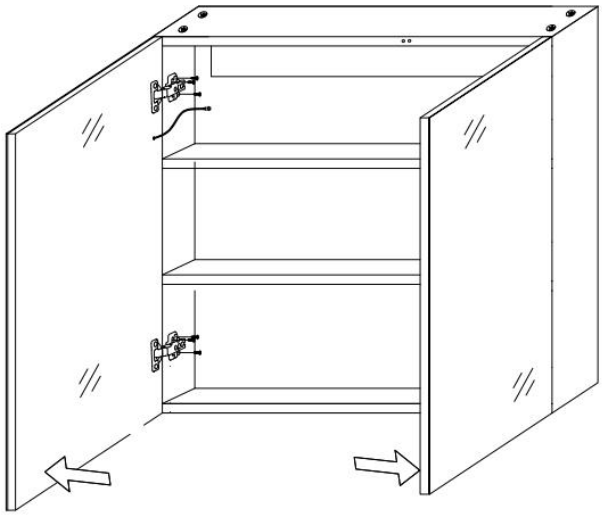

4. Connect the electrical cord on the door to the cabinet and tighten it properly.

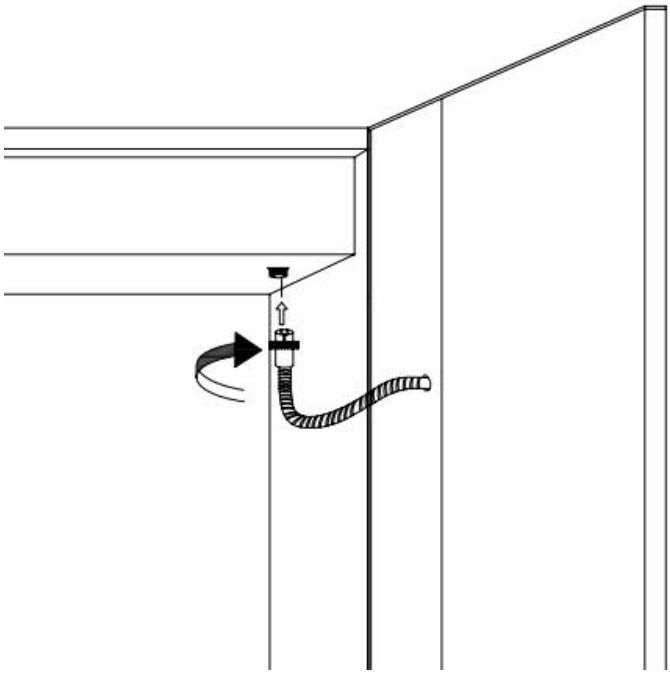

Embedded Installation Instruction

Before installing, it is necessary to determine the opening size, which can be referred to in the table below.

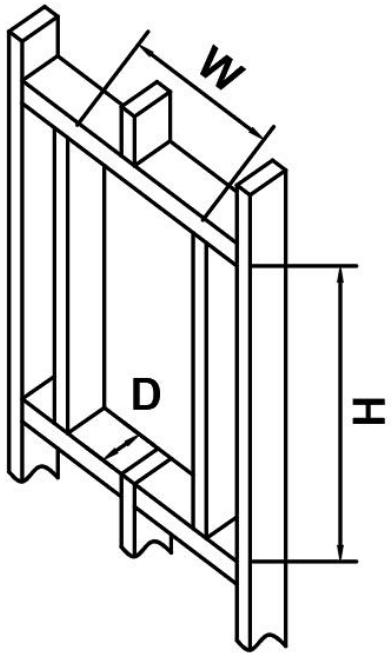

Actual cabinet		Wall opening dimensions for embedded installation all in Inches.		
No.	Dimensions	W（Width）	H（Height）	D（Depth）
1	24"×30"	23-1/4	29-1/4	4-3/8
2	30"×30"	29-1/4	29-1/4	4-3/8
3	36"×30"	35-1/4	29-1/4	4-3/8

Embedded Installation Instruction

Determine the size of the opening

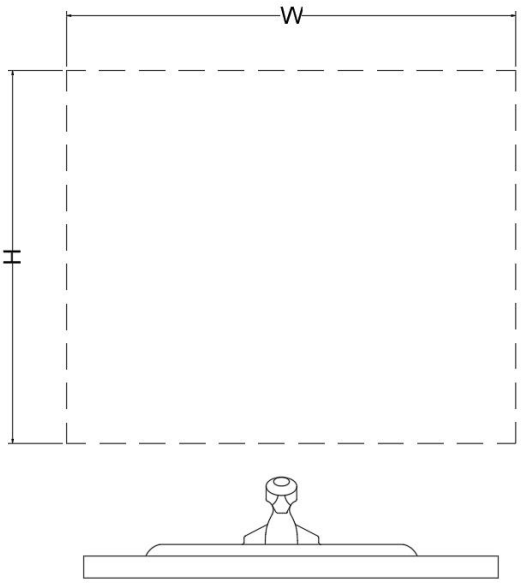

STEP 1

Connect the wires

BLACK WIRE --- POWER SUPPLY L (LINE)
WHITE WIRE --- POWER SUPPLY N (NEUTRAL)
GREEN WIRE --- POWER SUPPLY G (GROUND)

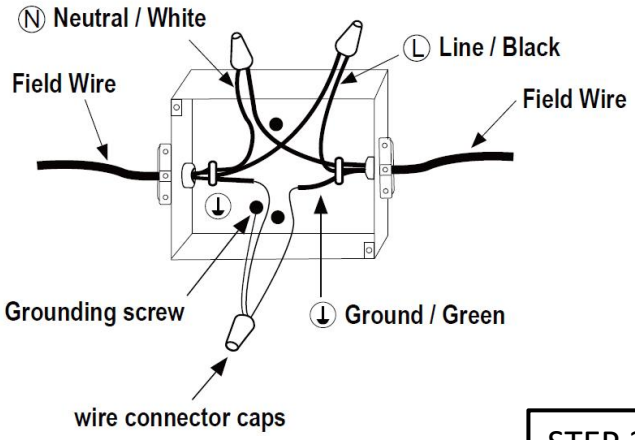

STEP 2

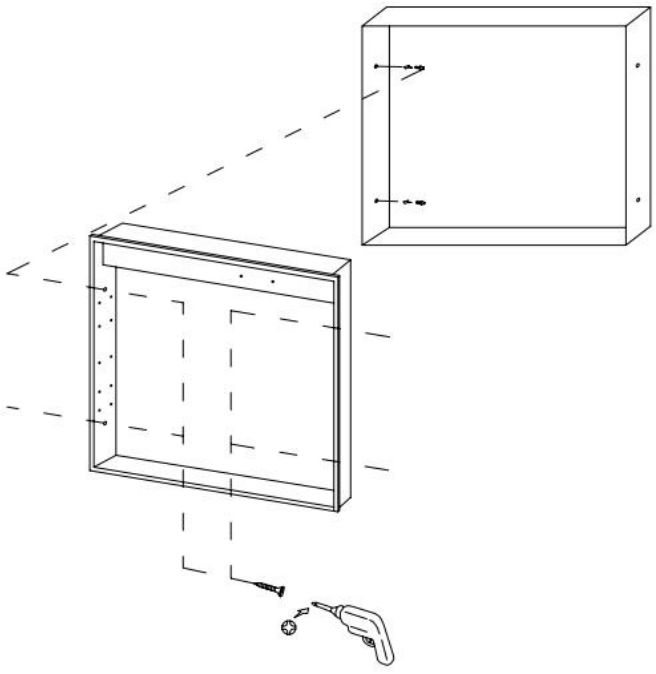

STEP 3

Install the glass shelves by mounting them over the shelves support.

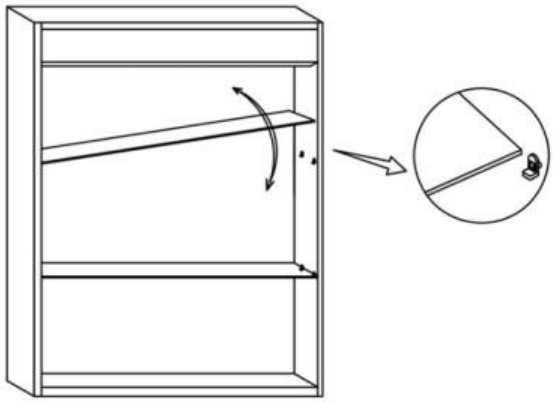

STEP 4

*All diagrams are for reference only.All model dimensions and proportion position will vary.

Hotline: +1 302 336 8180

Step5：Cabinet Door Installation

1.Please ensure that the latch on the hinge is fully extended. This can be achieved by rotating the adjusting screw clockwise near the latch, which will make it easier to install the cabinet door.

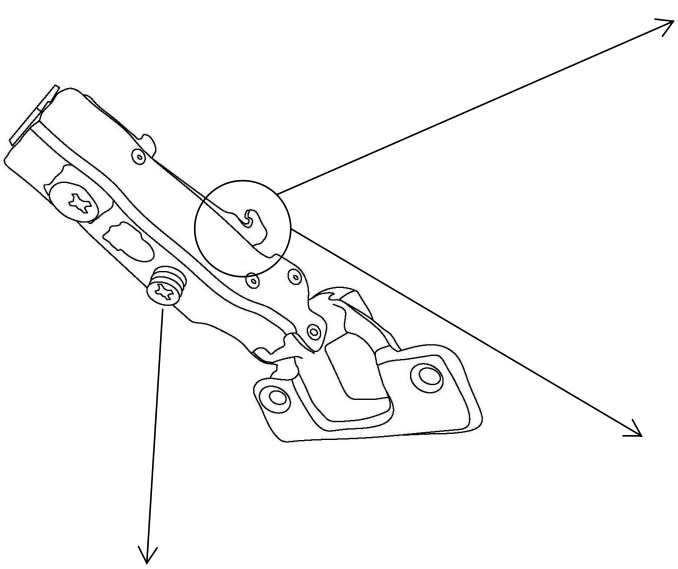

Adjusting screw

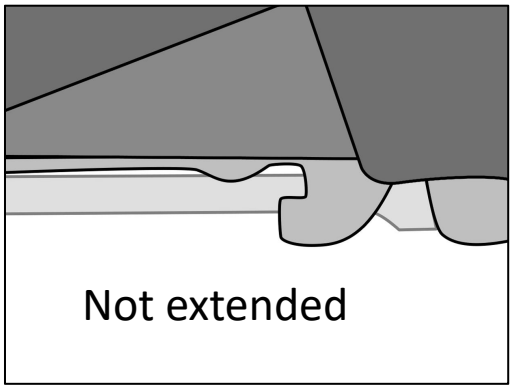

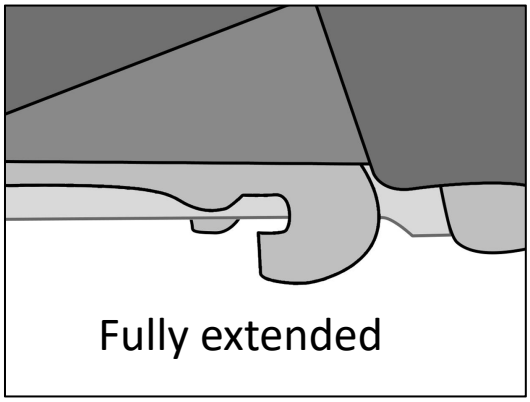

2.Insert the hinges to the base ,then connect the doors with the cabinet.

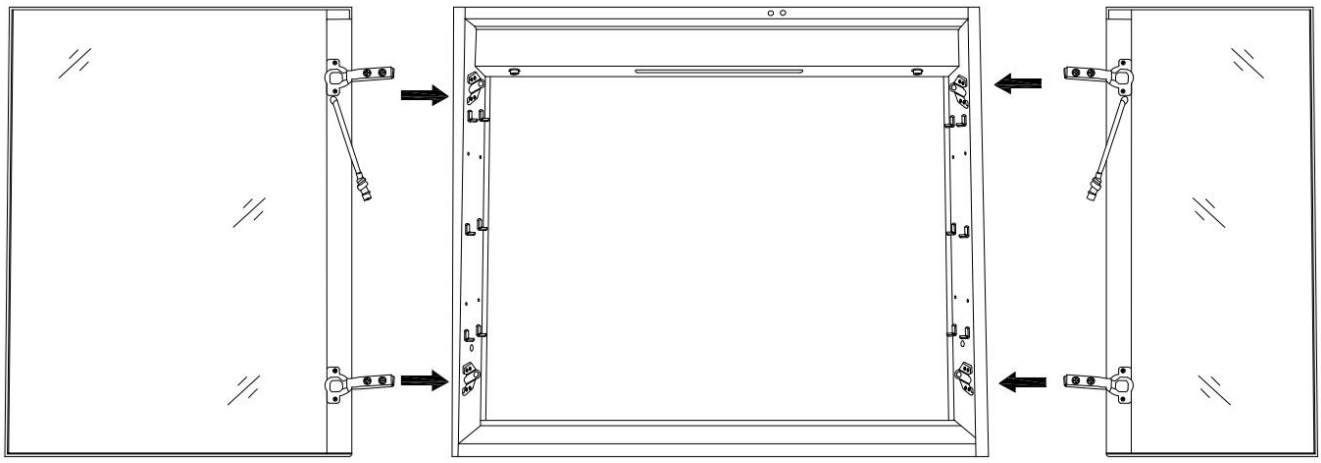

Step5：Cabinet Door Installation

3.If necessary , adjust corresponding screws on the hinge to align the doors, ensure that gaps are even and the doors open and close smoothly. (For the specific adjustment method, refer to page 18.)

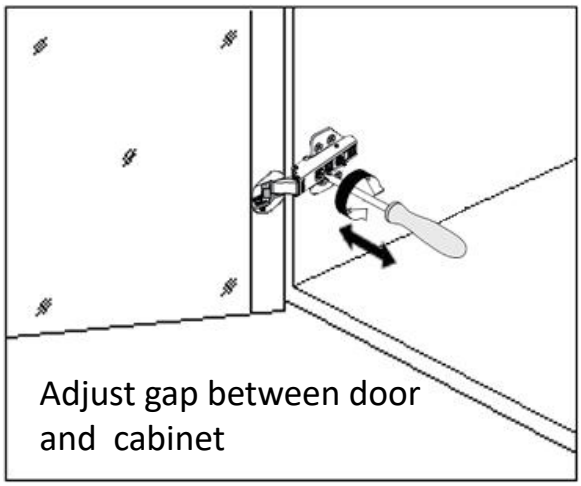

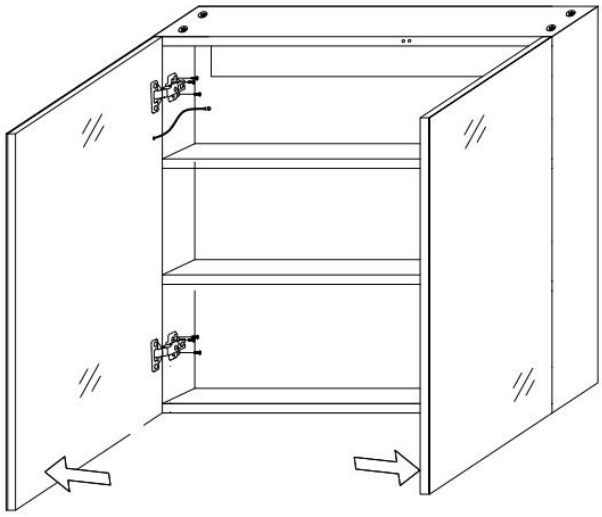

4. Connect the electrical cord on the door to the cabinet and tighten it properly.

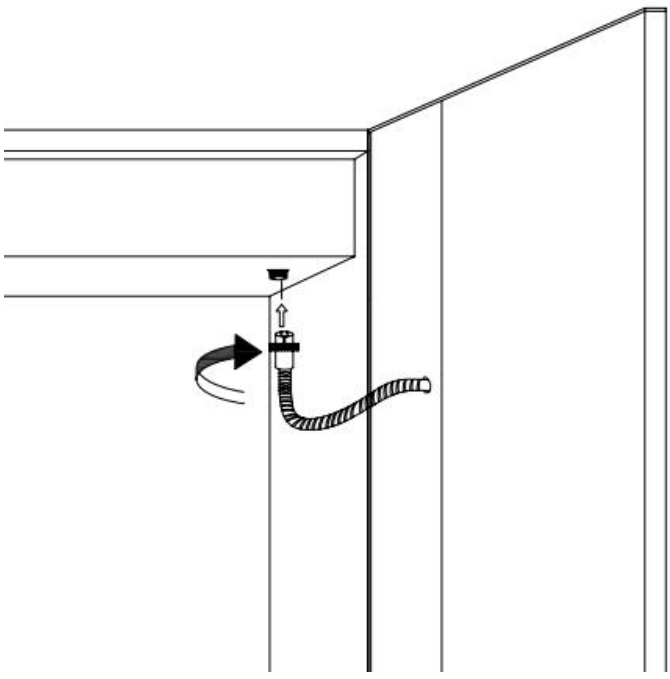

Hinge adjustment method

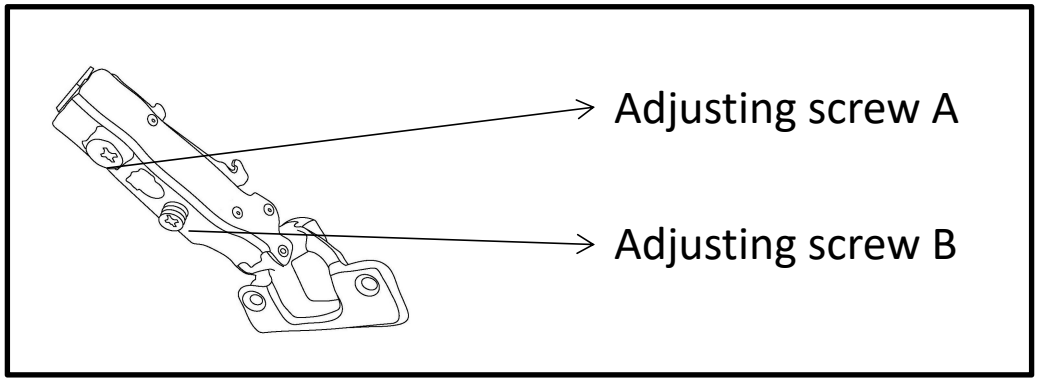

Adjusting screw A

Adjust the gap and vertical alignment between the door and the door frame.

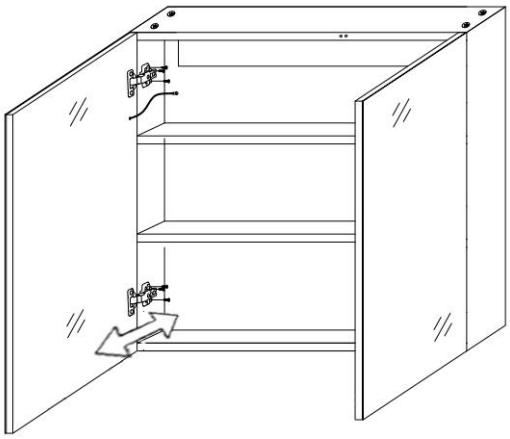

Adjusting screw B

Adjust the gap between the door frame and the cabinet body.

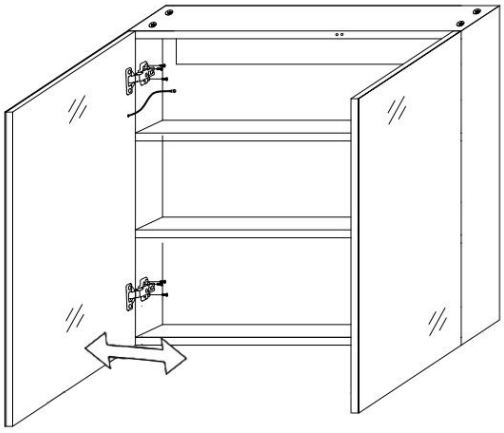

Operating Manual

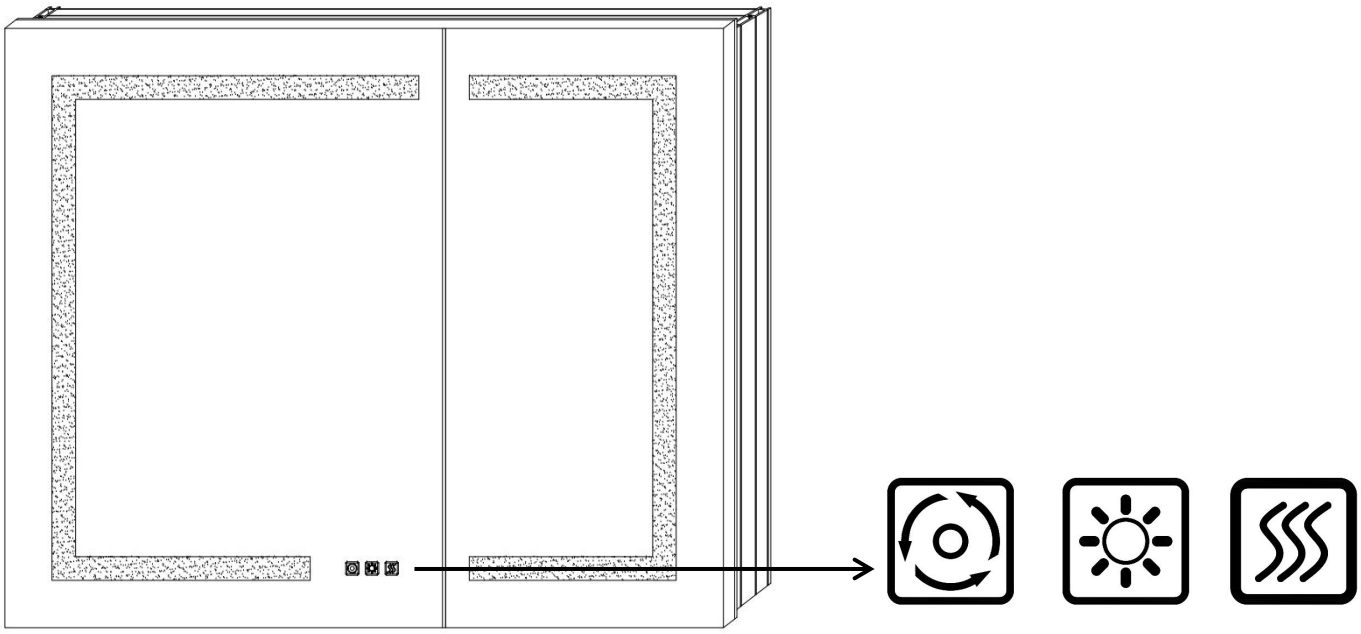

The buttons turn blue when connected to the main power supply and turn white after a brief touch.



- **Briefly touch the button to turn the mirror on or off.**
- **Press and hold the button to change the color temperature when the mirror is on.**
- **Optional to be wired to wall switch by ON/OFF memory function.**

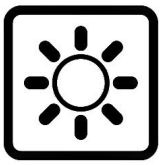

- **Briefly touch the button to turn the mirror on or off.**
- **Press and hold the button to adjust the brightness.**
- **Release the button when the brightness reaches your desired level**





- **The mirror begins to warm up and defog after you press the defogger button.**
- **Press the button again to turn off the anti-fog function.**
- **Press and hold the button to turn the blue backlight on or off.**
- **Note: To prevent damage from prolonged high temperatures, the defogger will automatically stop after 60 minutes of continuous operation.**

Hotline: +1 302 336 8180

Operating Manual

Manual to Interior LED Light

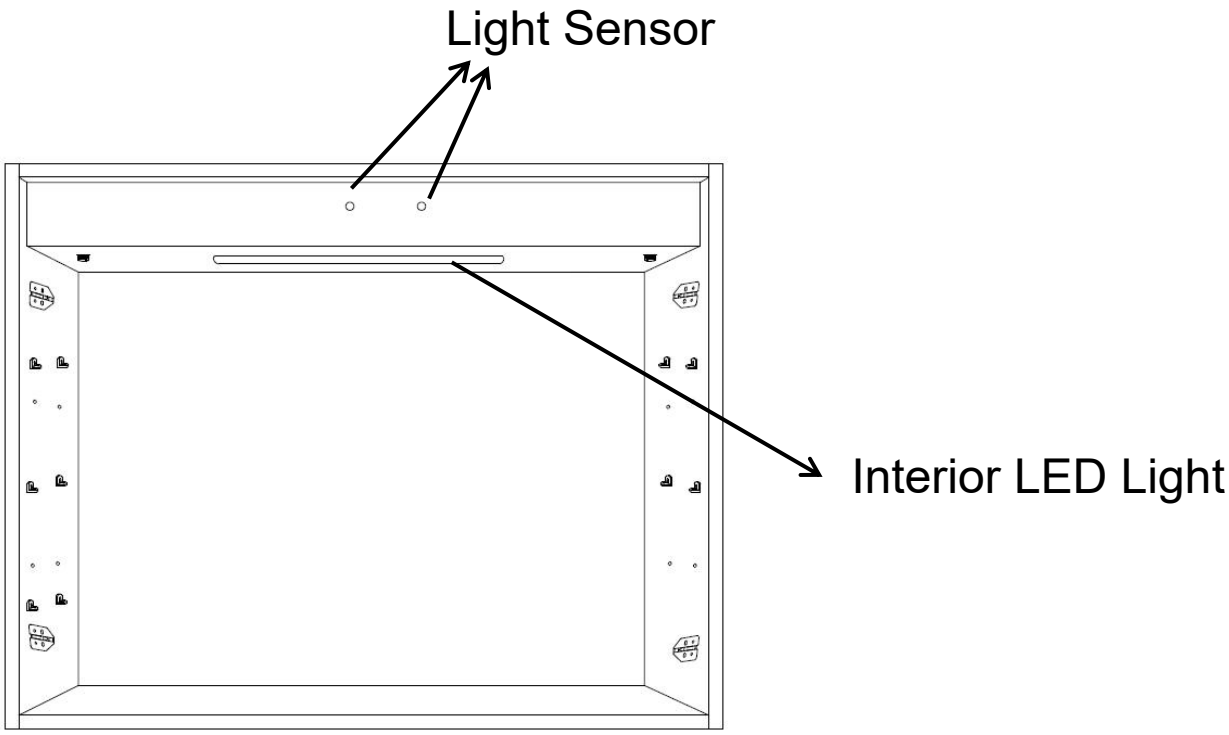

- The Interior LED Light will be automatically on when the cabinet door is opened.
- Don't cover the light sensor.

Hotline: +1 302 336 8180