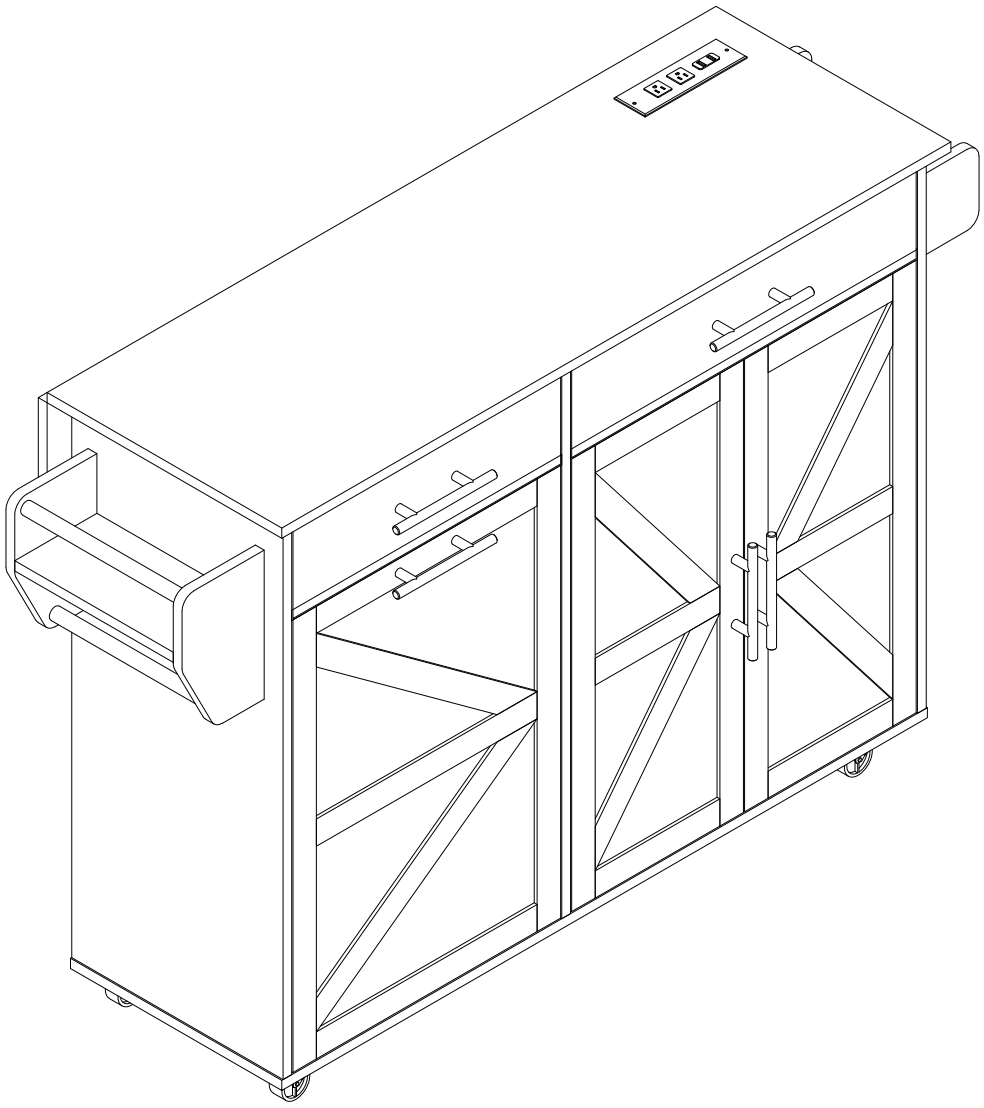
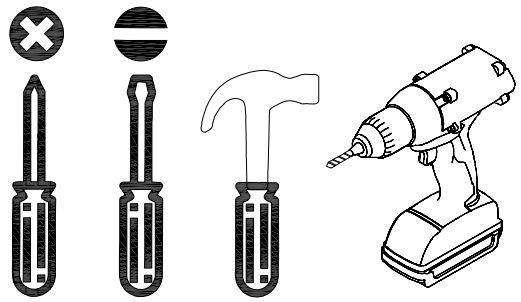
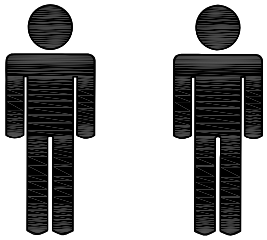
# I870100587A1/A2





Tools required
(not included)



2 people for assembly

# Safety and Care Advice

## Important – Please read these instructions fully before starting assembly

- Check you have all the components and tools listed on the following pages.
- Remove all fittings from the plastic bags and separate them into their groups.
- Keep children and animals away from the work area, small parts could choke if swallowed.
- Make sure you have enough space to layout the parts before starting.
- During assembly do not stand or put weight on the product, this could cause damage.
- Assemble the item as close to its final position (in the same room) as possible.
- Assemble on a soft level surface to avoid damaging the unit or your floor.
- Parts of the assembly will be easier with 2 people.



- To reduce the likelihood of damaging your product please ensure that your power drill is set on a low torque setting.

## Care and maintenance

- Only clean using a damp cloth and mild detergent, do no use bleach or abrasive cleaners.
- From time to time check that there are no loose screws on this unit.
- This product should not be discarded with household waste. Take to your local authority waste disposal centre.

## Handy Hints

- Assemble all parts and bolts loosely during assembly, only once the product is complete should you fully tighten the bolts
- Regularly check and ensure That all bolts and fittings are tightend properly.

## WARNING
### In order to help prevent overturning – please follow these instructions

To help prevent product toppling over please follow the below steps:-

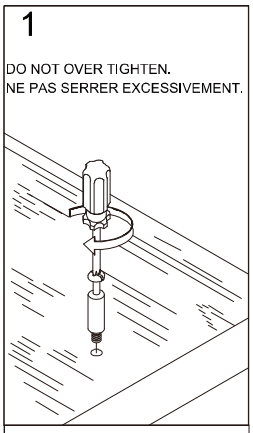
Use the anti tip stap or wall fixing method provided (if applicable)
Do not allow children to climb or hang on the furniture
Do not open more than one drawer at a time
Do not place heavy items in the top drawers
Do not place heavy items on top of the furniture, unless the furniture has been designed for this purpose

Please note that only the anti tip strap is provided.
You will need to provide wall plugs and screws applicable for your wall type

# Using Camlocks

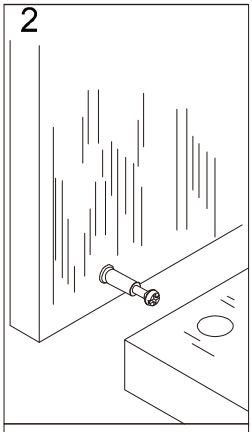
## Step 1

Connect the male camlock as diected in the assembly instructions using a scewdriver.




## Step 2

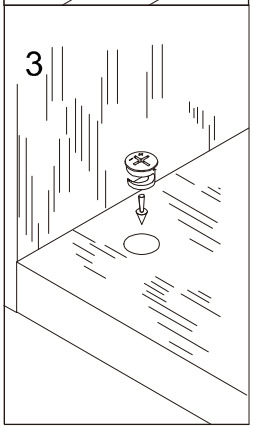
Push the male camlock into the entry hole.




## Step 3

Insert the femle camlock as shown in the instruction.

Note：ensure that the arrow on the top of the camlock points towards the entry hole for the male camlock.

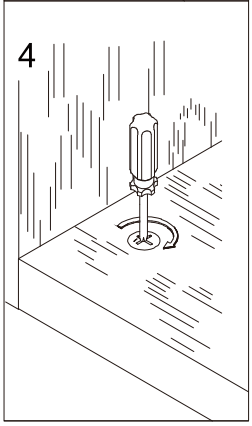



## Step 4

Turn the female camlock clockwise with a screwdriver.

You should feel a click when the camlock is locked in place.

The joint is now secure.




## ⚠WARNING



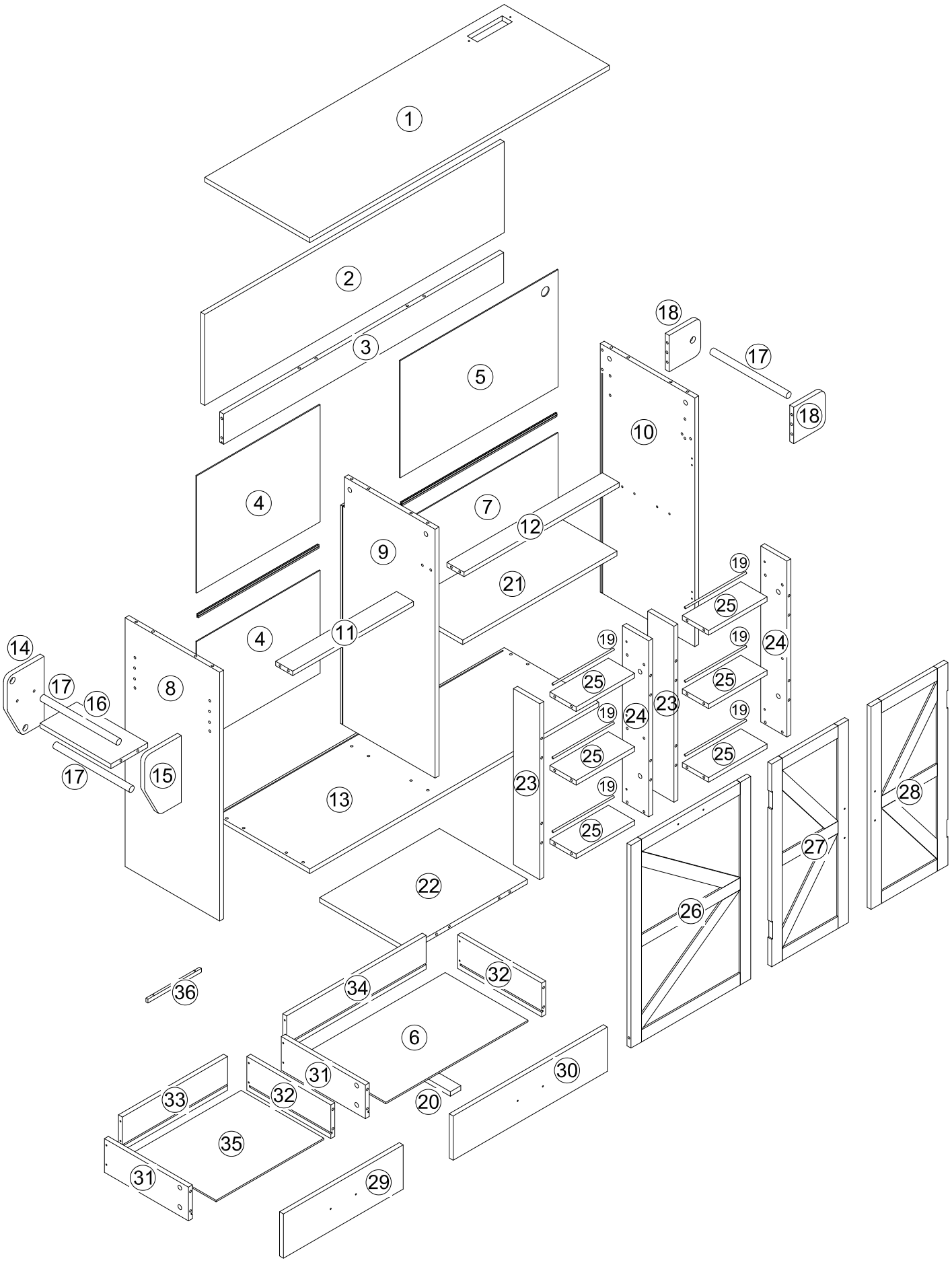


Children have died from furniture tipover. To reduce the risk of furniture tipover:

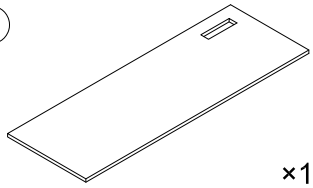
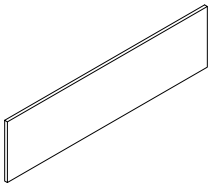
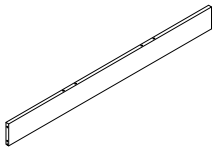
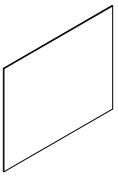
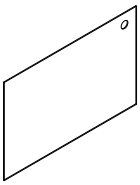
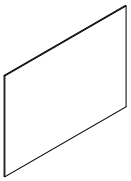
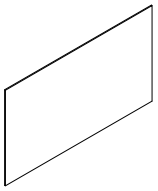
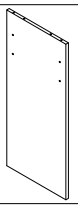
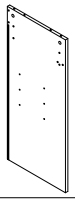
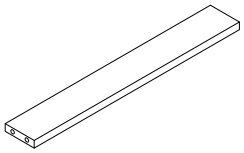
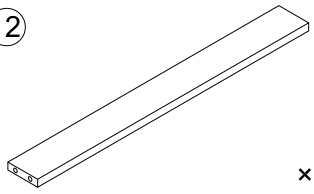
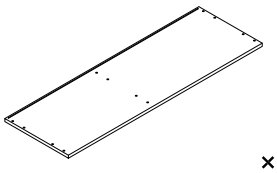
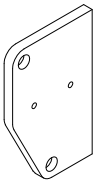
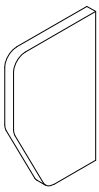
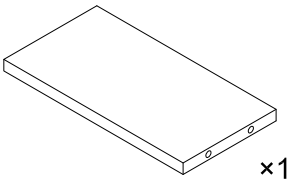
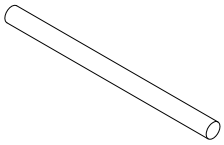
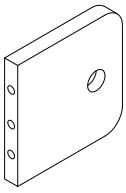
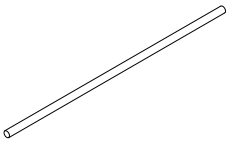
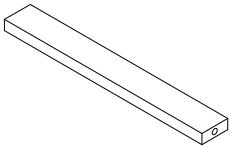
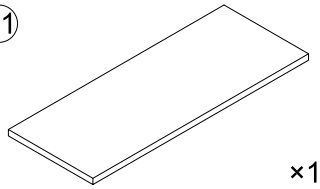
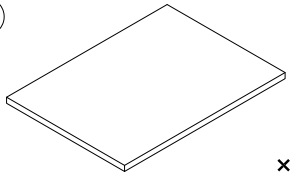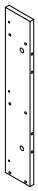
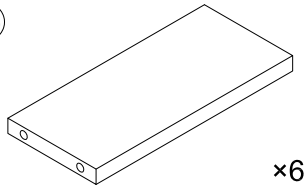
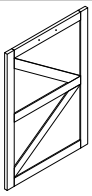
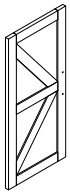
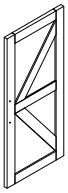
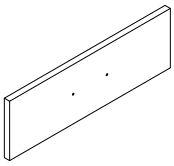
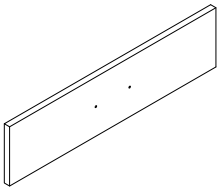
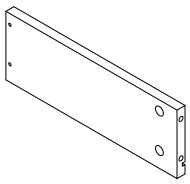
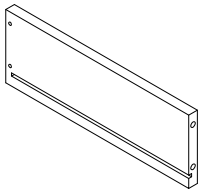
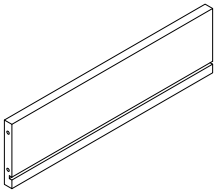
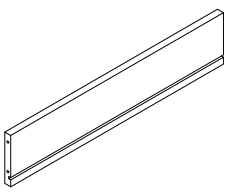
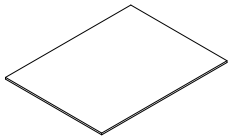
·ALWAYS install tipover restraint provided.
·NEVER put a TV on this product.
·NEVER allow children to stand. climb or hang on drawers, doors, or shelves.
·NEVER open more than one drawer at a time.
·Place heaviest items in the lowest drawers.

This is a permanent label.
Do not remove!

# PRODUCT ASSEMBLY



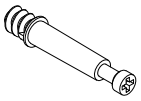
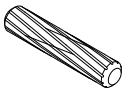
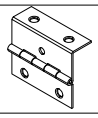
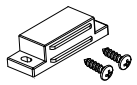
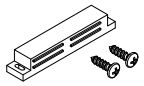
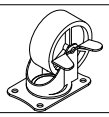
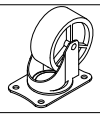
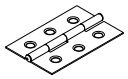
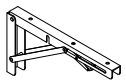
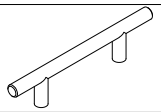
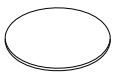
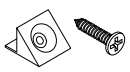
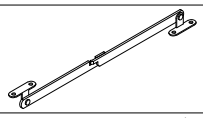
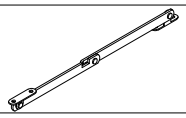
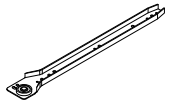
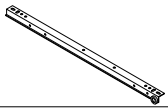
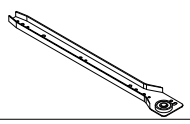
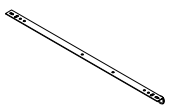
# Components - Panels

| | | | |
|---|---|---|---|
| ①  ×1 | ②  ×1 | ③  ×1 | ④  ×2 |
| ⑤  ×1 | ⑥  ×1 | ⑦  ×1 | ⑧  ×1 |
| ⑨  ×1 | ⑩  ×1 | ⑪  ×1 | ⑫  ×1 |
| ⑬  ×1 | ⑭  ×1 | ⑮  ×1 | ⑯  ×1 |
| ⑰  ×3 | ⑱  ×2 | ⑲  ×6 | ⑳  ×1 |
| ㉑  ×1 | ㉒  ×1 | ㉓  ×2 | ㉔  ×2 |
| ㉕  ×6 | ㉖  ×1 | ㉗  ×1 | ㉘  ×1 |
| ㉙  ×1 | ㉚  ×1 | ㉛  ×2 | ㉜  ×2 |
| ㉝  ×1 | ㉞  ×1 | ㉟  ×1 | ㊱  ×1 |
| | | | |

# Components - Fittings

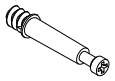
Please check you have all the panels listed below

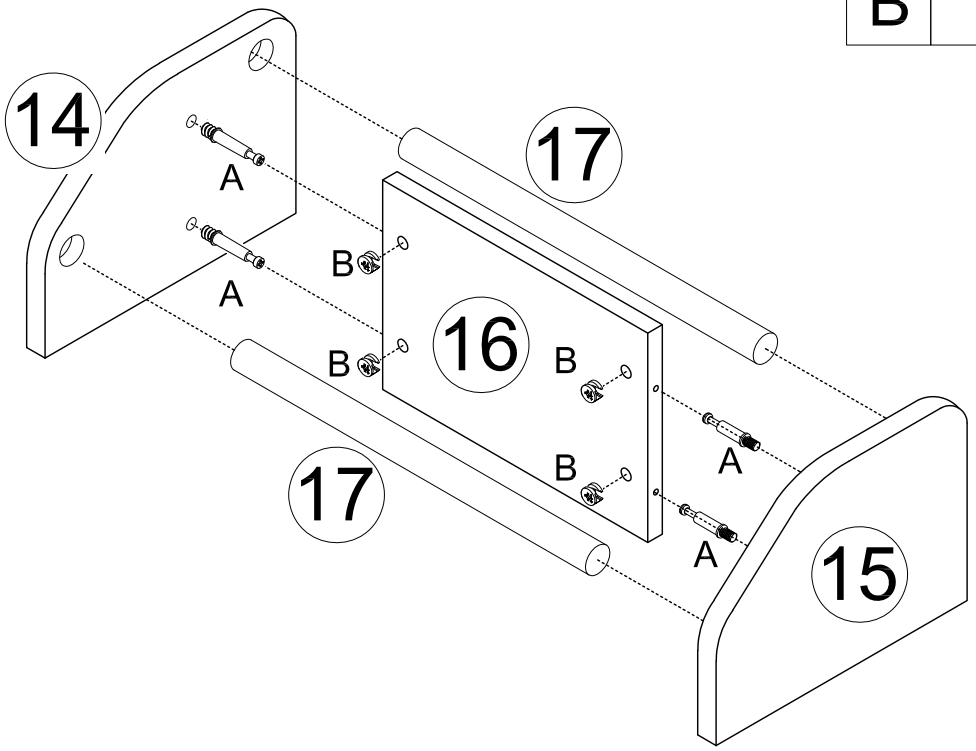
***Note:*** The quantities below are the correct amount to complete the assemble.In some cases more fittings may be supplied than are required.

| | | | | | |
|---|---|---|---|---|---|
| A |  | 60PCS<br>+2PCS | B |  | 60PCS<br>+2PCS |
| C |  | 46PCS<br>+2PCS | D | 4*30  | 8PCS |
| E |  | 4PCS | F |  | 1PC |
| G |  | 2PCS | H |  | 1PC |
| I | 5*40  | 15PCS | J |  | 1PC |
| K |  | 1SET | L | 3.5*12  | 58PCS<br>+2PCS |
| M |  | 2PCS | N |  | 3PCS |
| O | 4*12  | 24PCS<br>2PCS | P |  | 3PCS |
| Q |  | 2PCS | R |  | 1PC |
| S |  | 5PCS | T | 3*12 Ø5  | 23PCS<br>+2PCS |
| U |  | 16PCS | V |  | 3PCS |
| W |  | 2PCS | X |  | 3PCS |
| Y |  | 8PCS | Z |  | 10PCS<br>+2PCS |
| A1 |  | 2PCS | A2 | 4*20  | 2PCS |
| AL |  | 1PC | AR |  | 1PC |
| CL |  | 2PCS | DL |  | 2PCS |
| CR |  | 2PCS | DR |  | 2PCS |

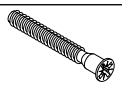
# PRODUCT ASSEMBLY

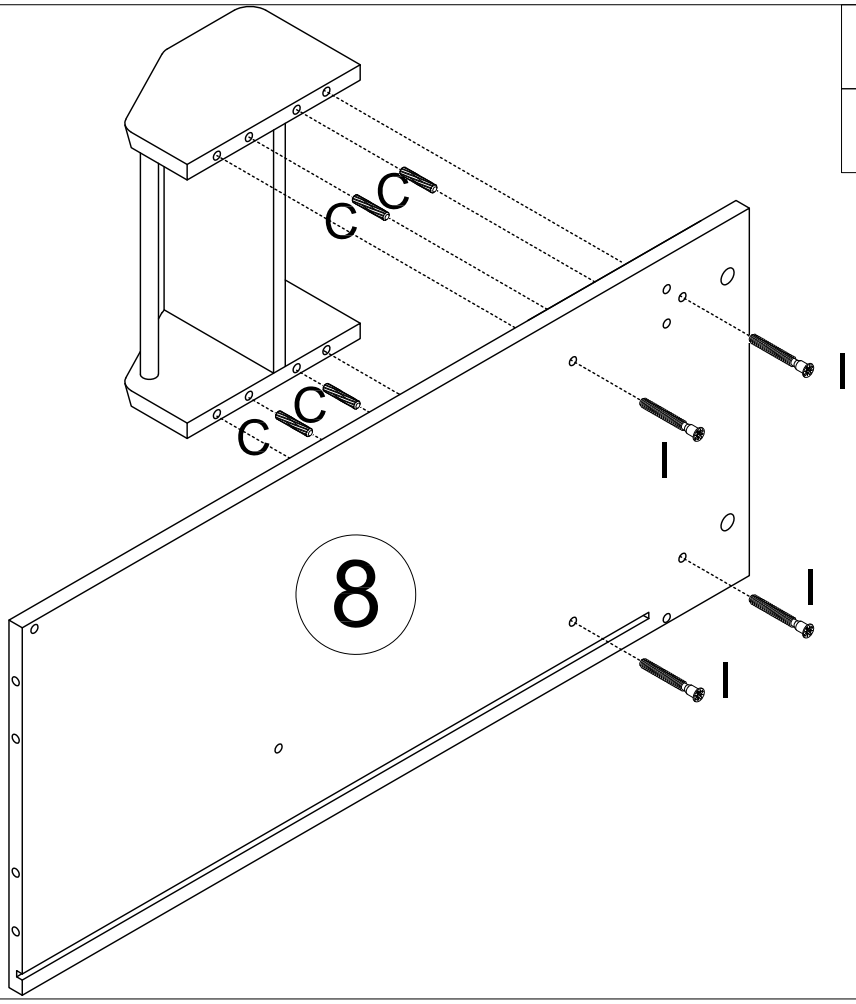
## STEP 1

| | | |
|---|---|---|
| A |  | ×4 |
| B |  | ×4 |



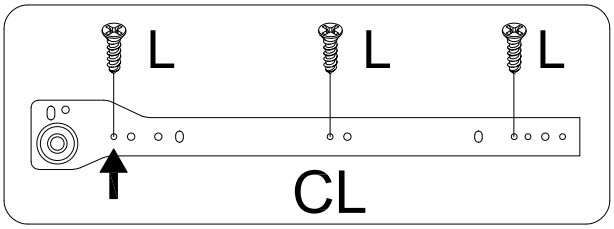

## STEP 2

| | | |
|---|---|---|
| I |  | ×4 |
| C |  | ×4 |

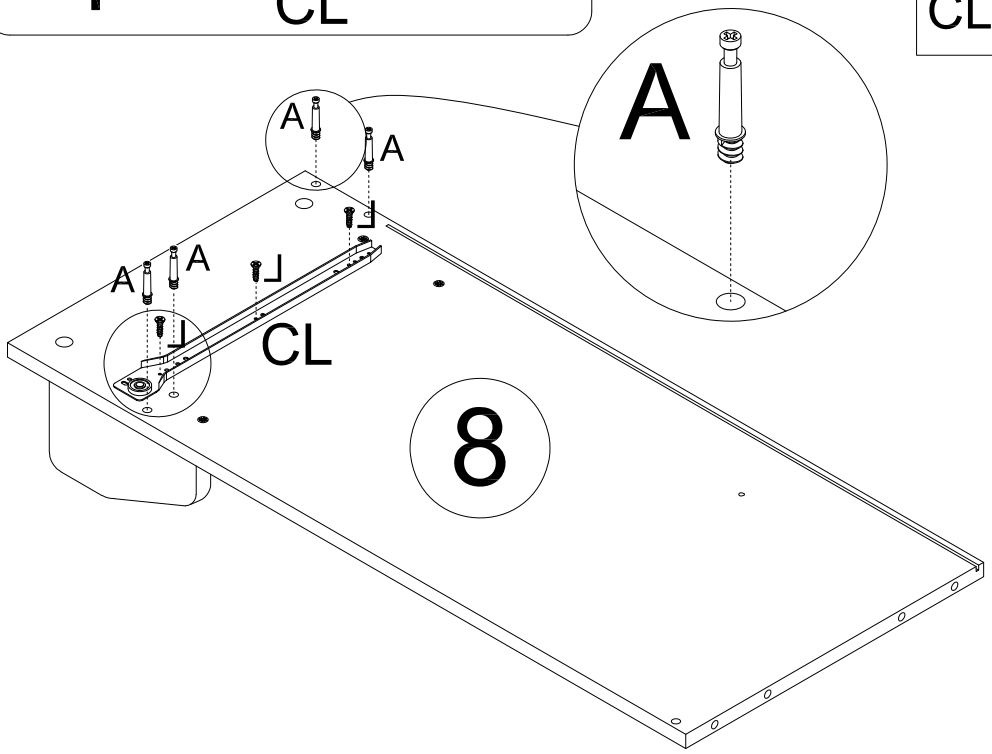


# PRODUCT ASSEMBLY

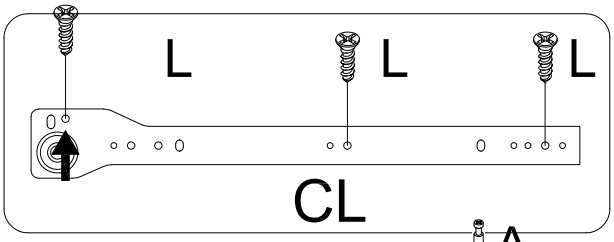
## STEP 3



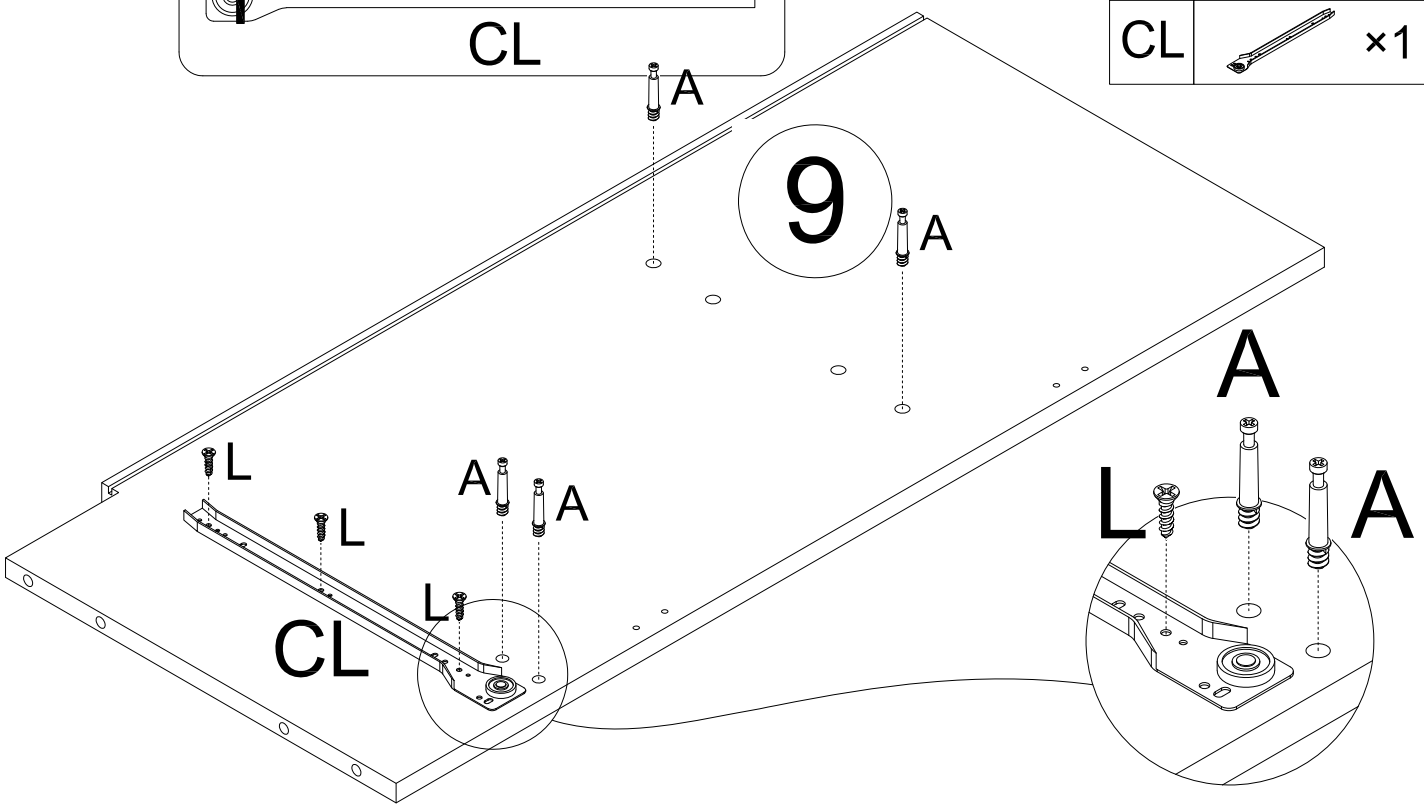

| | | |
|---|---|---|
| A | | ×4 |
| L | | ×3 |
| CL | | ×1 |




## STEP 4

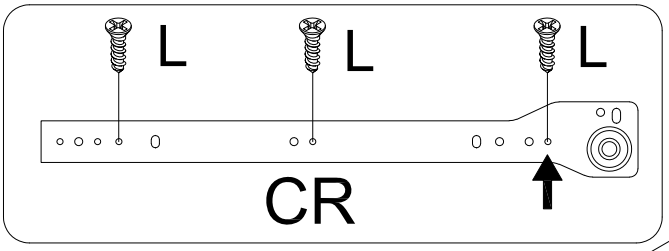



| | | |
|---|---|---|
| A | | ×4 |
| L | | ×3 |
| CL | | ×1 |

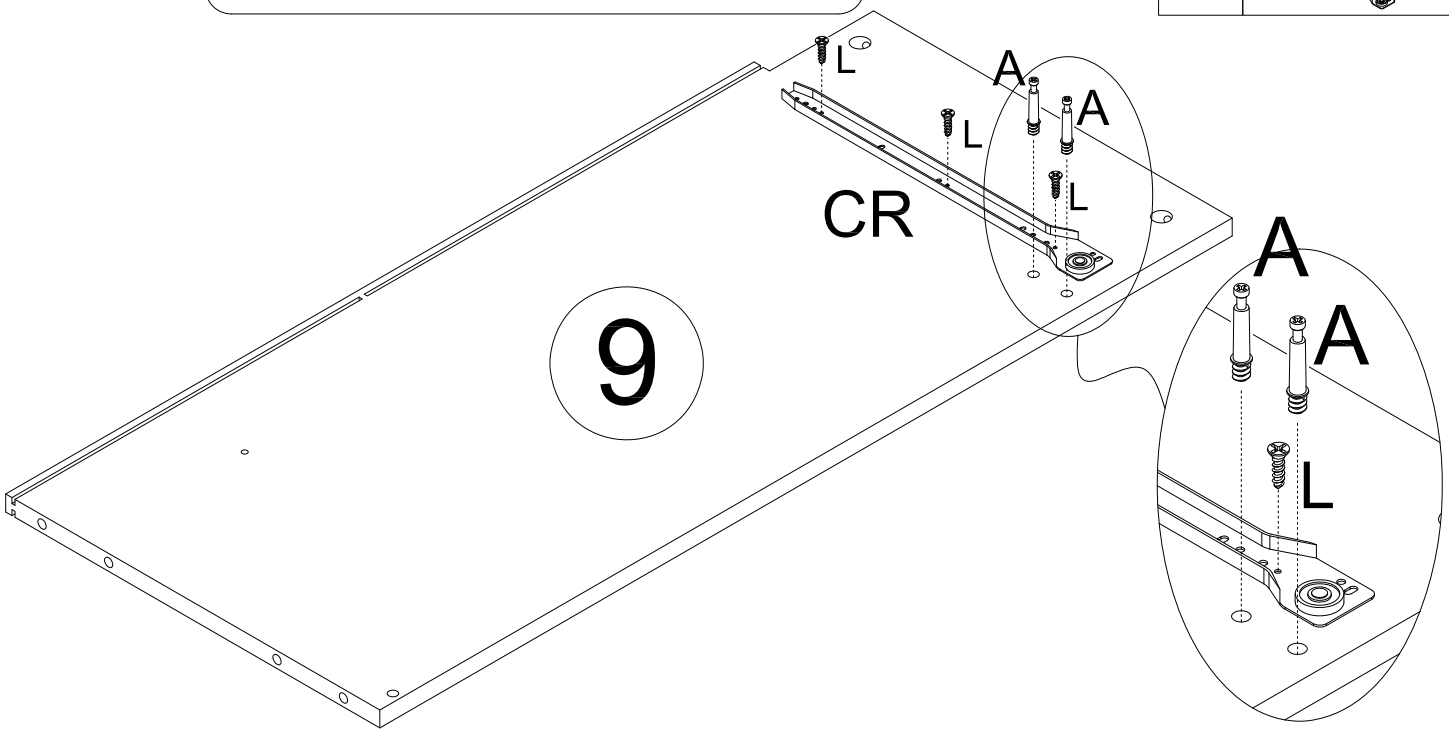


# PRODUCT ASSEMBLY

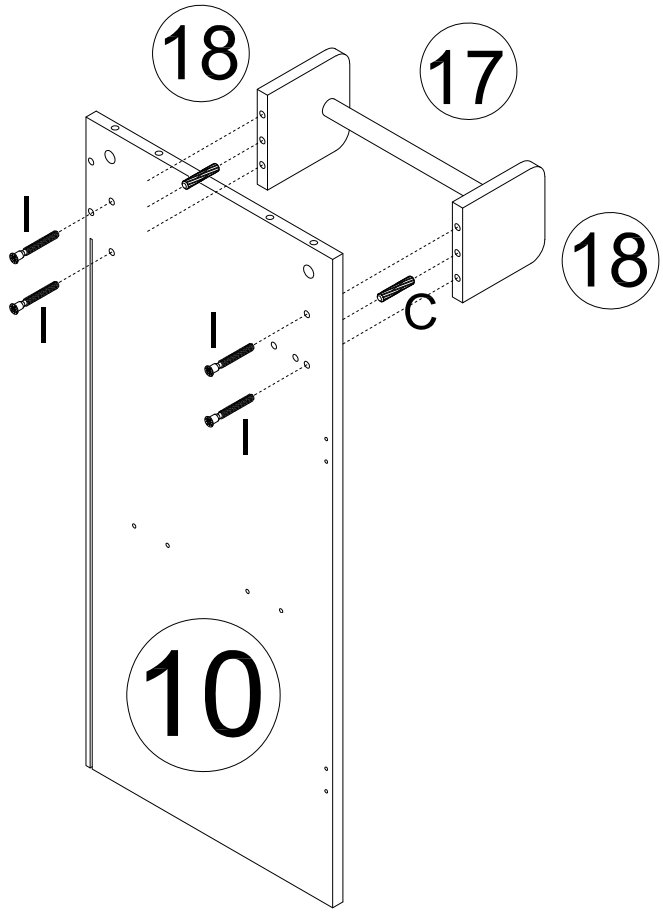
## STEP 5




| | | |
|---|---|---|
| A | | ×2 |
| L | | ×3 |
| CR | | ×1 |



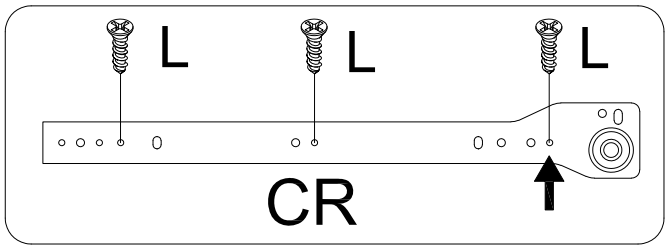

## STEP 6




| | | |
|---|---|---|
| I | | ×4 |
| C | | ×2 |

# PRODUCT ASSEMBLY

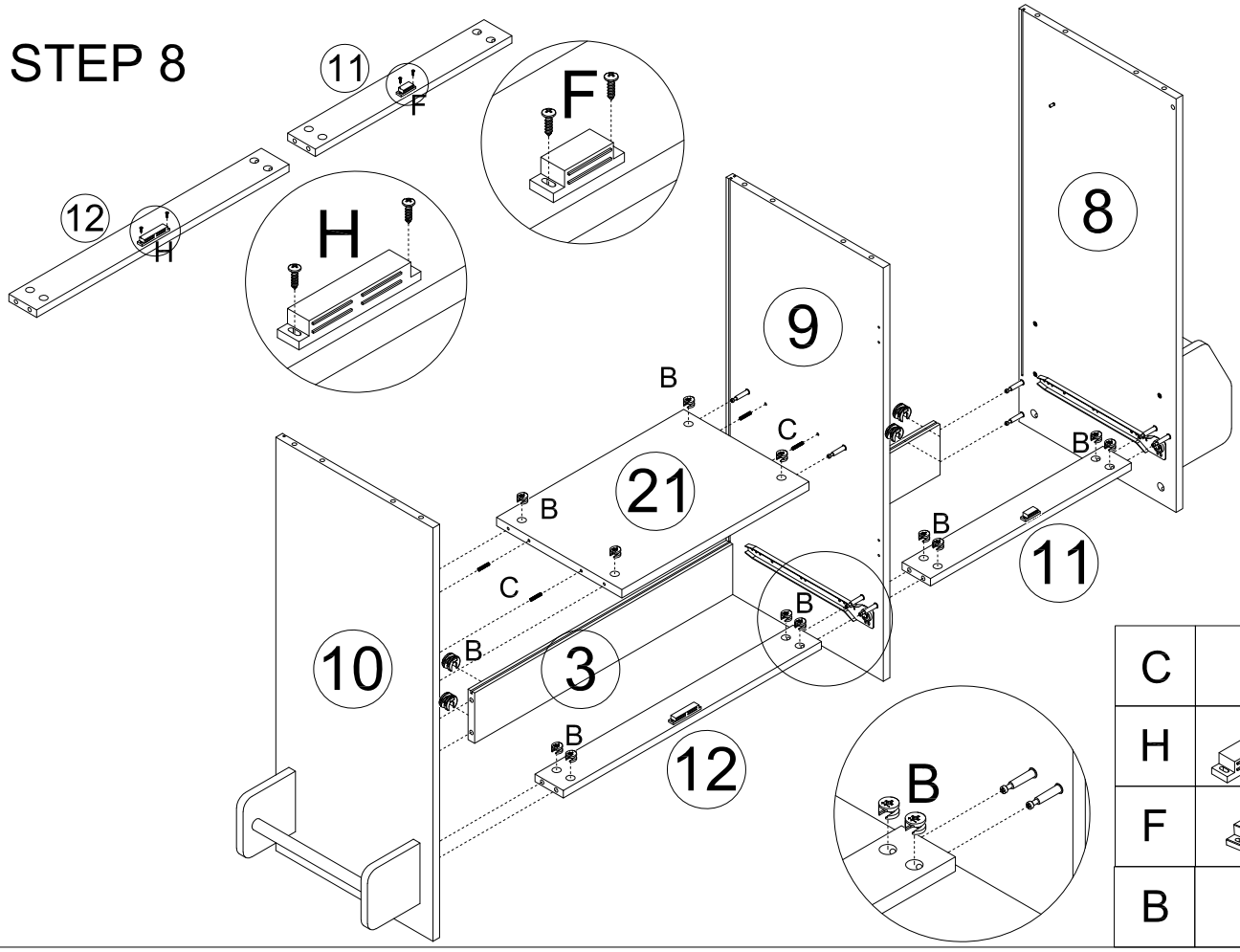
## STEP 7




| | | |
|---|---|---|
| A | | ×6 |
| L | | ×3 |
| CR | | ×1 |



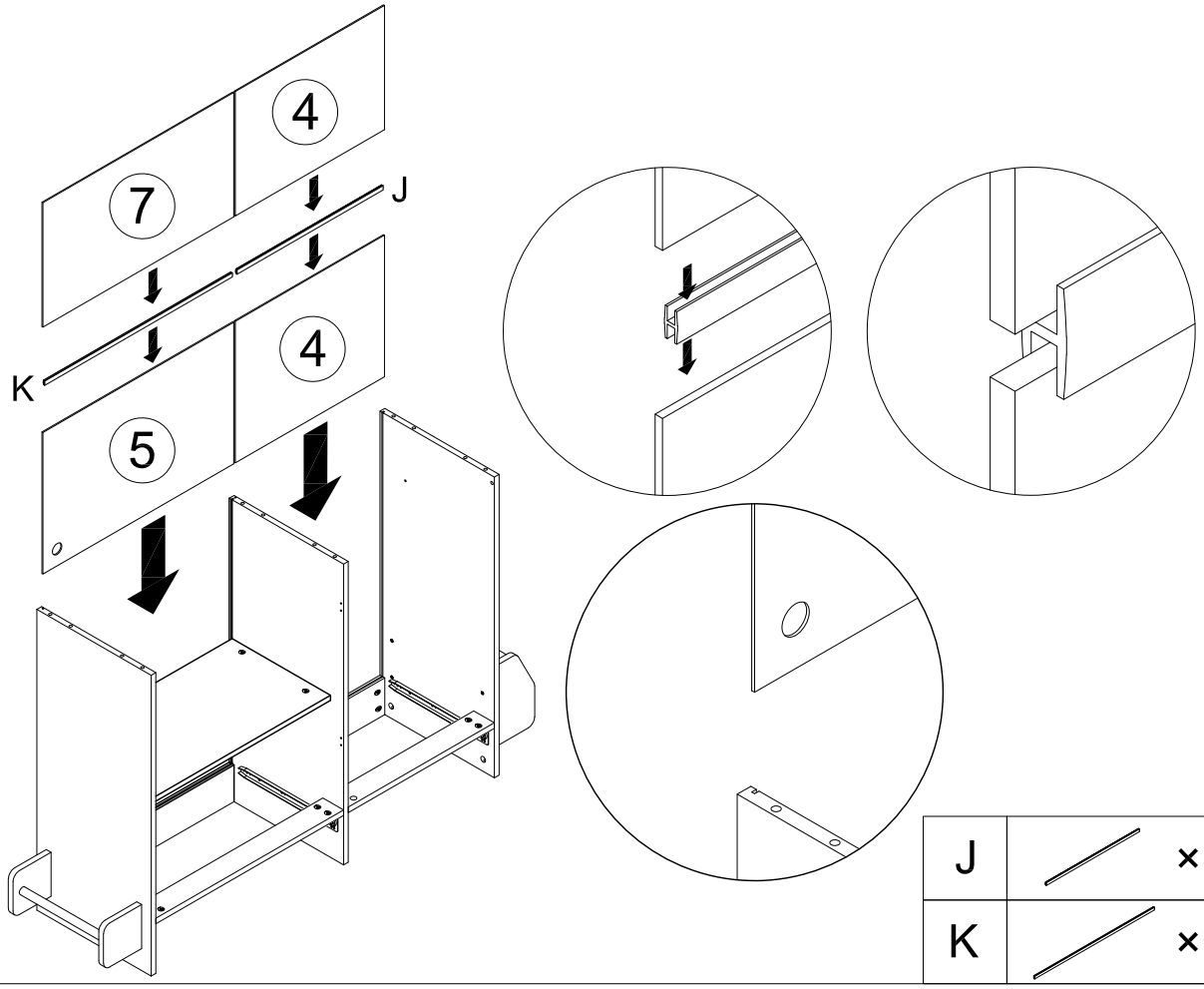

## STEP 8




| | | |
|---|---|---|
| C | | ×4 |
| H | | ×1 |
| F | | ×1 |
| B | | ×16 |

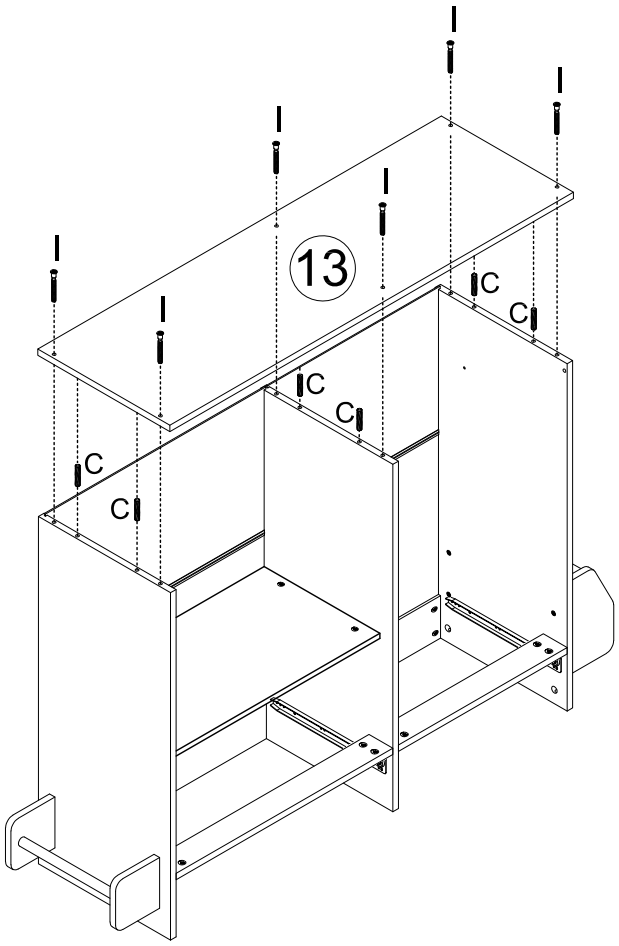
# PRODUCT ASSEMBLY

## STEP 9




| | | |
|---|---|---|
| J | | ×1 |
| K | | ×1 |

## STEP 10

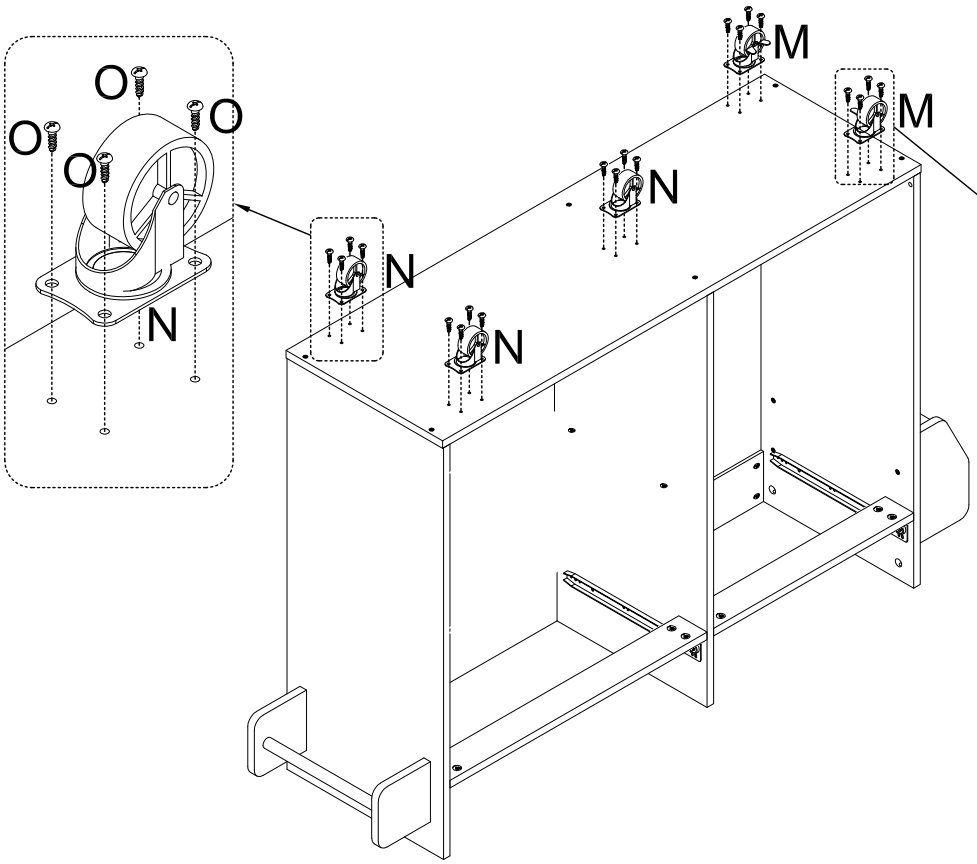



| | | |
|---|---|---|
| C | | ×6 |
| I | | ×6 |

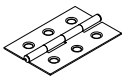
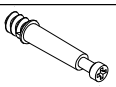
# PRODUCT ASSEMBLY

## STEP 11

| | | |
|---|---|---|
| N |  | ×3 |
| M |  | ×2 |
| O |  | ×20 |

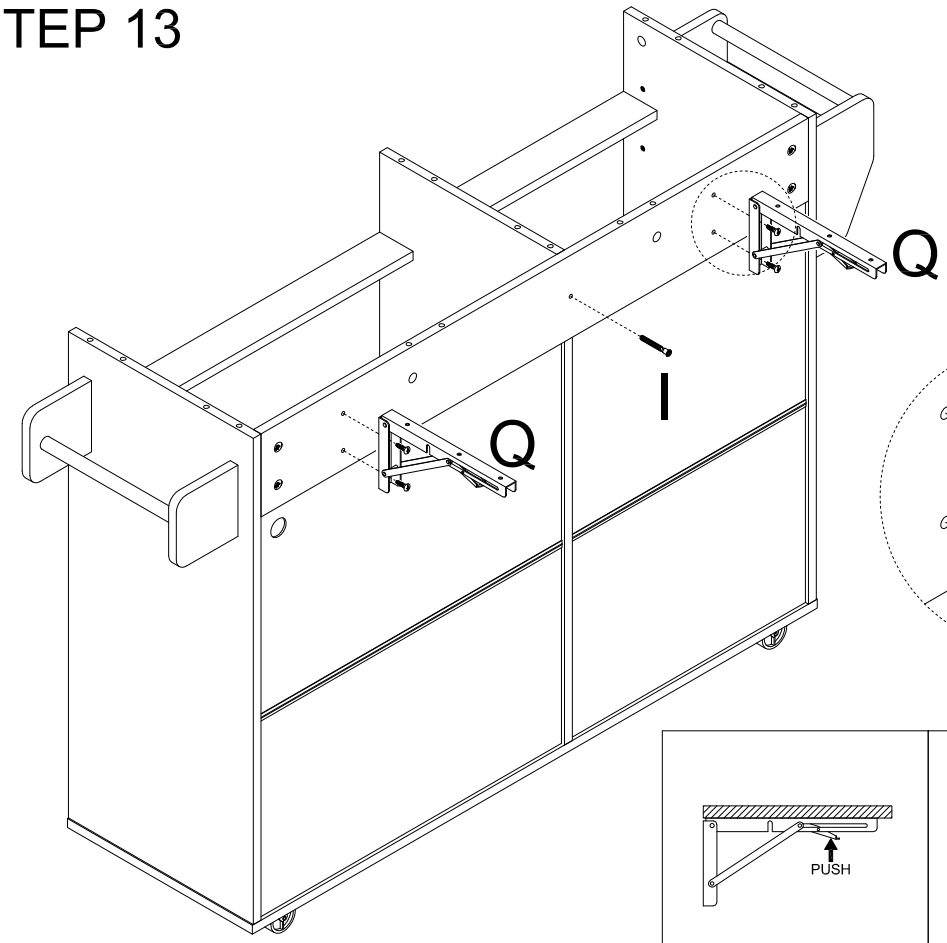



## STEP 12

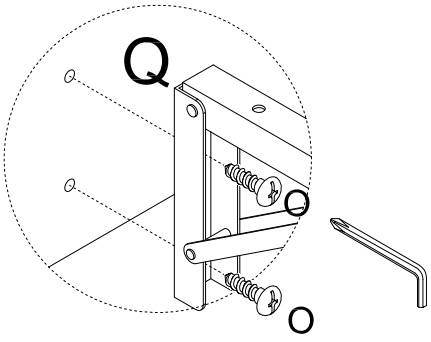
| | | |
|---|---|---|
| L |  | ×18 |
| P |  | ×3 |
| A |  | ×8 |

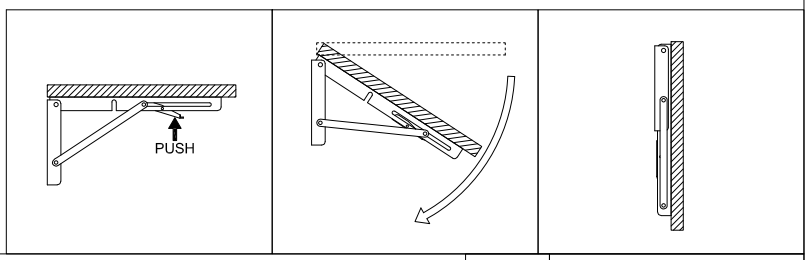
# PRODUCT ASSEMBLY

## STEP 13

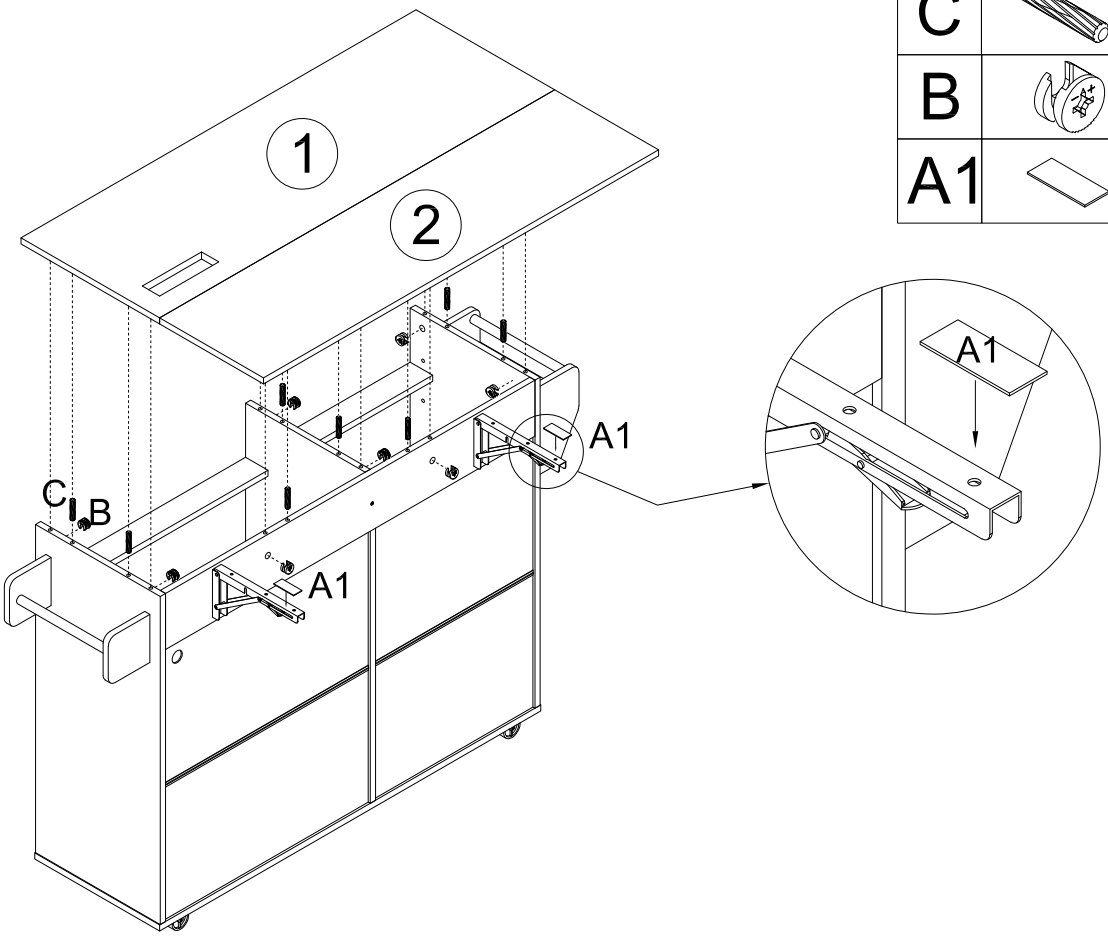



| | |
|---|---|
| Q | ×2 |
| O | ×4 |
| I | ×1 |




## STEP 14

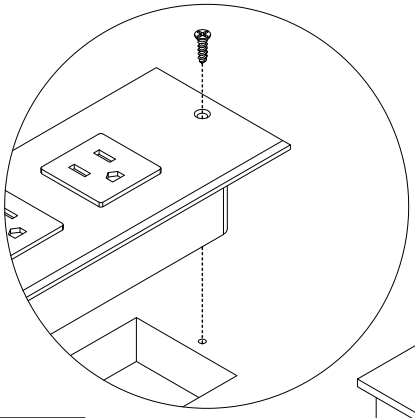


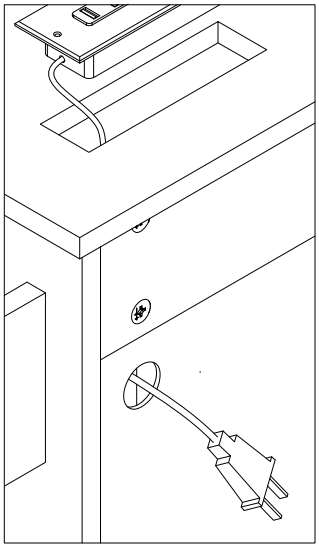

| | |
|---|---|
| C | ×8 |
| B | ×8 |
| A1 | ×2 |

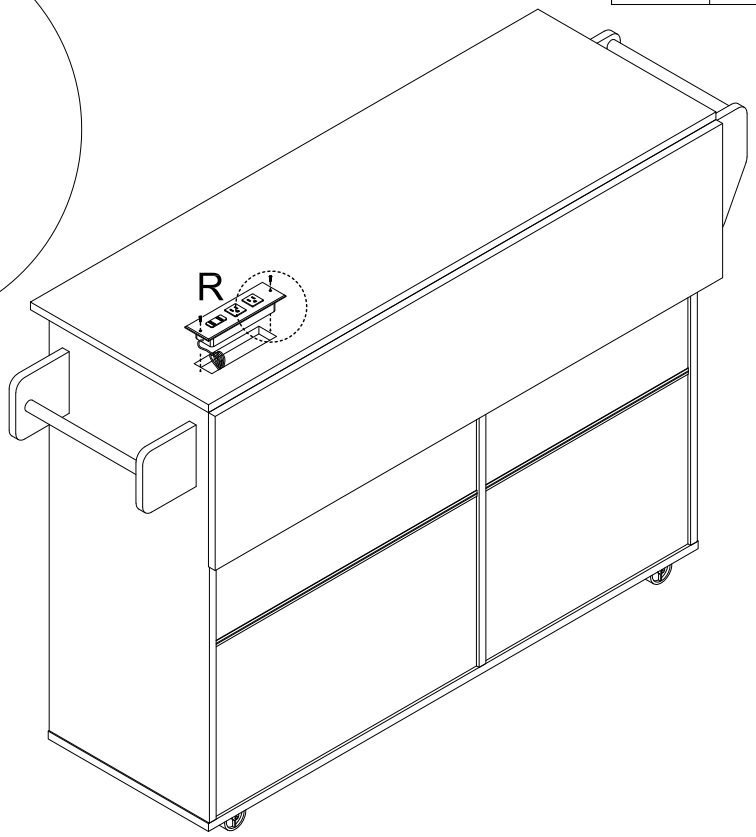
# PRODUCT ASSEMBLY

## STEP 15

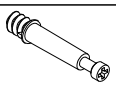
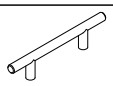
| | | |
|---|---|---|
| R |  | ×1 |

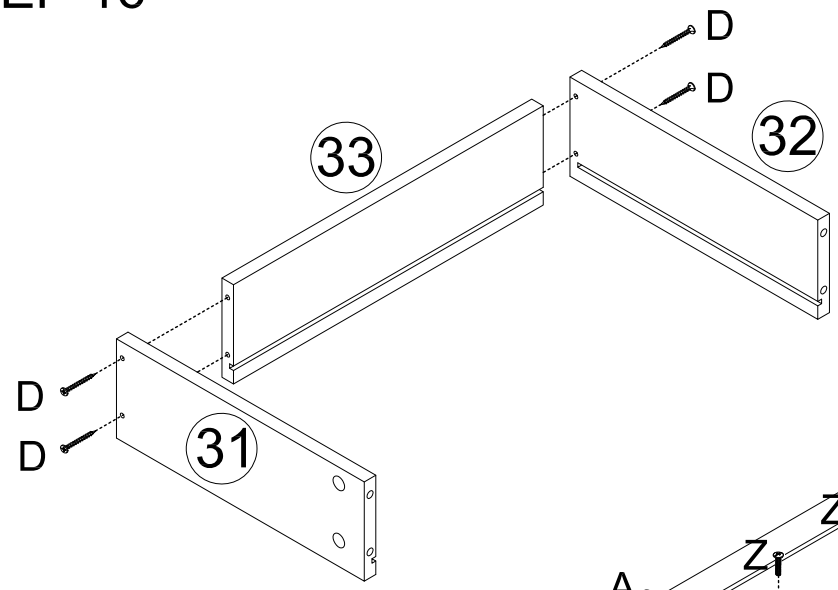


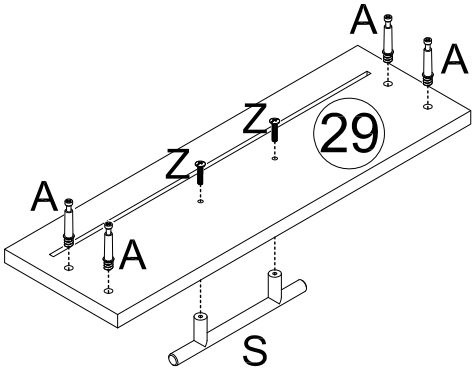





## STEP 16

| | | |
|---|---|---|
| D |  | ×4 |
| A |  | ×4 |
| S |  | ×1 |
| Z |  | ×2 |

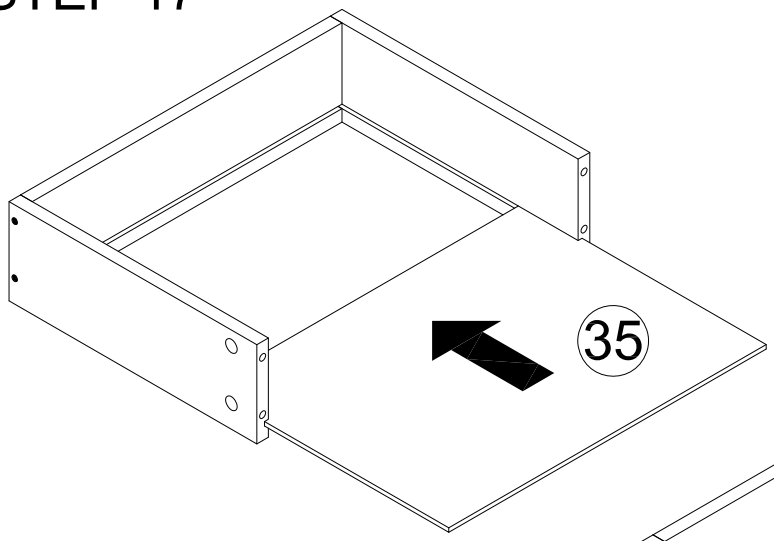


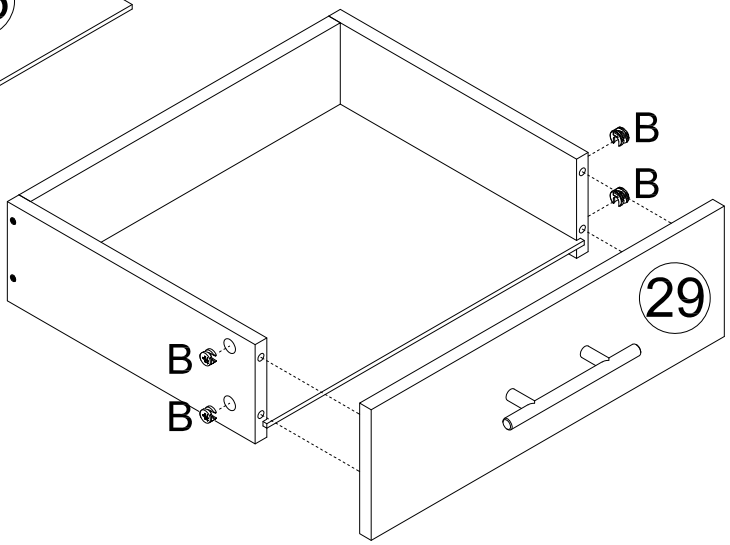



# PRODUCT ASSEMBLY

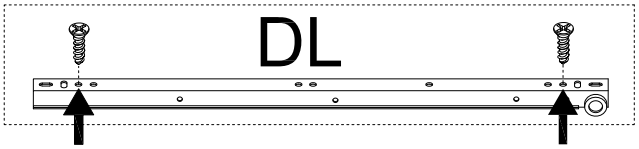
## STEP 17

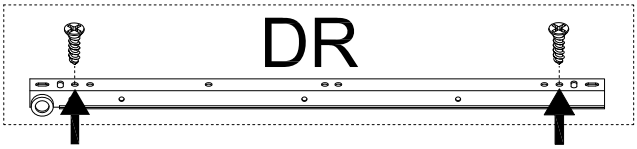
| B |  | ×4 |
|---|---|---|

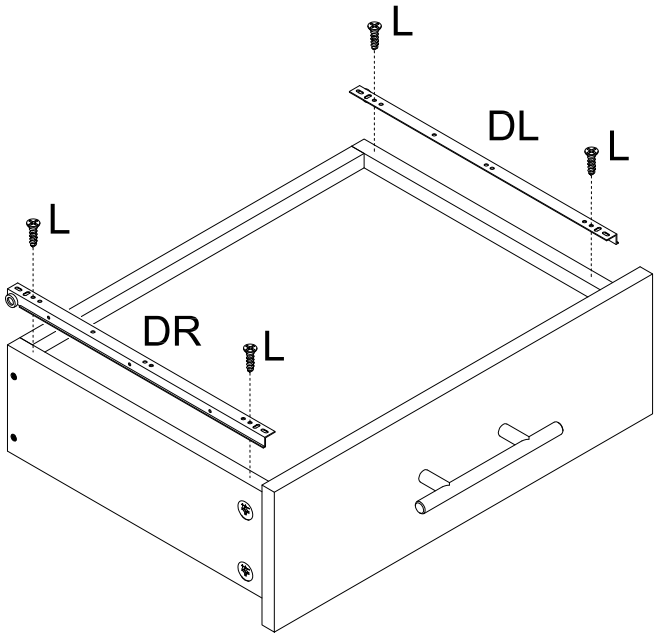


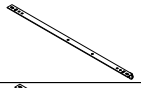
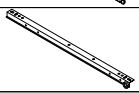




## STEP 18



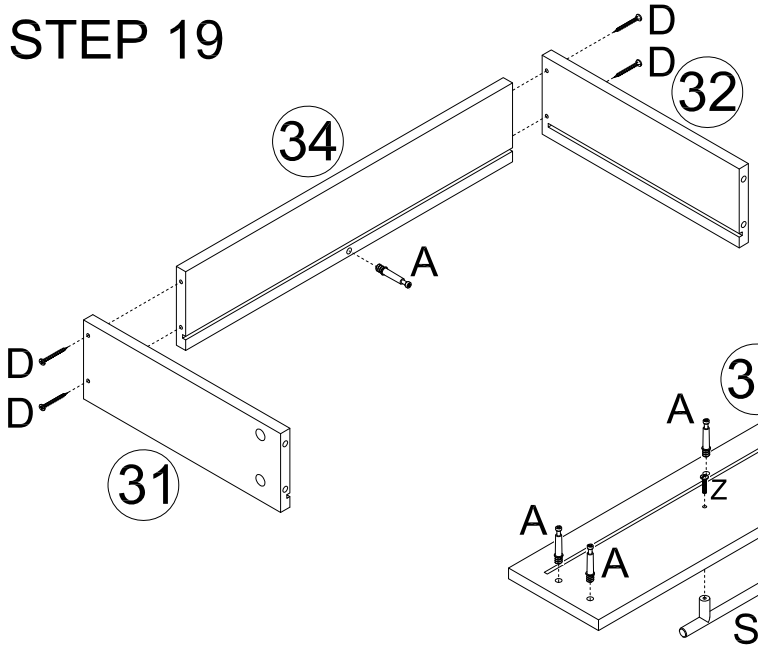




| DL |  | ×1 |
|---|---|---|
| DR |  | ×1 |
| L |  | ×4 |

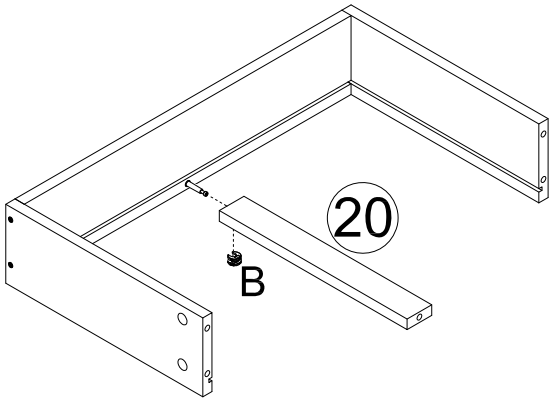
# PRODUCT ASSEMBLY

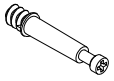
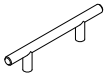
## STEP 19





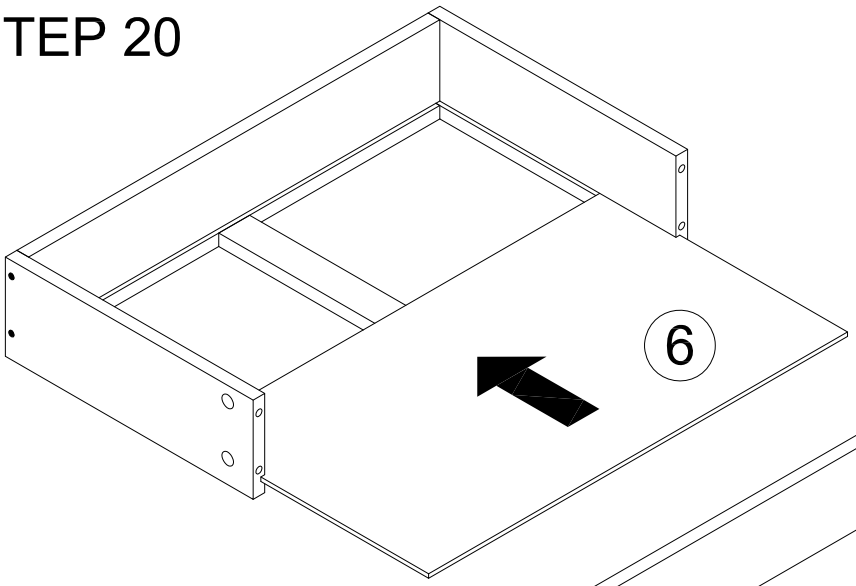


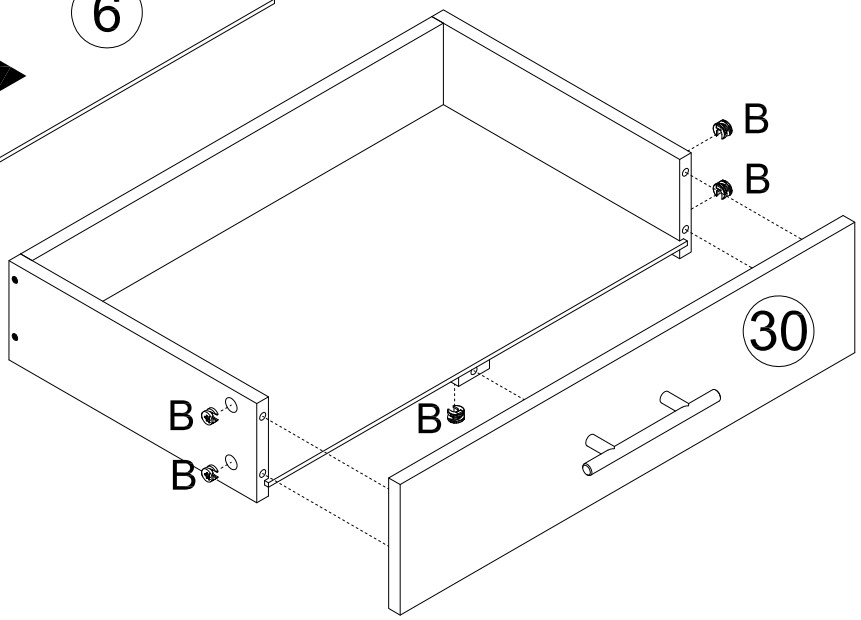



| | | |
|---|---|---|
| D |  | ×4 |
| A |  | ×6 |
| S |  | ×1 |
| B |  | ×1 |
| Z |  | ×2 |

## STEP 20

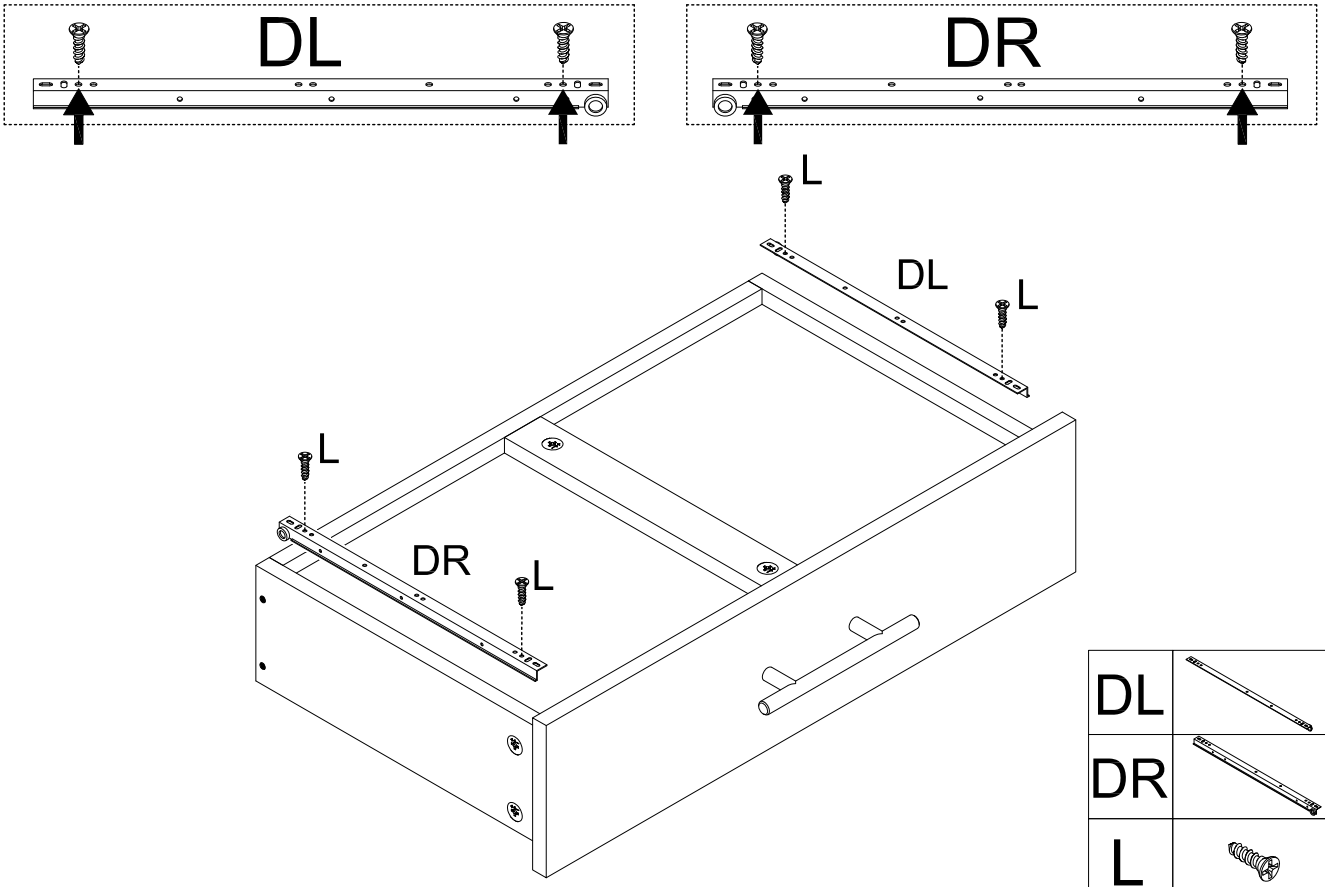
| | | |
|---|---|---|
| B |  | ×5 |



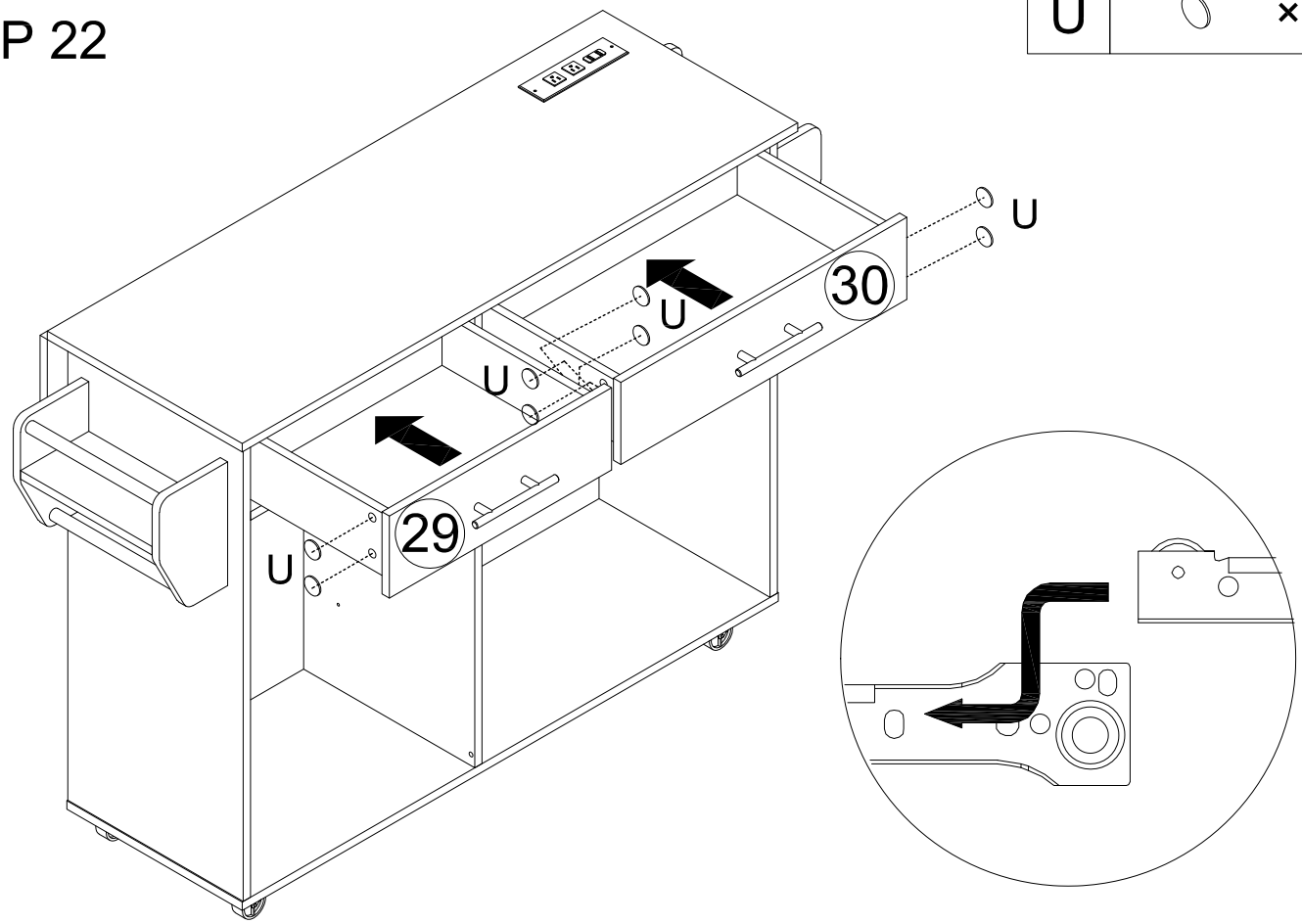
# PRODUCT ASSEMBLY

## STEP 21



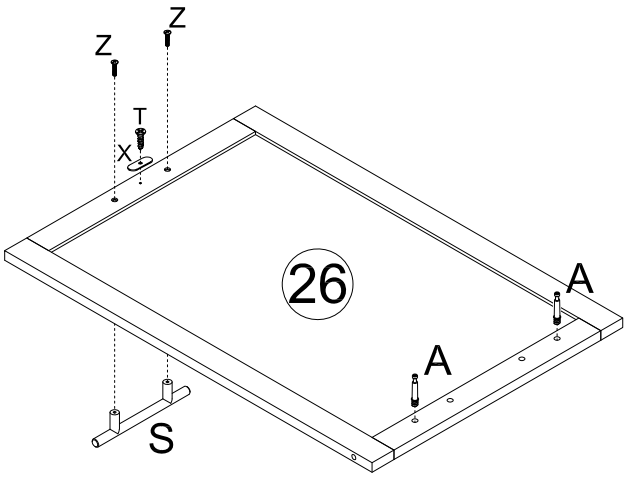

| | | |
|---|---|---|
| DL | | ×1 |
| DR | | ×1 |
| L | | ×4 |
| U | | ×8 |

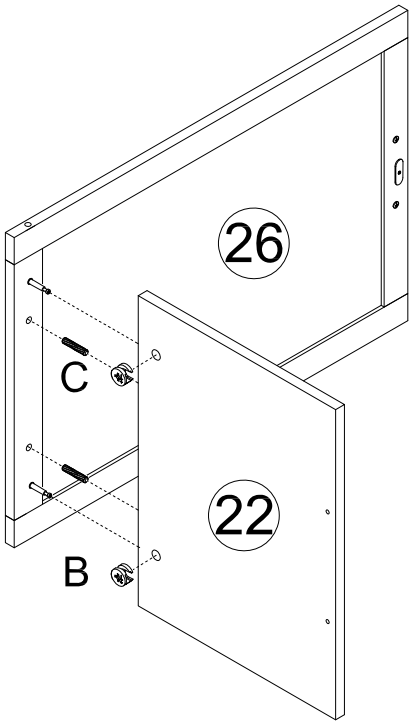
## STEP 22



# PRODUCT ASSEMBLY

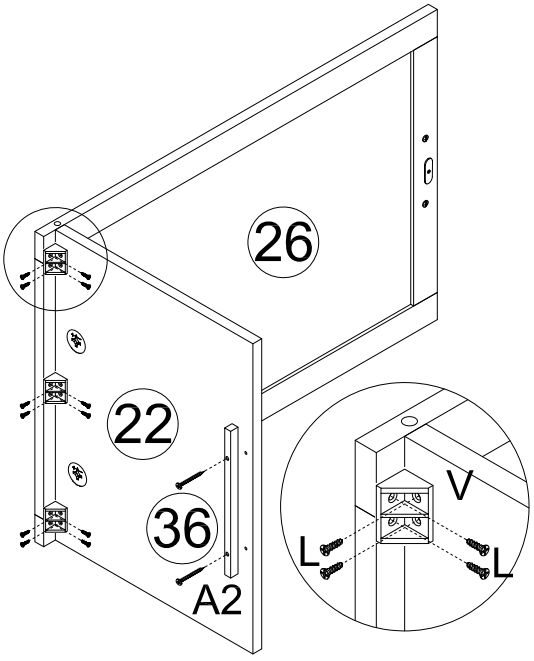
## STEP 23

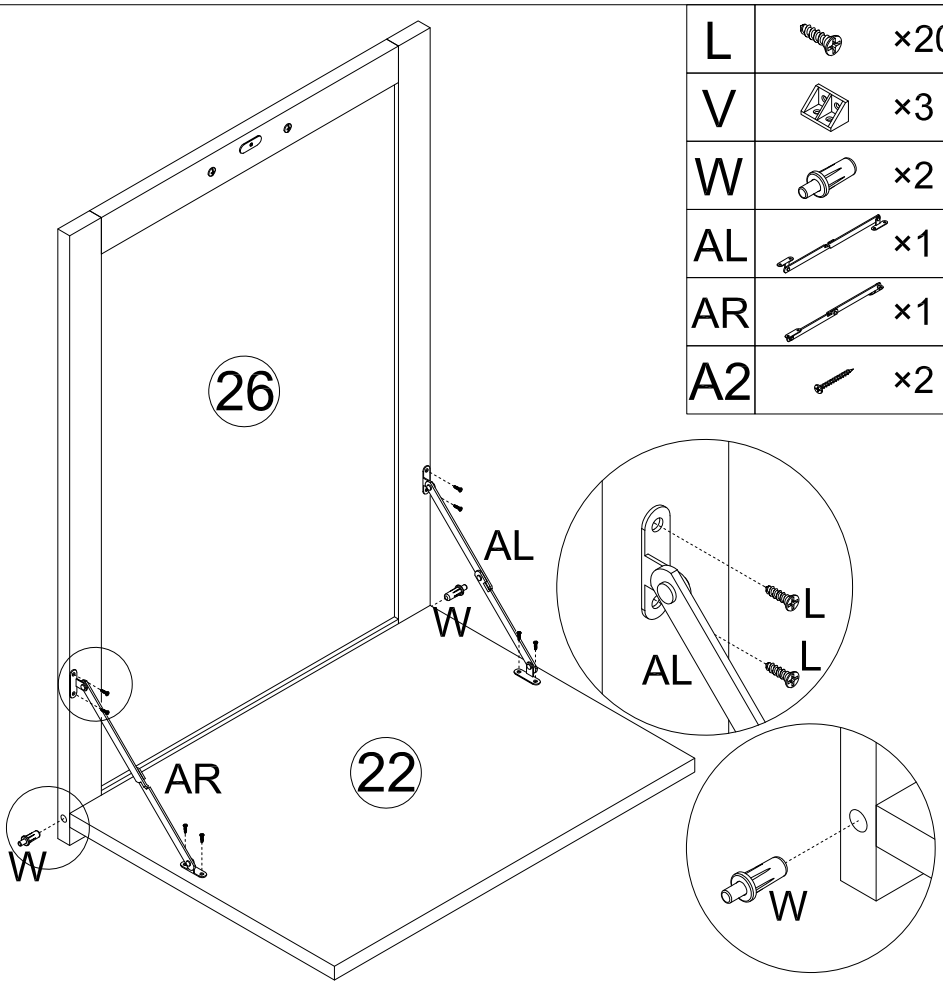



| | | |
|---|---|---|
| S | | ×1 |
| B | | ×2 |
| C | | ×2 |
| X | | ×1 |
| T | | ×1 |
| Z | | ×2 |
| A | | ×2 |

## STEP 24

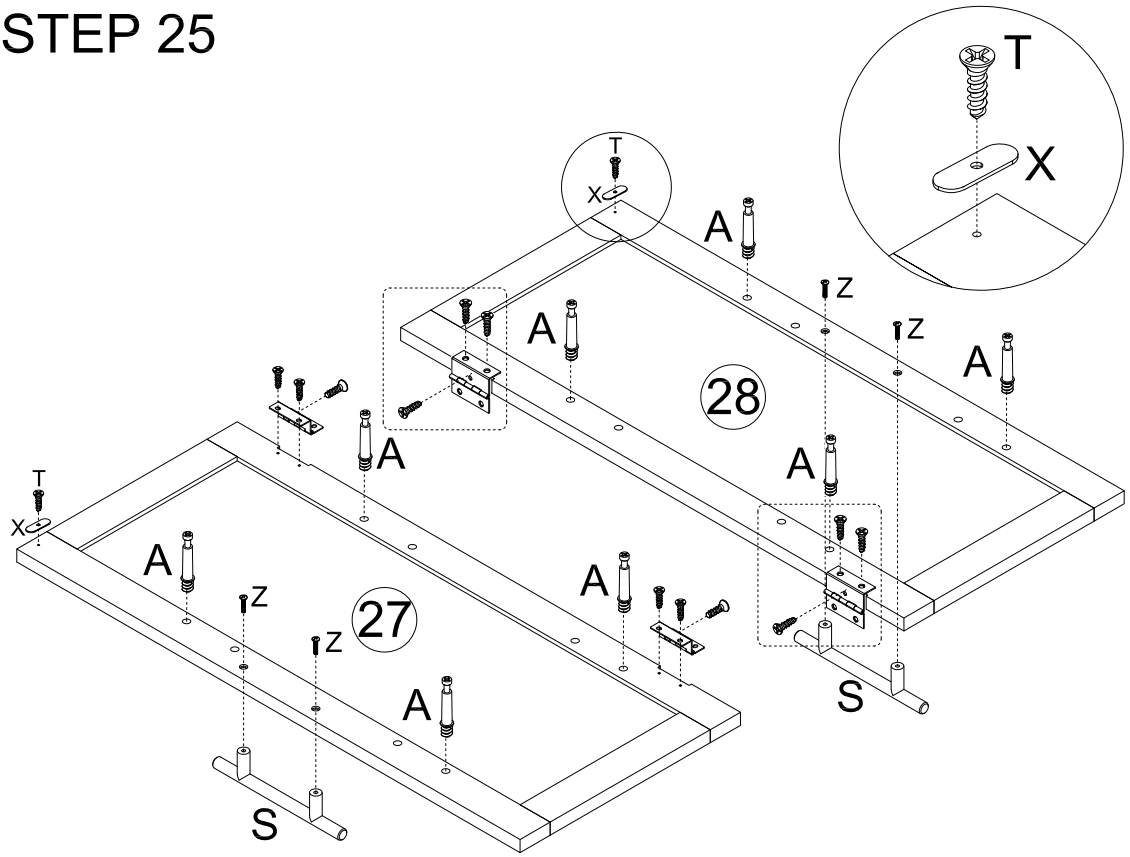


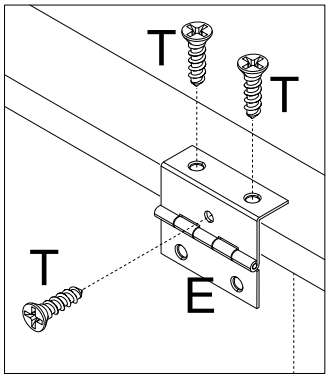

| | | |
|---|---|---|
| L | | ×20 |
| V | | ×3 |
| W | | ×2 |
| AL | | ×1 |
| AR | | ×1 |
| A2 | | ×2 |

# PRODUCT ASSEMBLY

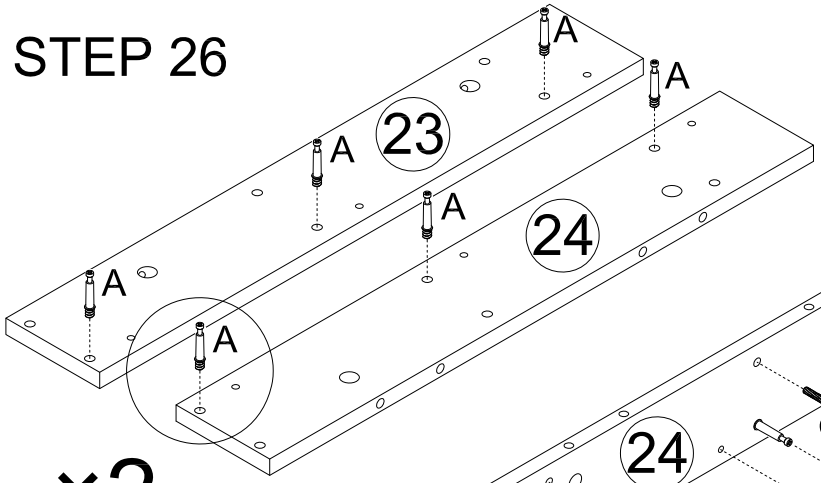
## STEP 25



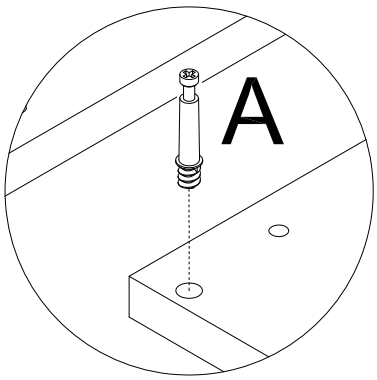

| | | |
|---|---|---|
| A | | ×8 |
| S | | ×2 |
| X | | ×2 |
| T | | ×14 |
| E | | ×4 |
| Z | | ×4 |

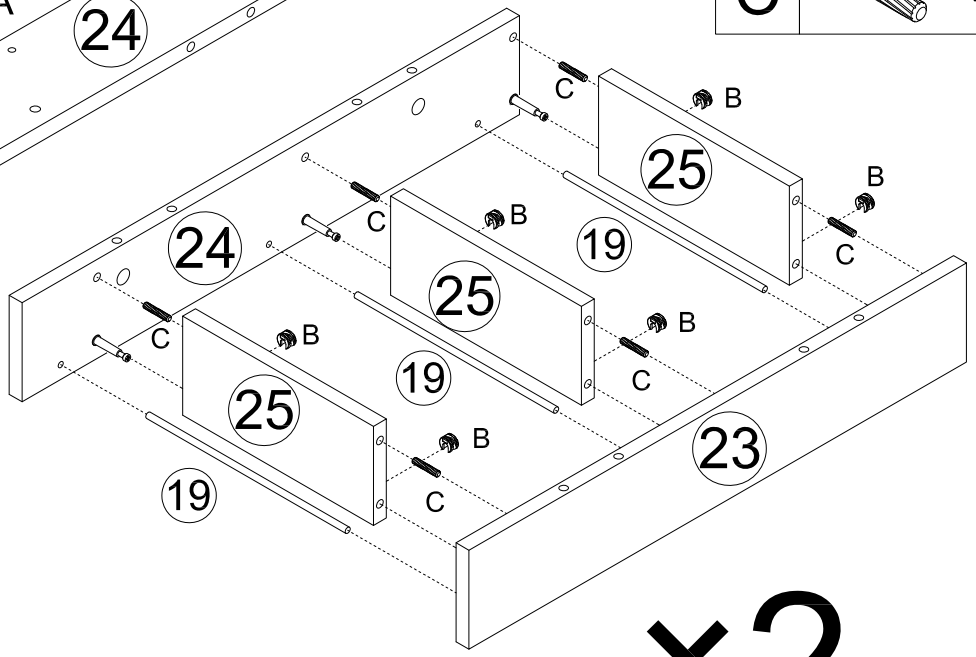



## STEP 26




×2



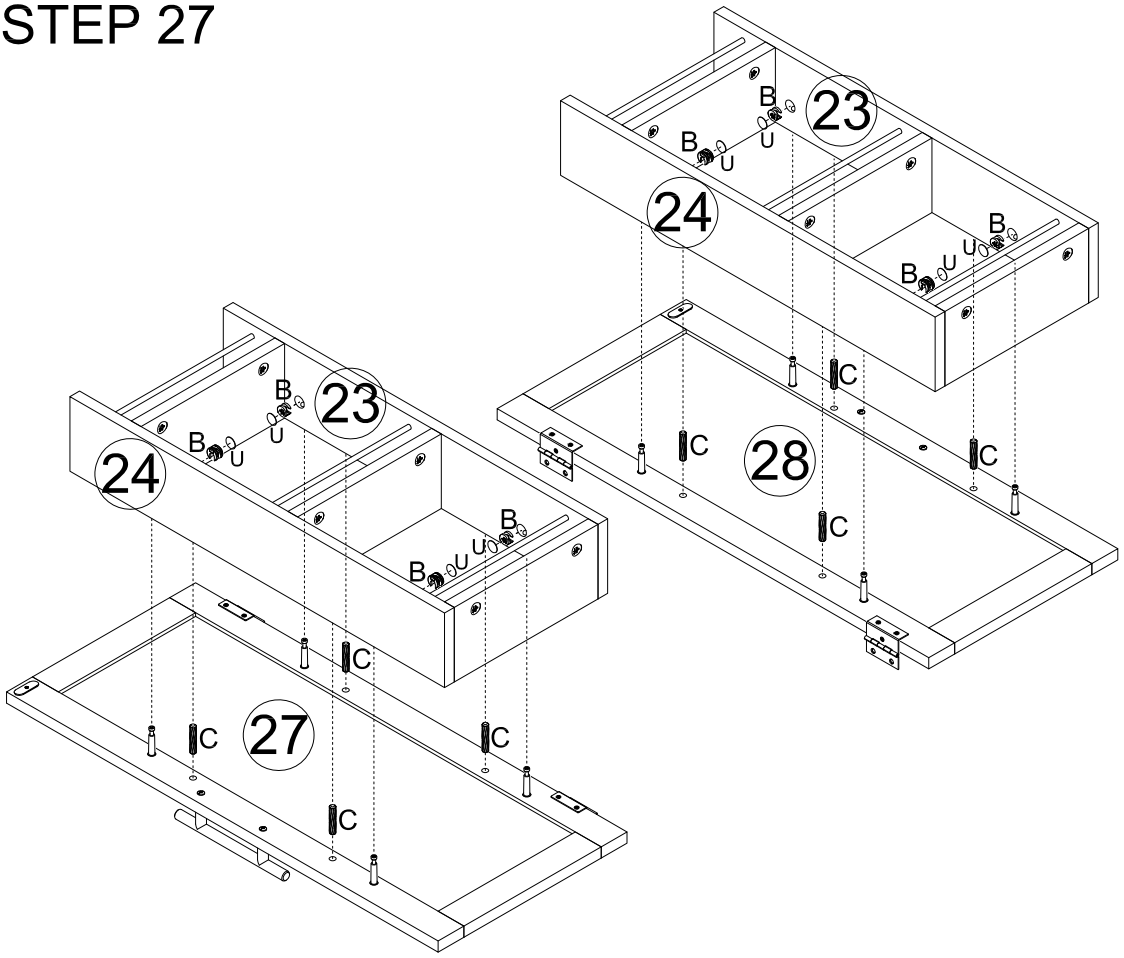




×2

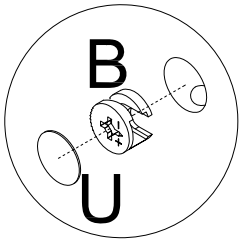
| | | |
|---|---|---|
| A | | ×12 |
| B | | ×12 |
| C | | ×12 |

# PRODUCT ASSEMBLY

## STEP 27




| | | |
|---|---|---|
| B |  | ×8 |
| C |  | ×8 |
| U |  | ×8 |



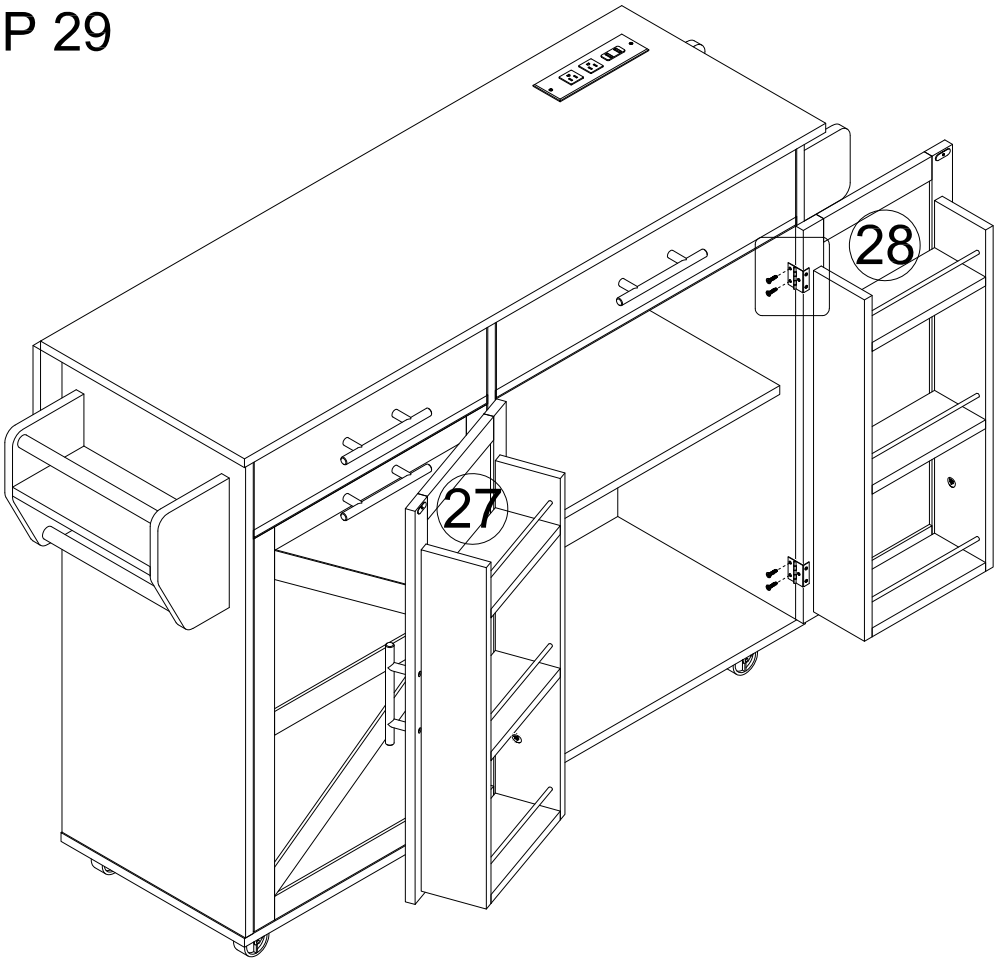

## STEP 28

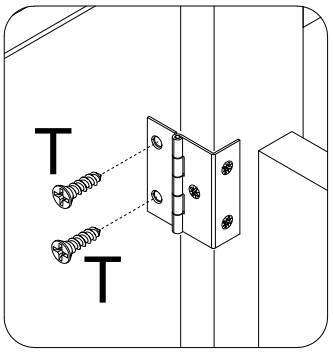
| | | |
|---|---|---|
| G |  | ×2 |

# PRODUCT ASSEMBLY

## STEP 29

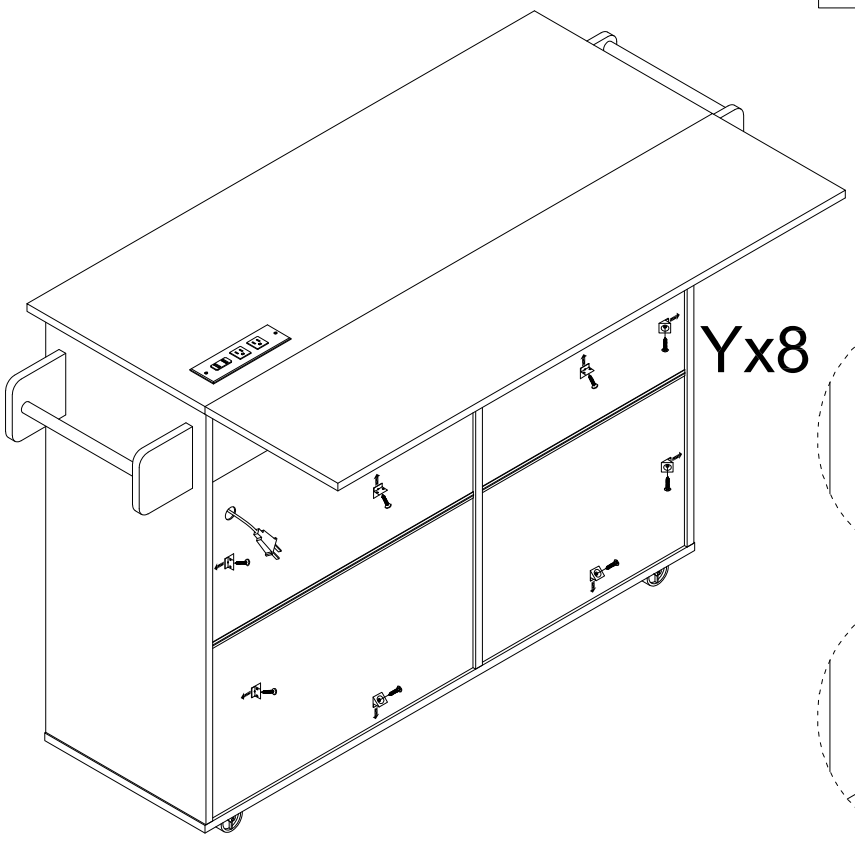
| T | ×8 |
|---|---|

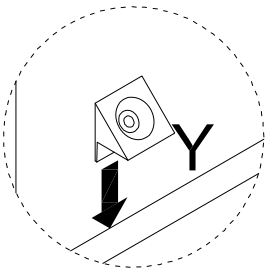


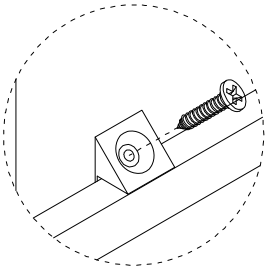




## STEP 30

| Y | ×8 |
|---|---|



# A Guide to Wall Mounting & Fixings

## Important note:

If plastic wall plugs (rawl plugs) are supplied with your product, eg:



- these are suitable for use in masonry walls

If you are in any doubt about the correct wall plugs for your wall, seek professional advice.

Failure of the product due to using the incorrect fixings is the responsibility of the installer.

## Important: when drilling into walls always check that there are no hidden wires or pipes etc.

Make sure that the screws and wall plugs being used are suitable for supporting your unit. Consult a qualified tradesperson if you are unsure.

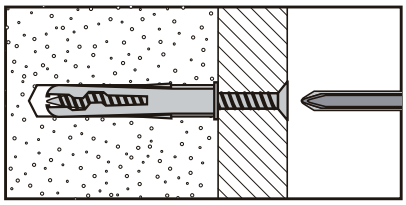
**Hints:**

1. General rule: always use a larger screw and wall plug if you are not sure.
2. Ensure you use the recommended drill bit to match the wall plug and hole size.
3. Ensure you drill the hole horizontally; do not force the drill or enlarge the hole.
4. Take extra care when drilling high walls, ceilings and ceramic tiles. Ensure wall plugs are inserted beyond the thickness of the ceramic tiles to avoid the tiles splitting or cracking.
5. Ensure wall plugs are well fitted and are a tight fit in the drilled hole.

## Types of walls

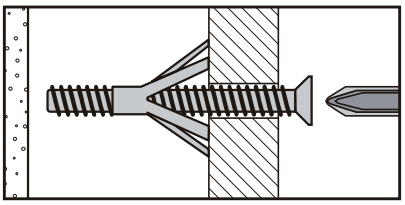
You can use one of the following types of wall plug if your walls are made of brick, breeze block, concrete, stone or wood.

No. 1 “General Purpose” wall plug



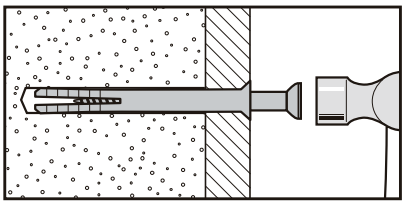
Generally aerated blocks should not be used to support heavy loads, use a specialist fitting in this case. For light loads, general purpose wall plugs can be used.

No. 3 “Cavity Fixing” wall plug



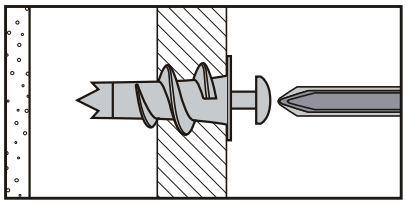
For use with plasterboard partitions or hollow wooden doors.

No. 5 “Hammer Fixing” wall plug



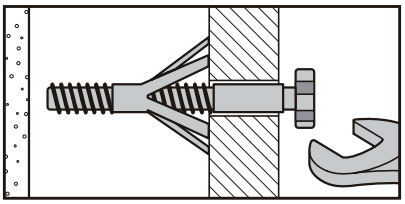
For use with walls stuck with plasterboard. The hammer fixing allows it to be fixed to the wall rather than the plasterboard. Always check the fixing is secure to the retaining wall.

No. 2 “Plasterboard” wall plug



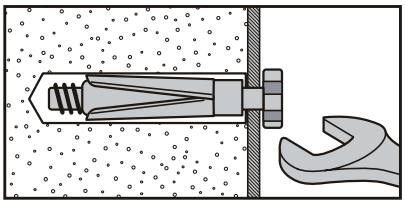
For use when attaching light loads onto plasterboard partitions.

No. 4 “Cavity Fixing - Heavy Duty” wall plug



For use when fitting or supporting heavy loads such as shelving, wall cabinets and coat racks.

No. 6 “Shield Anchor” wall plug - heavy loads



For use with heavier loads such as TV and HiFi speakers and satelite dishes etc.

## Care & Maintenance

Safety: Always check the fitting and location to ensure your safety in and around the home.

Fitting: From time to time check the fitting to ensure the wall plugs or screws do not become loose.