ASSEMBLY INSTRUCTION

Chaise Lounger

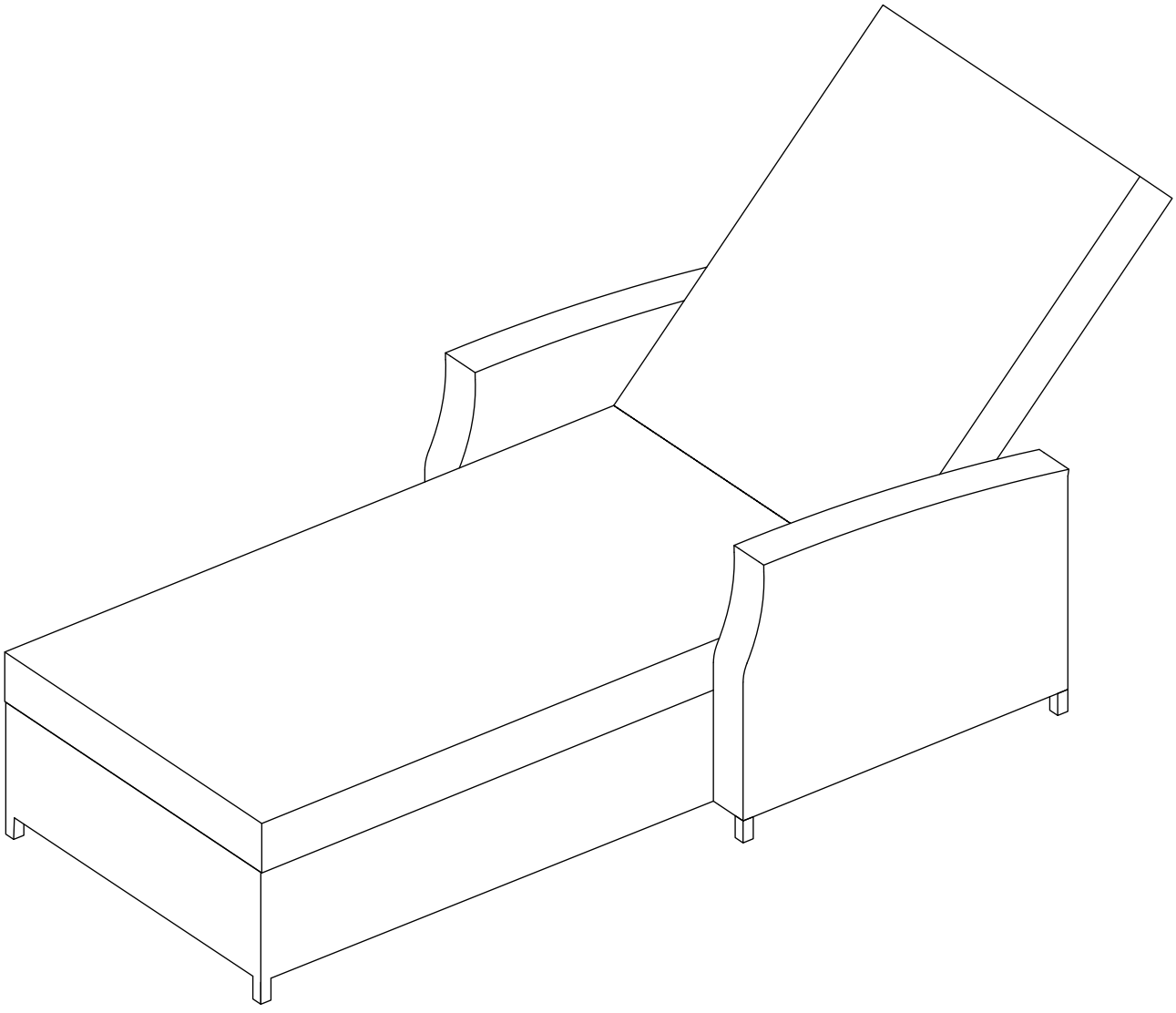

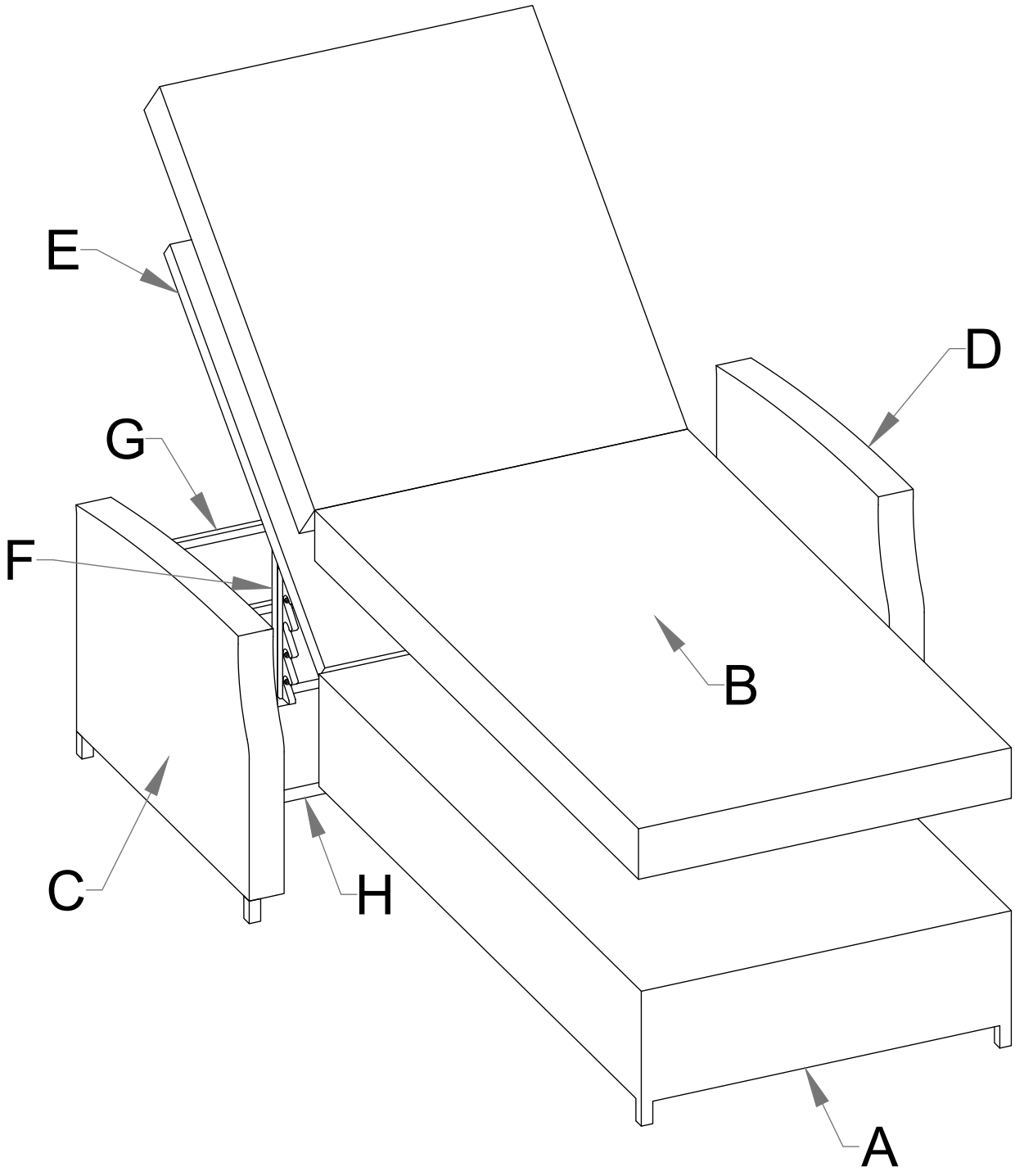

Note:

1. 50% Tighten before fixing all screws, Allen wrench is recommended instead of an electric drill.
2. Place the item on a flat ground to adjust and make sure it remains stable.
3. Tighten up all screw with tools gradually.
4. If screw are not aligned with holes during assembly, please loosen all the other screws to 50% and continue the assembly process.
5. If the item is not stable, please loosen all screws, adjust it on a flat ground and tighten up all screws again.
6. Note: If one or some screws are fully tighten during assembly, chances are the others will not be aligned with holes. In addition, all the holes are designed to be relatively larger to provide more space for the adjustment of the screws.

Part List:

A Seat Chaise Frame (1pc)

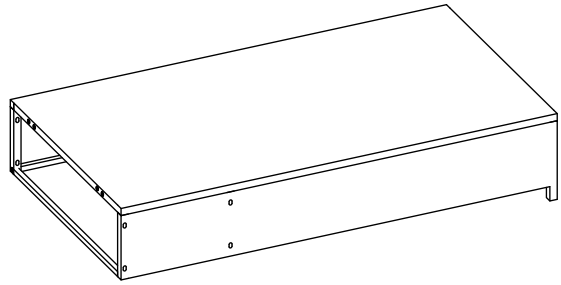

B Chaise Cushion (1pc)

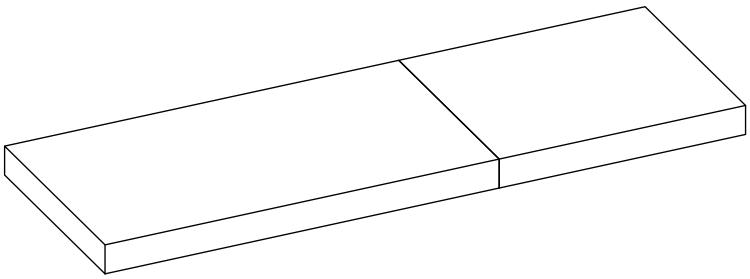

C Right Armrest Frame (1pc)

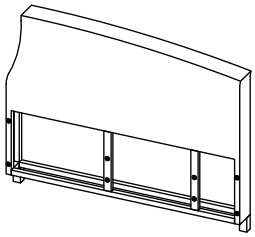

D Left Armrest Frame (1pc)

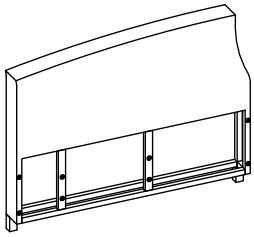

E Back Chaise Frame (1pc)

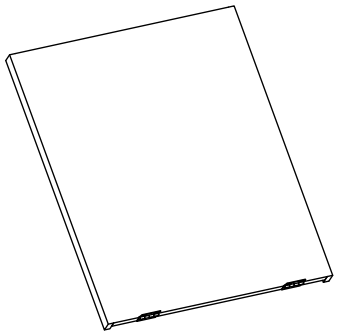

F Support Back Frame (1pc)

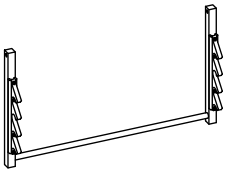

G Behind Frame (1pc)

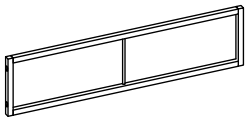

H Support Armrest Frame (1pc)

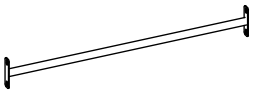

Hardware List:

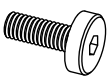

Bolt Ø6x20mm

1 x8+1

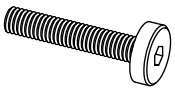

Bolt Ø6x35mm

2 x6+1

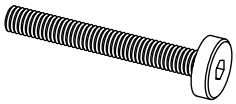

Bolt Ø6x50mm

3 x8+1



Nut Ø6

4 x2+1

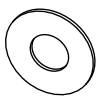

Flat Washer

5 x24+2

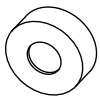

Washer 5mm

6 x2+1

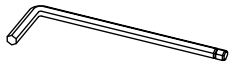

Allen Key

7 x1

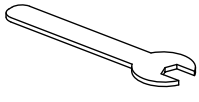

Key

8 x1

Step 1:

E x1
F x1

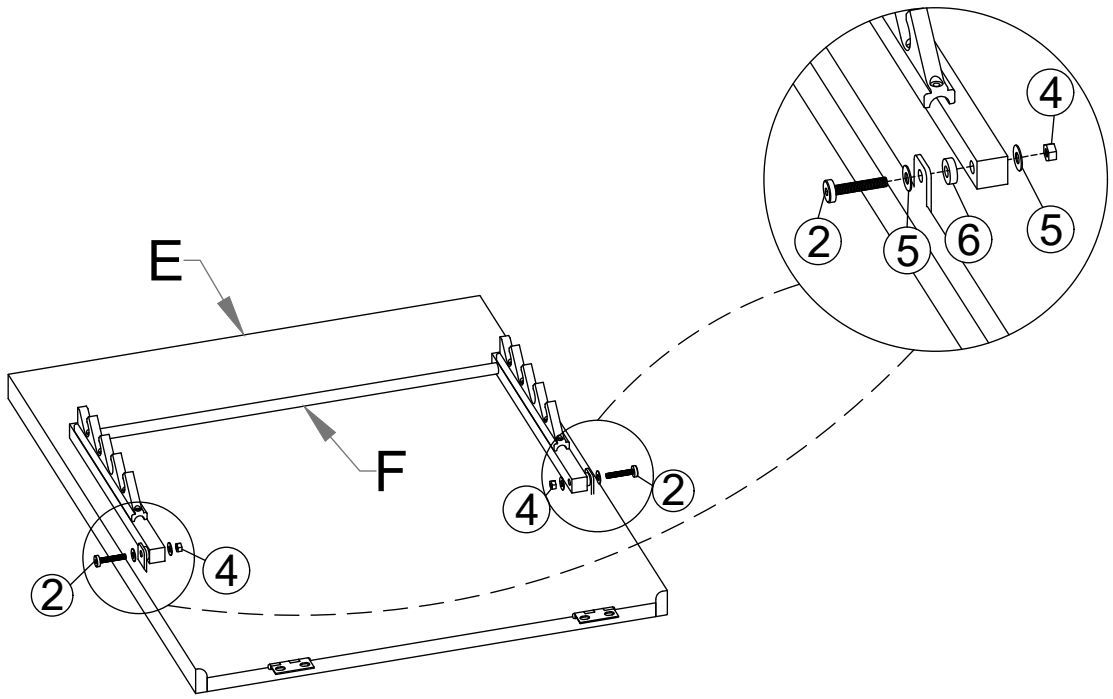

Bolt Ø6x35mm	Flat Washer	Washer 5mm	Nut Ø6	Key	100%
2 x2	5 x4	6 x2	4 x2	8 x1	

Connect Back Chaise Frame (E) & Support Back Frame (F), tighten Bolt (2), Flat Washer (5), Washer (6), Nut (4) with Allen Key (7) & Key (8).

Step 2:

A x1
C x1

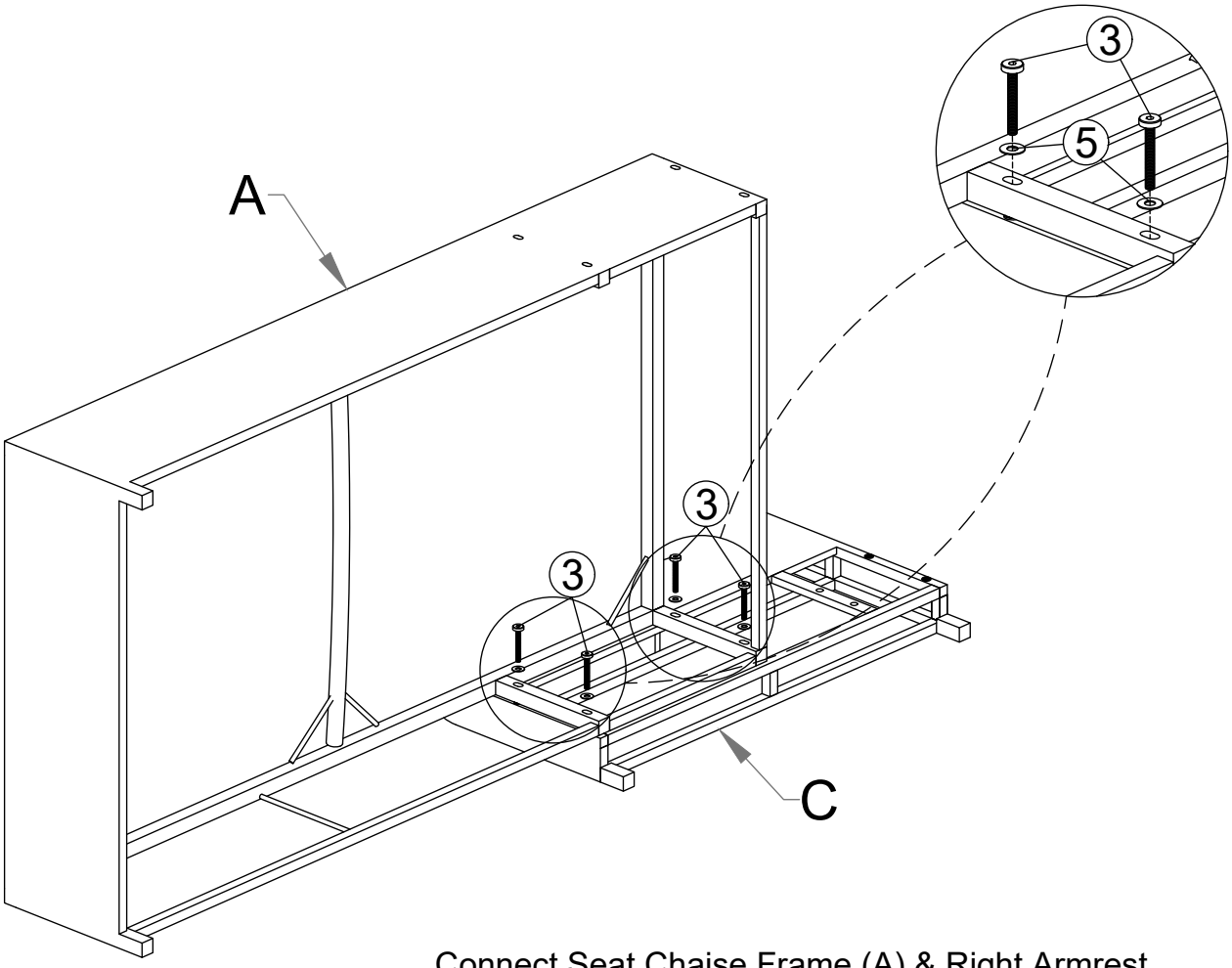

Bolt Ø6x50mm	Flat Washer	75%
3 x4	5 x4	

Connect Seat Chaise Frame (A) & Right Armrest Frame (C), tighten Bolt (3), Flat Washer (5) with Allen Key (7).

Step 3:

H x1

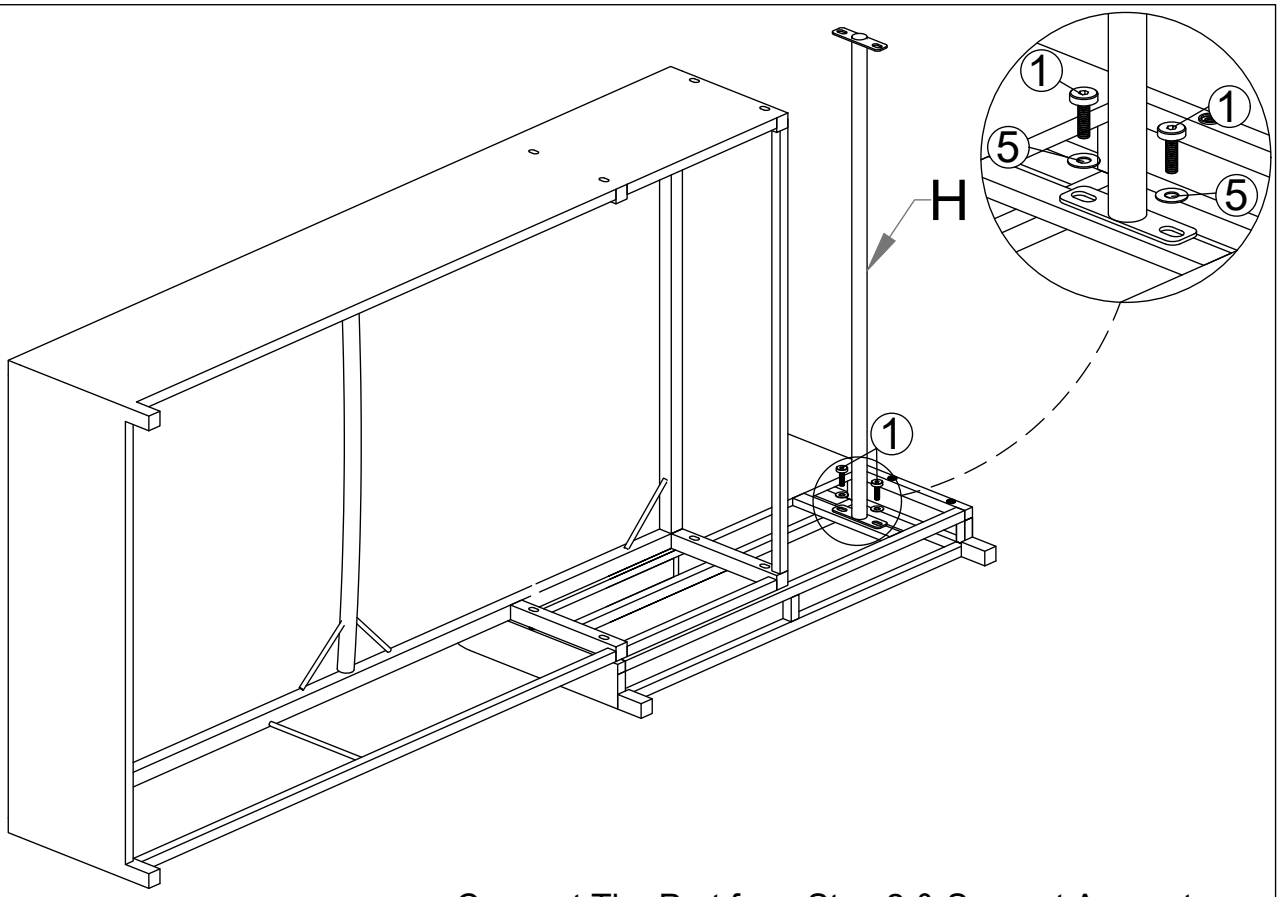

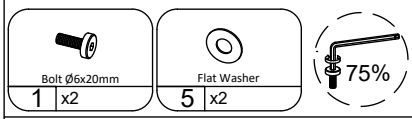

Connect The Part from Step 2 & Support Armrest Frame (H), tighten Bolt (1), Flat Washer (5) with Allen Key (7).

Step 4:

G x1

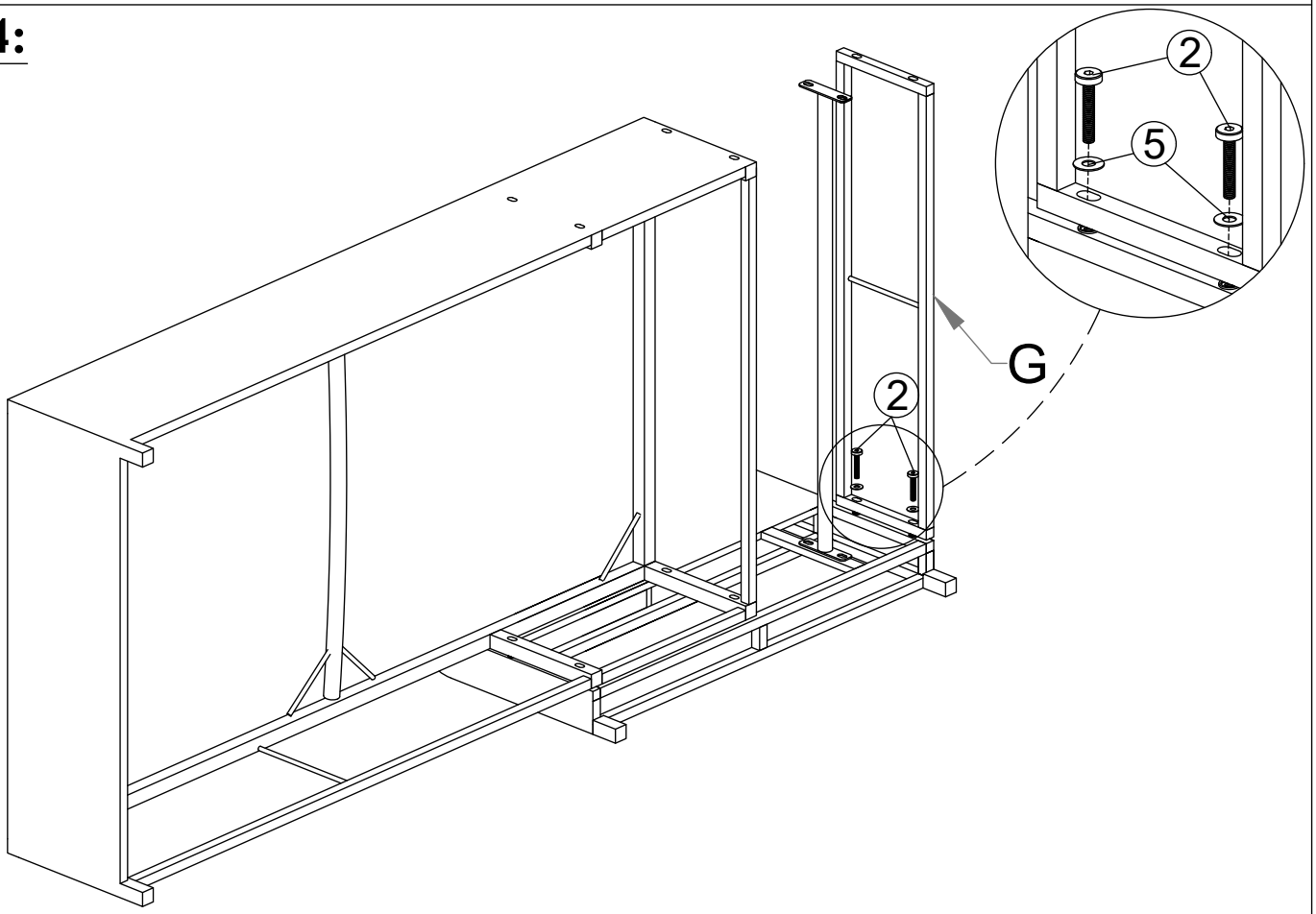

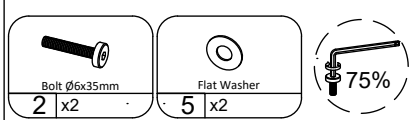

Connect The Part from Step 3 & Behind Frame (G), tighten Bolt (2), Flat Washer (5) with Allen Key (7).

Step 5:

D x1

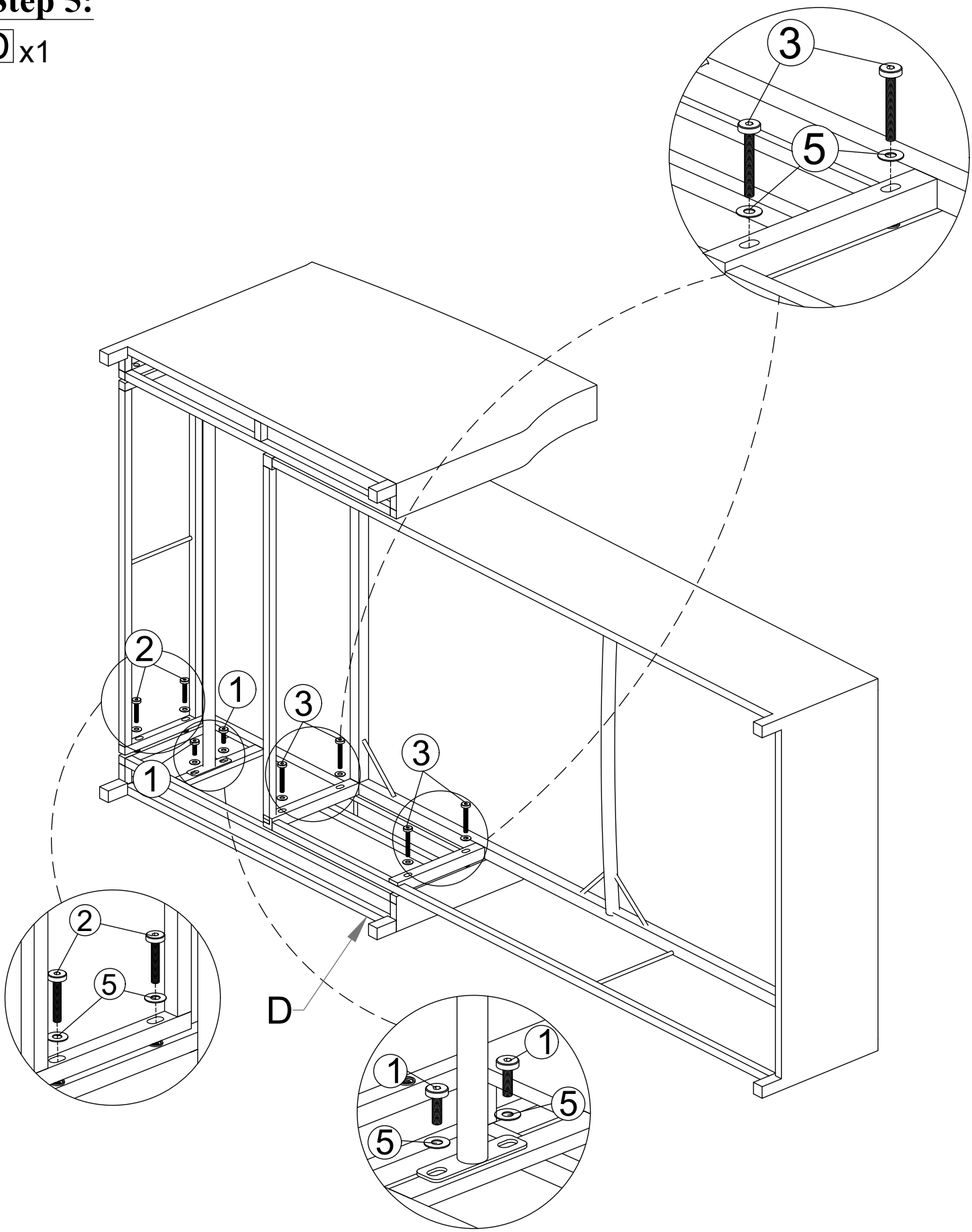

Bolt Ø6x20mm	Bolt Ø6x35mm	Bolt Ø6x50mm	Flat Washer
1 x2	2 x2	3 x4	5 x8

75%

Connect The Part from Step 4 & Left Armrest Frame (D), tighten Bolt (2),(3),(4), Flat Washer (5) with Allen Key (7).

Step 6:

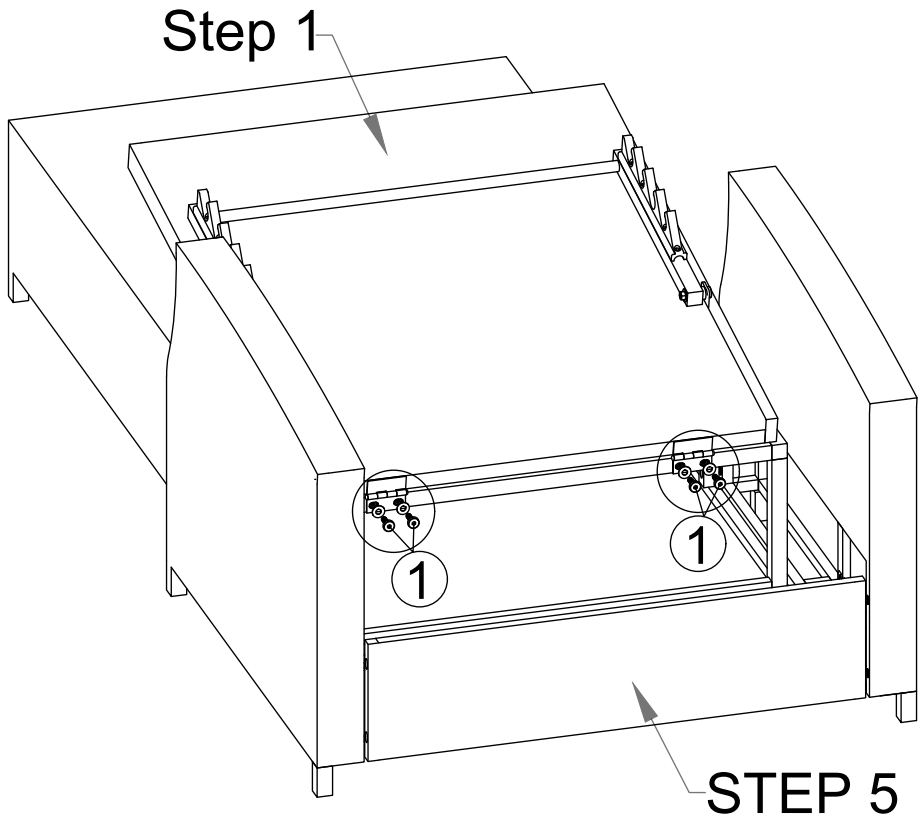

Bolt Ø6x20mm	Flat Washer	75%
1 x4	5 x4	

Connect The Part from Step 1 & Step 5, tighten Bolt (1) Flat Washer (5) with Allen Key (7).

Step 7:

B x1

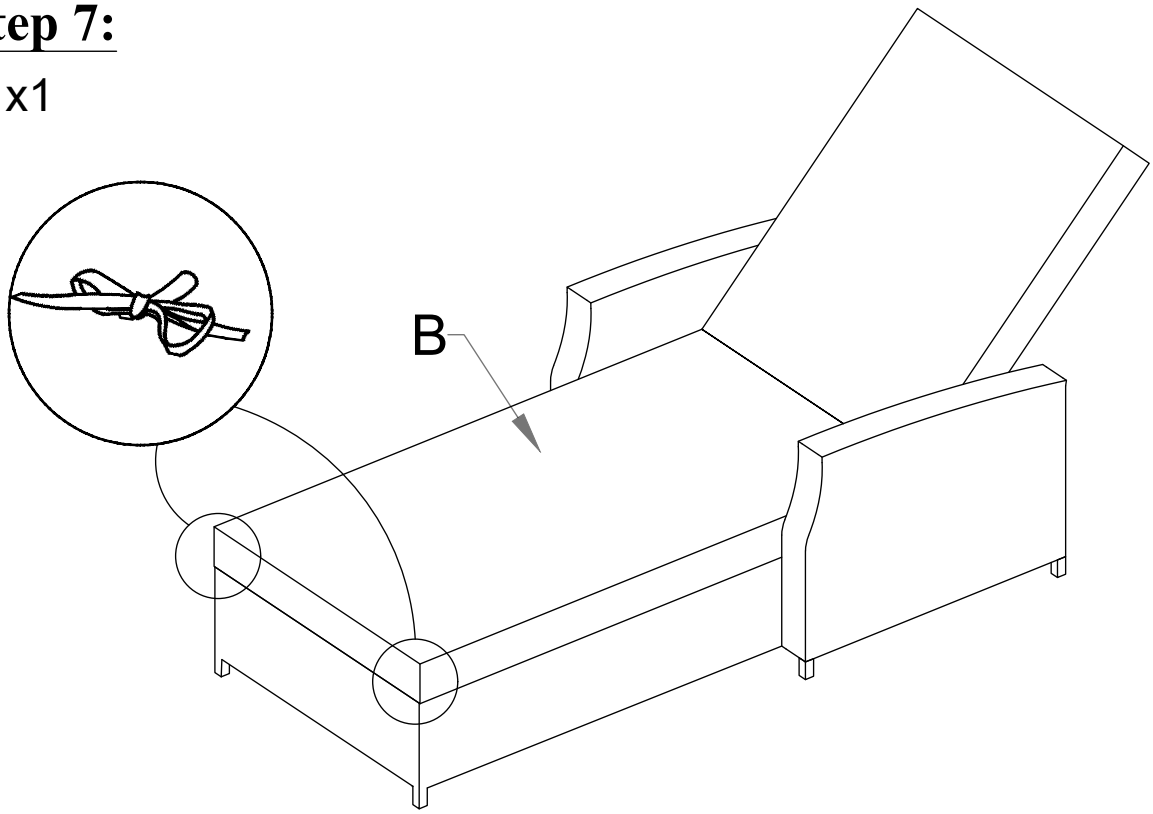

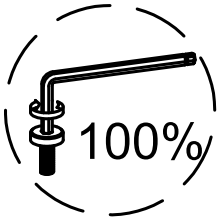

Put the Chaise Lounger upright and make sure all legs are level, then firmly tighten Bolts with Allen Key (7), up on Chaise Cushion (B) to Chaise Lounger, knot the string to Chaise Lounger and Finish Chaise Lounger.