STEP 3

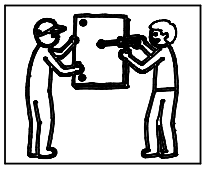

This step requires two people to complete the installation together.

PART	NO.	QTY.
	K810-3	2
	K810-3L	2
	C2	4
	F1	28

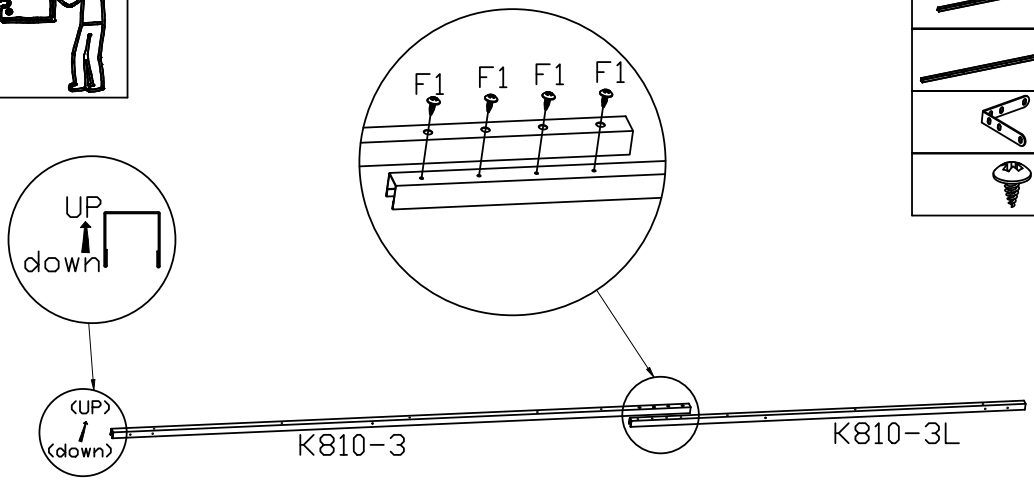

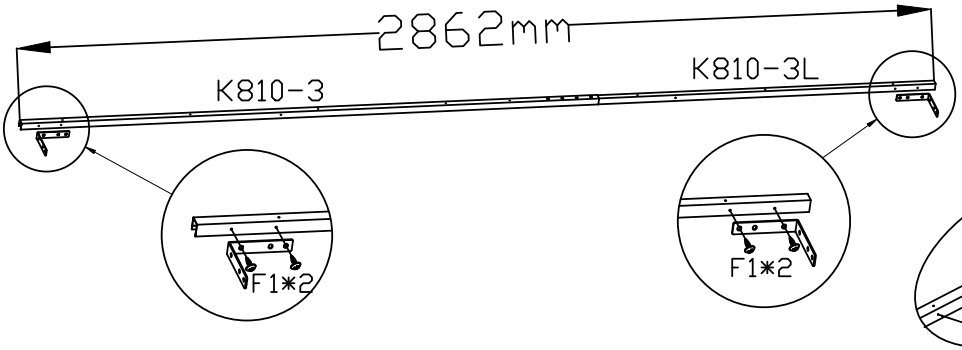

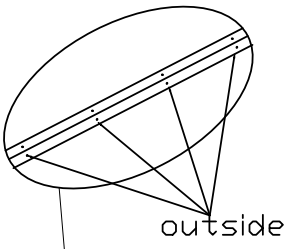

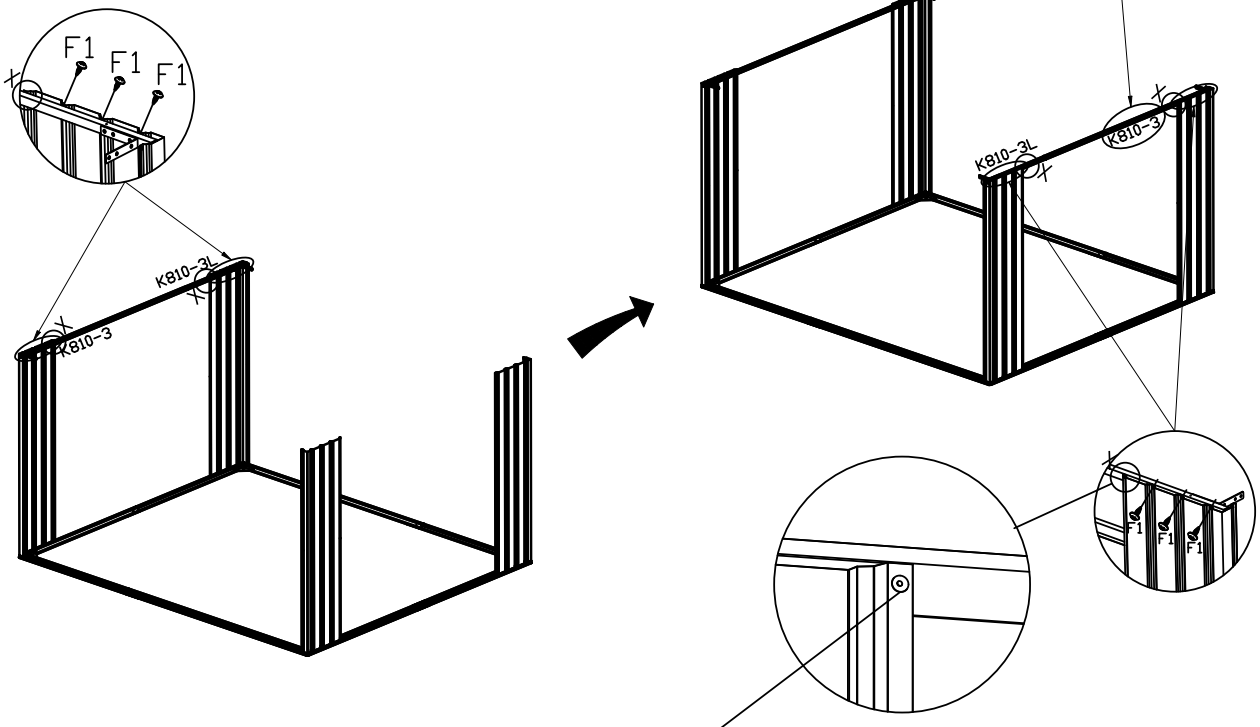

Dot not add screws that indicated with an X in diagram These need to be left undone.

STEP 4

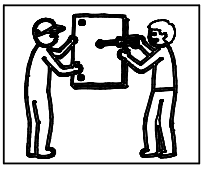

This step requires two people to complete the installation together.

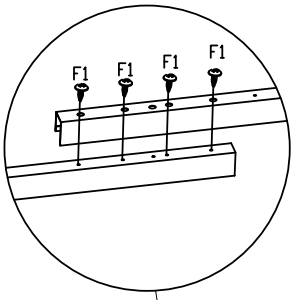

PART	NO.	QTY.
	K810-4	2
	F1209-4R	2
	F1	16

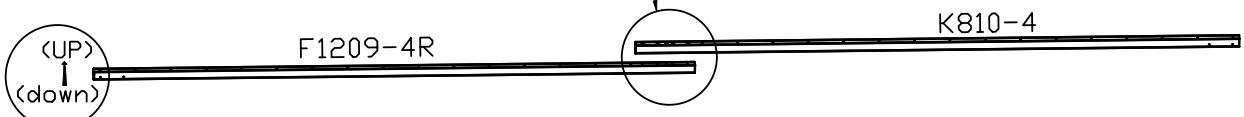

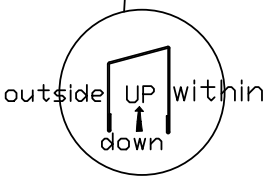

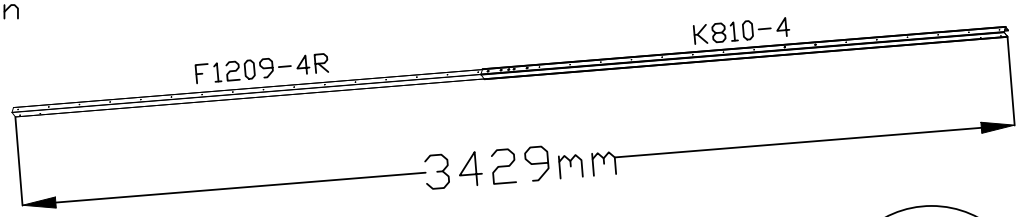

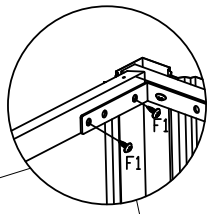

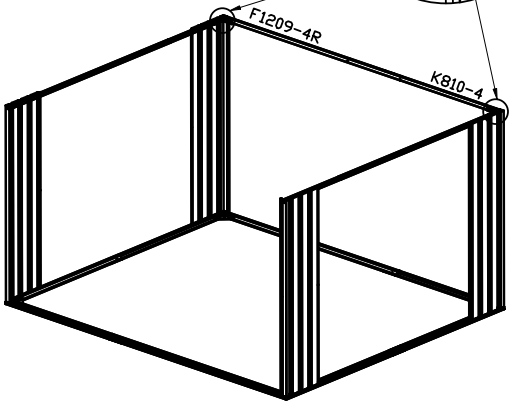

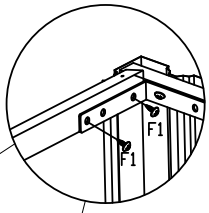

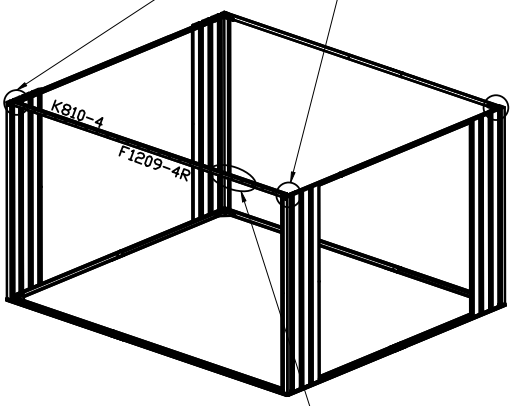

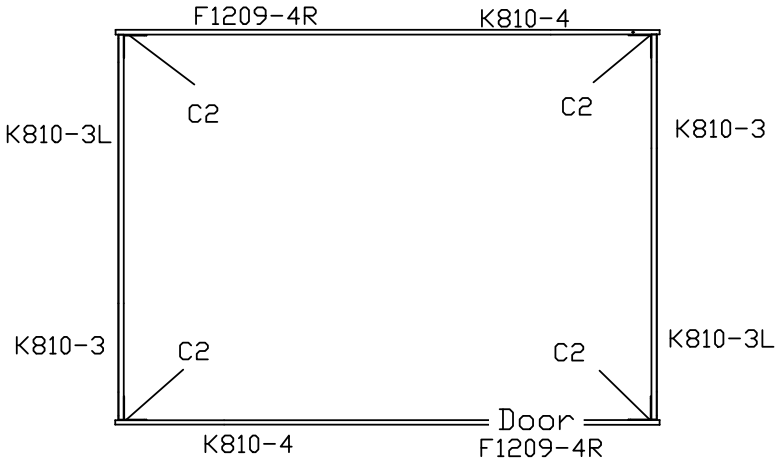

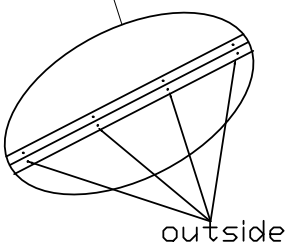

STEP 5

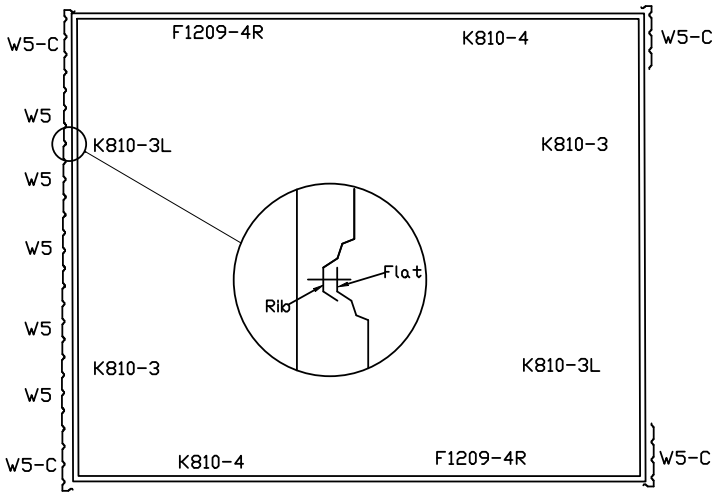

PART	NO.	QTY.
	W5	5
	F1	42
	F2	6

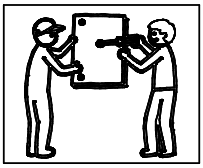

This step requires two people to complete the installation together.

STEP 6

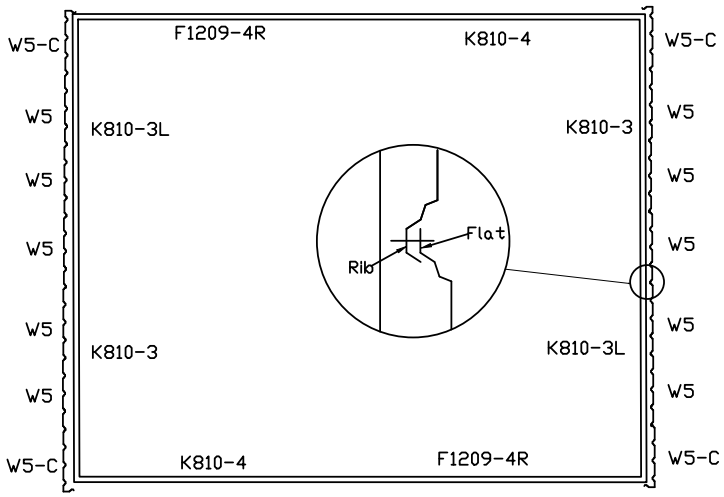

PART	NO.	QTY.
	W5	5
	F1	42
	F2	6

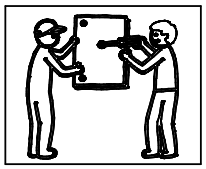

This step requires two people to complete the installation together.

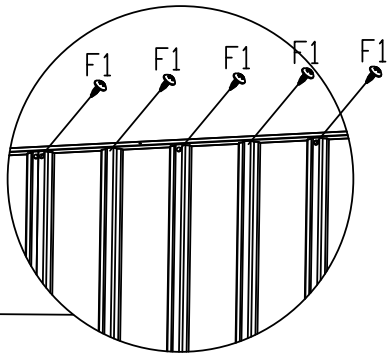

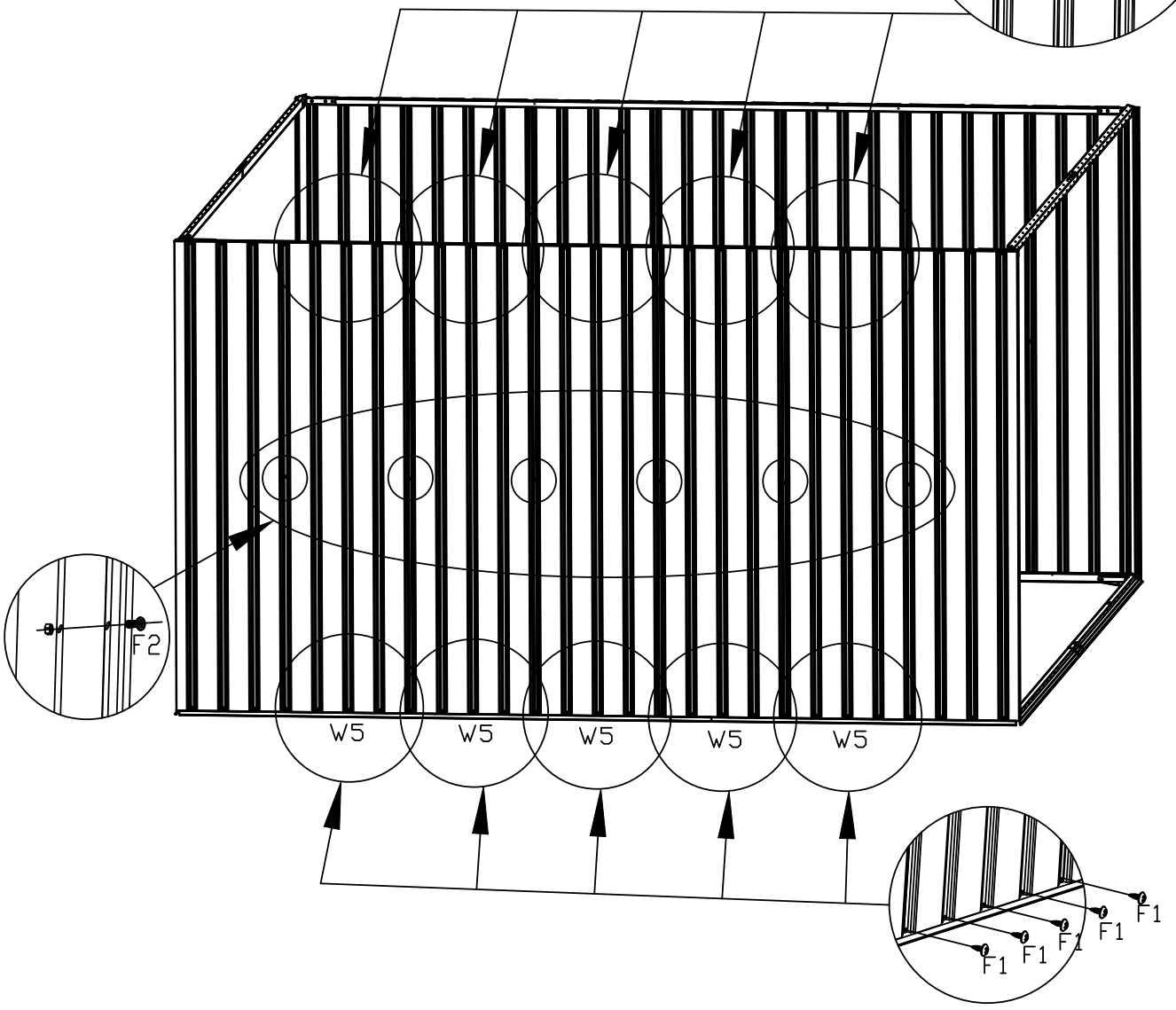

STEP 7

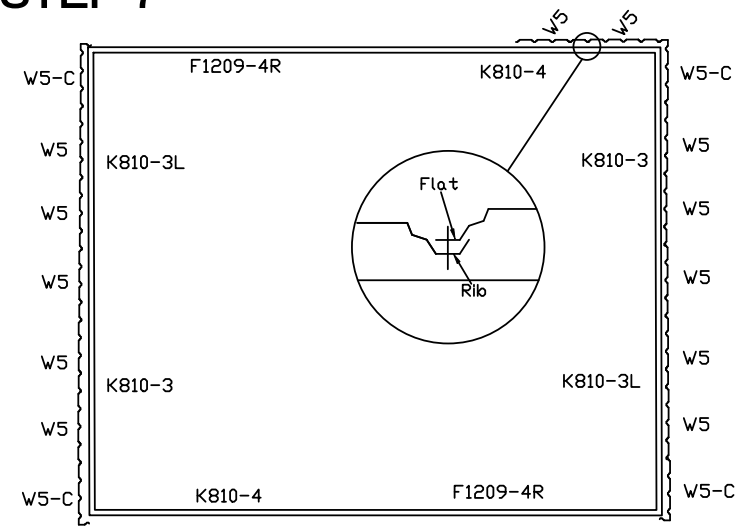

PART	NO.	QTY.
	W5	2
	F1	16
	F2	2

Dot not add screws that indicated with an X in diagram These need to be left undone.

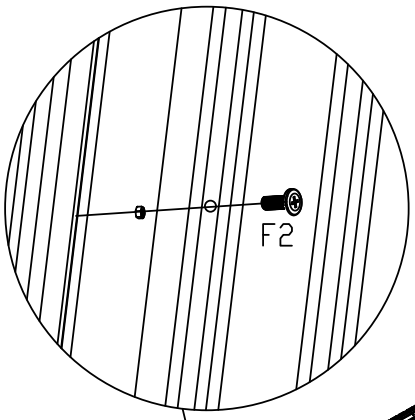

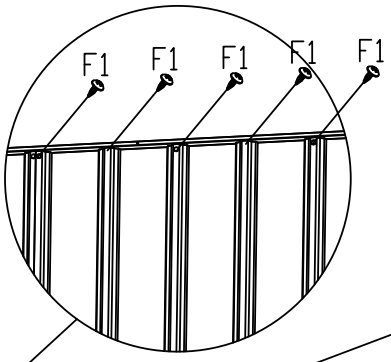

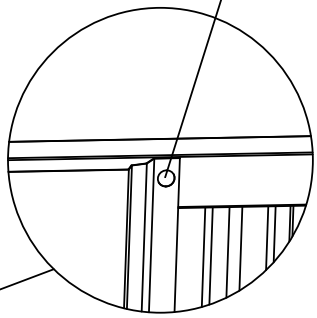

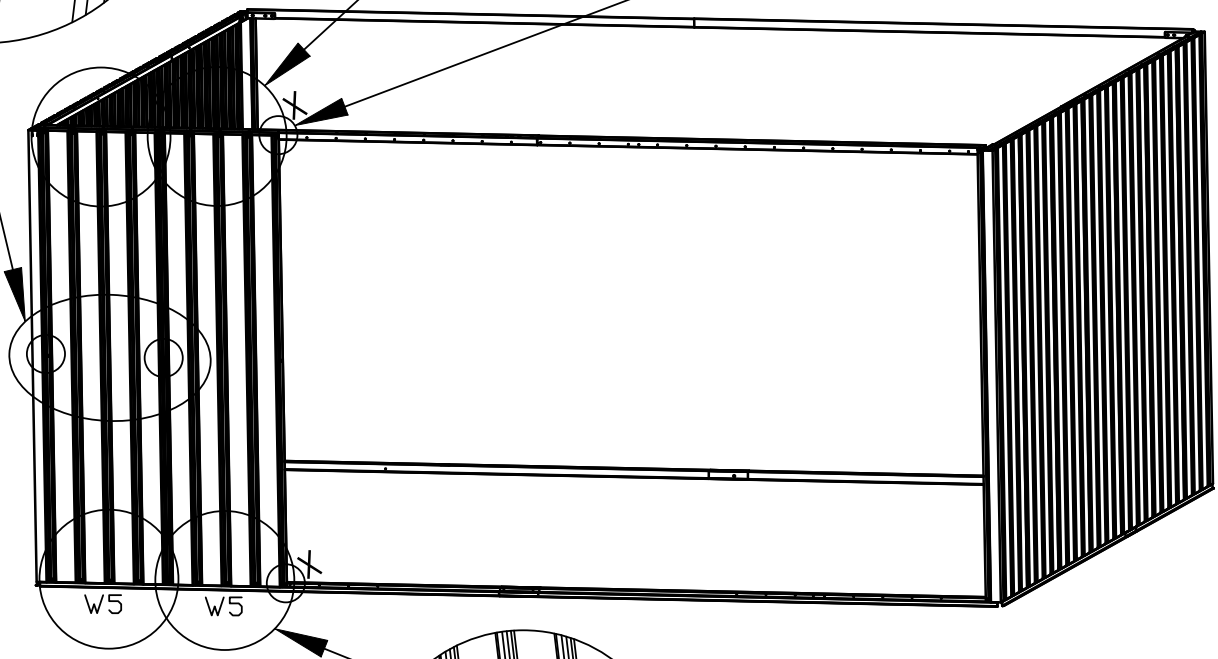

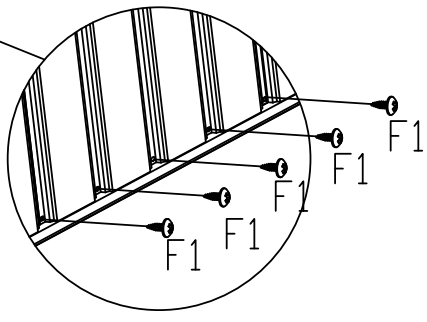

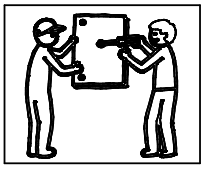

This step requires two people to complete the installation together.

STEP 8

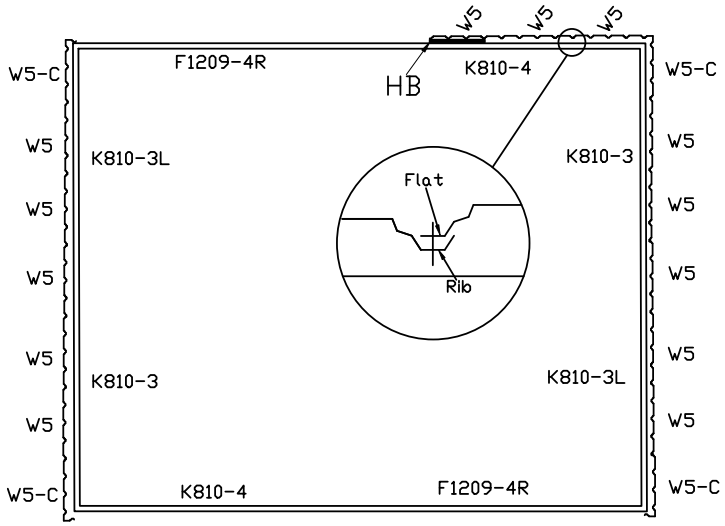

PART	NO.	QTY.
	W5	1
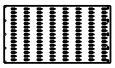	HB	1
	F1	8
	F2	1

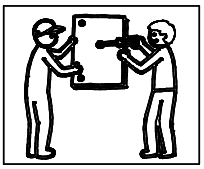

This step requires two people to complete the installation together.

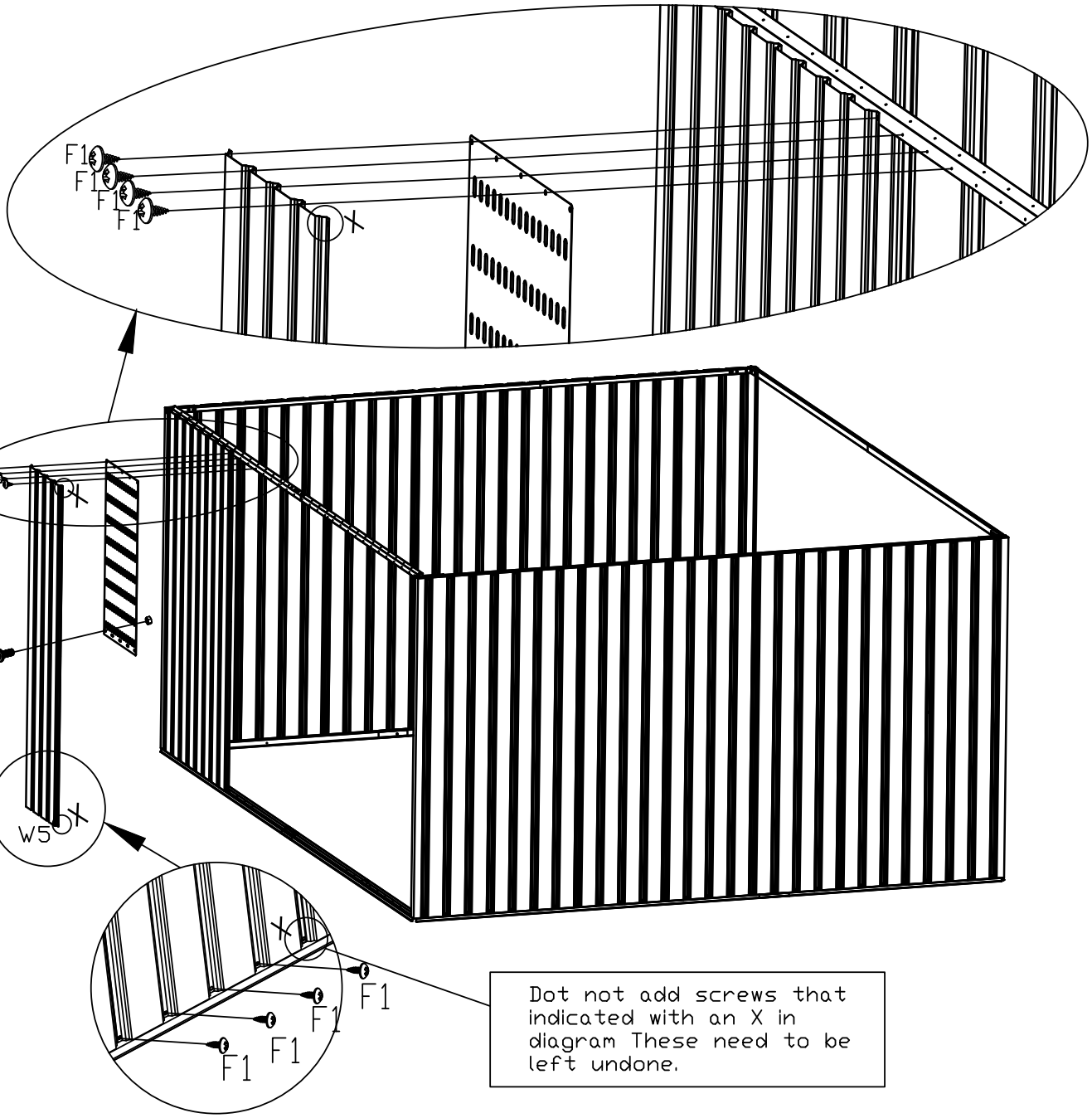

Dot not add screws that indicated with an X in diagram These need to be left undone.

STEP 9

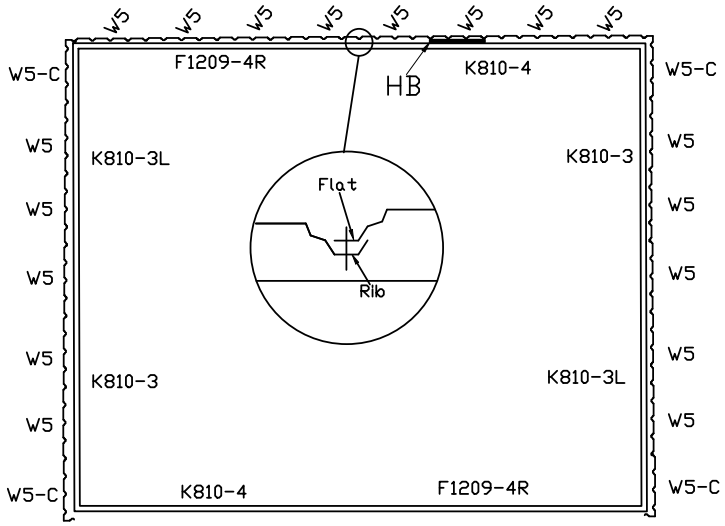

PART	NO.	QTY.
	W5	5
	F1	42
	F2	6

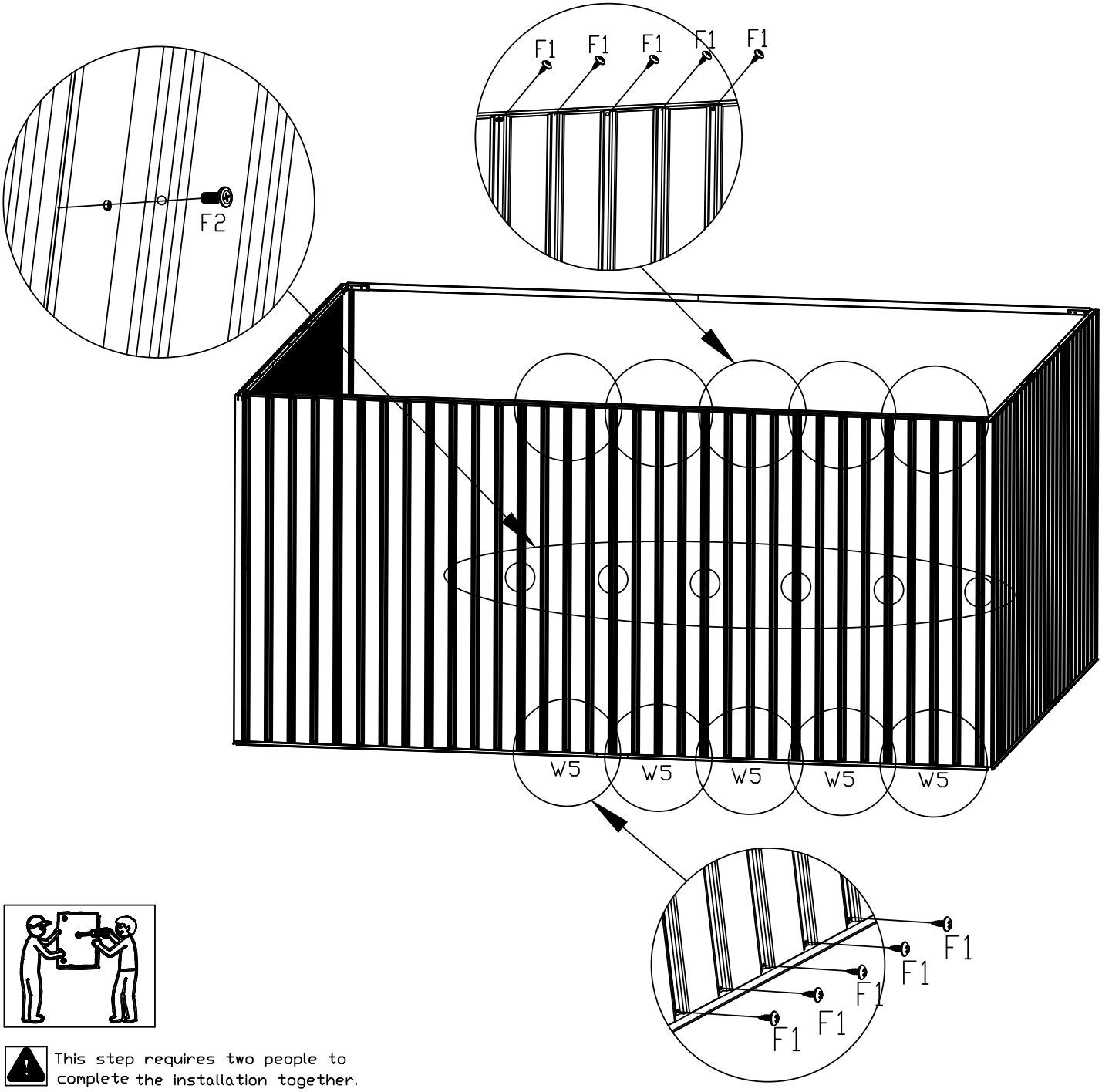

This step requires two people to complete the installation together.

STEP 10

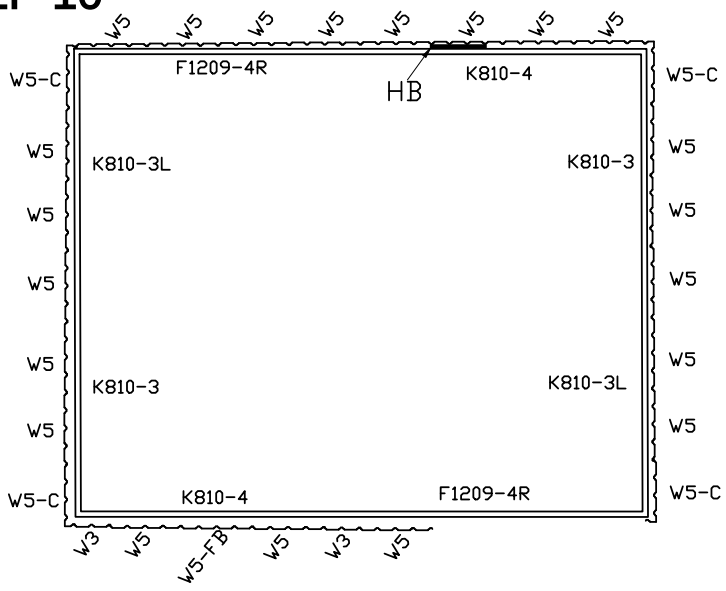

PART	NO.	QTY.
	W5	3
	W5-FB	1
	W3	2
	F1	35
	F2	2

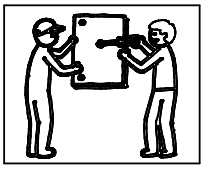

This step requires two people to complete the installation together.

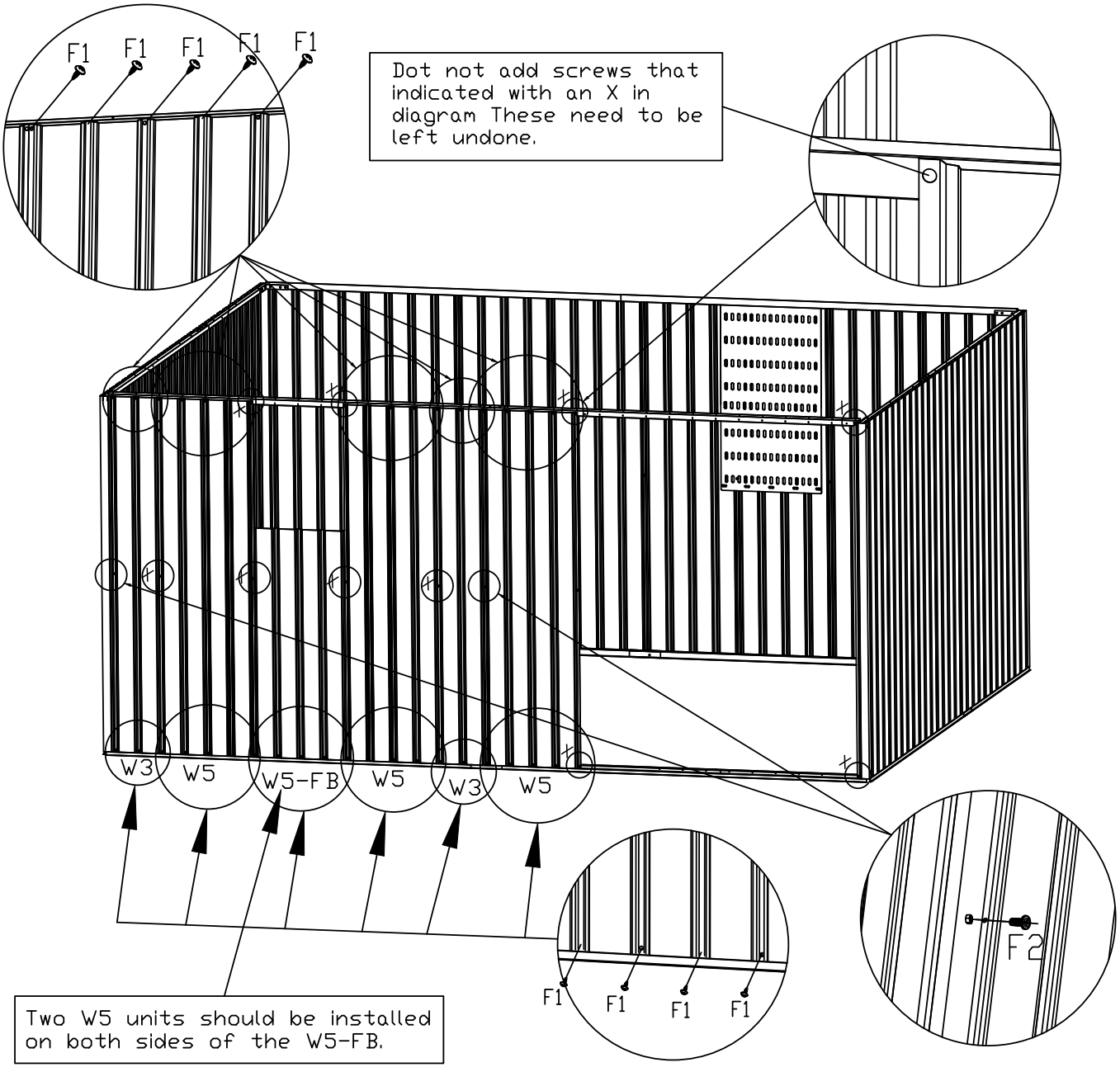

STEP 11

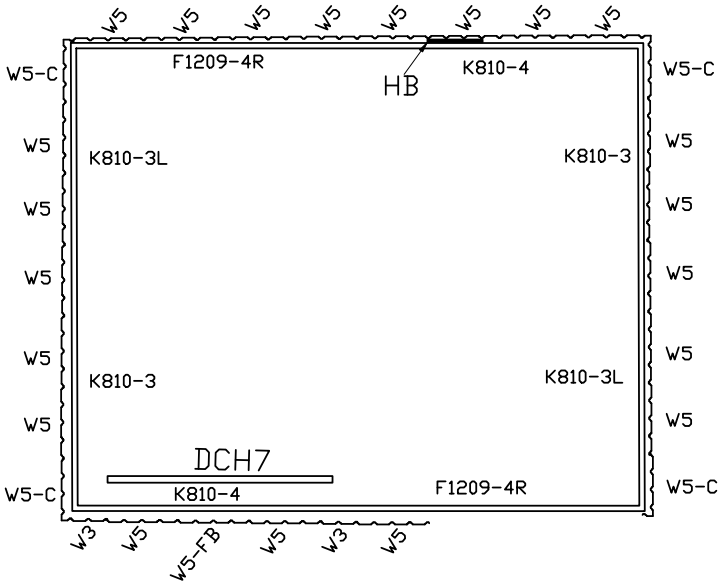

PART	NO.	QTY.
	DCH7	1
	F2	4

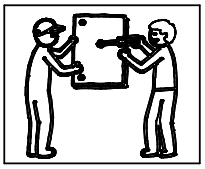

This step requires two people to complete the installation together.

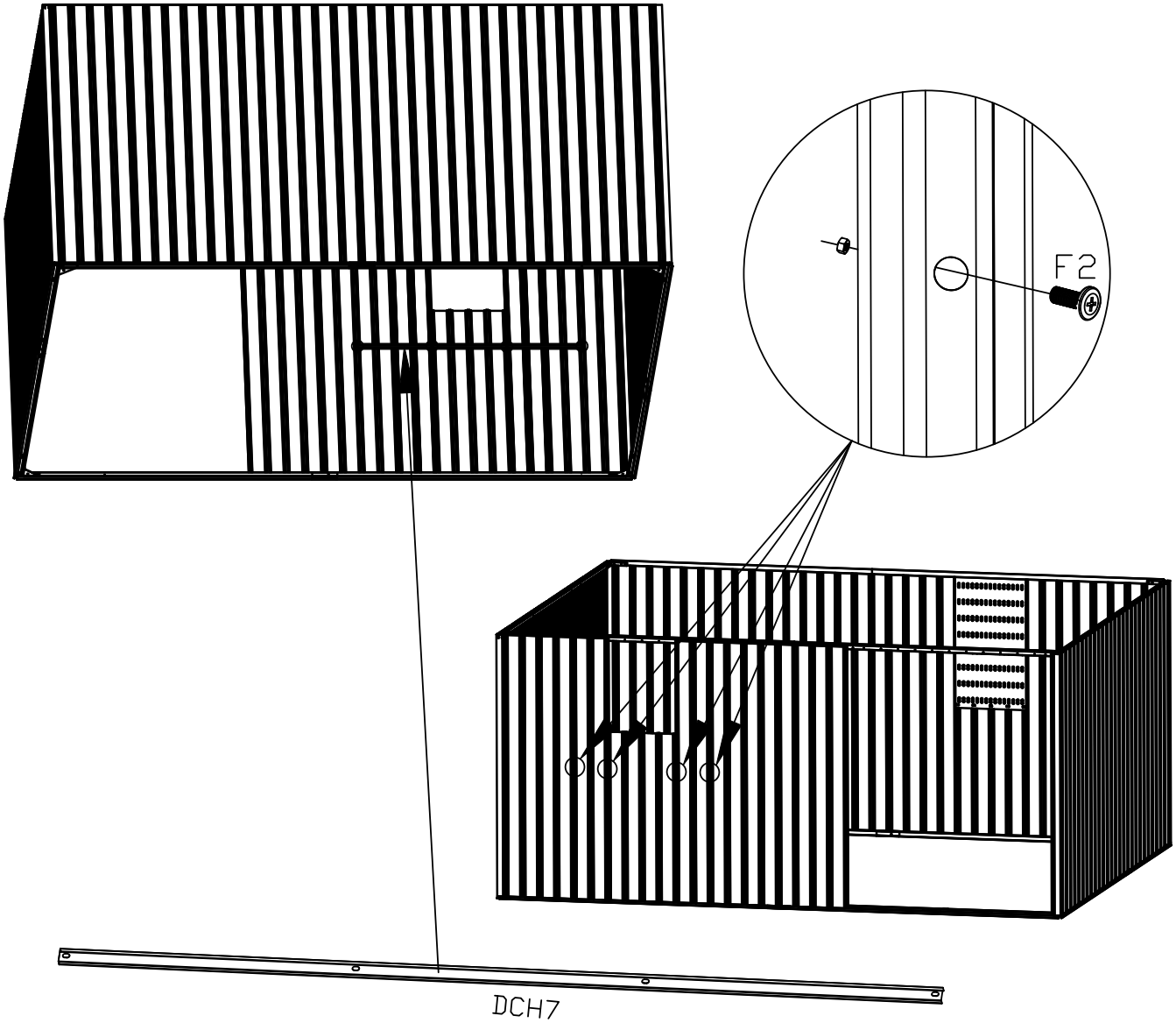

STEP 1 2

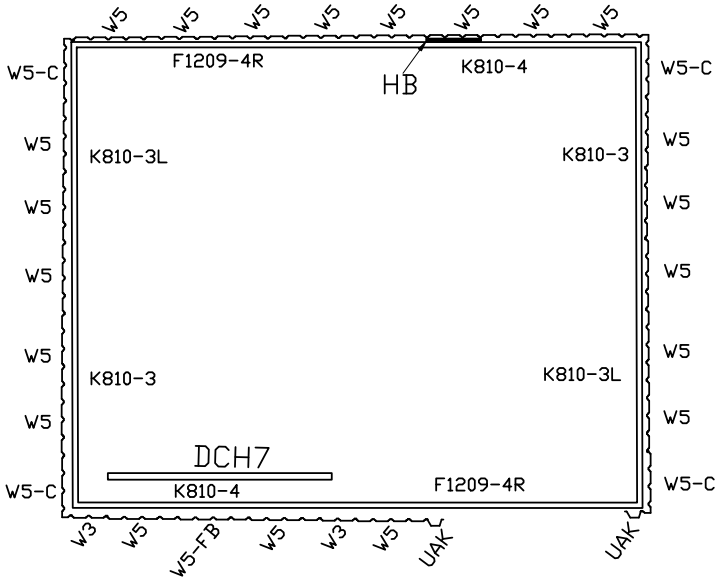

PART	NO.	QTY.
	UAK	2
	F1	8
	F2	2

