NTQ®
Better Life Together

626 679 3588
cleo@trendytotesinc.com
162 Atlantic St, Pomona, CA 91768

ASSEMBLY INSTRUCTIONS
BATHROOM VANITY TOP

cleo@trendytotesinc.com
626 679 3588

SCAN ME
PRODUCT INSTRUCTION VIDEO

MODEL NFX54-BY3K8

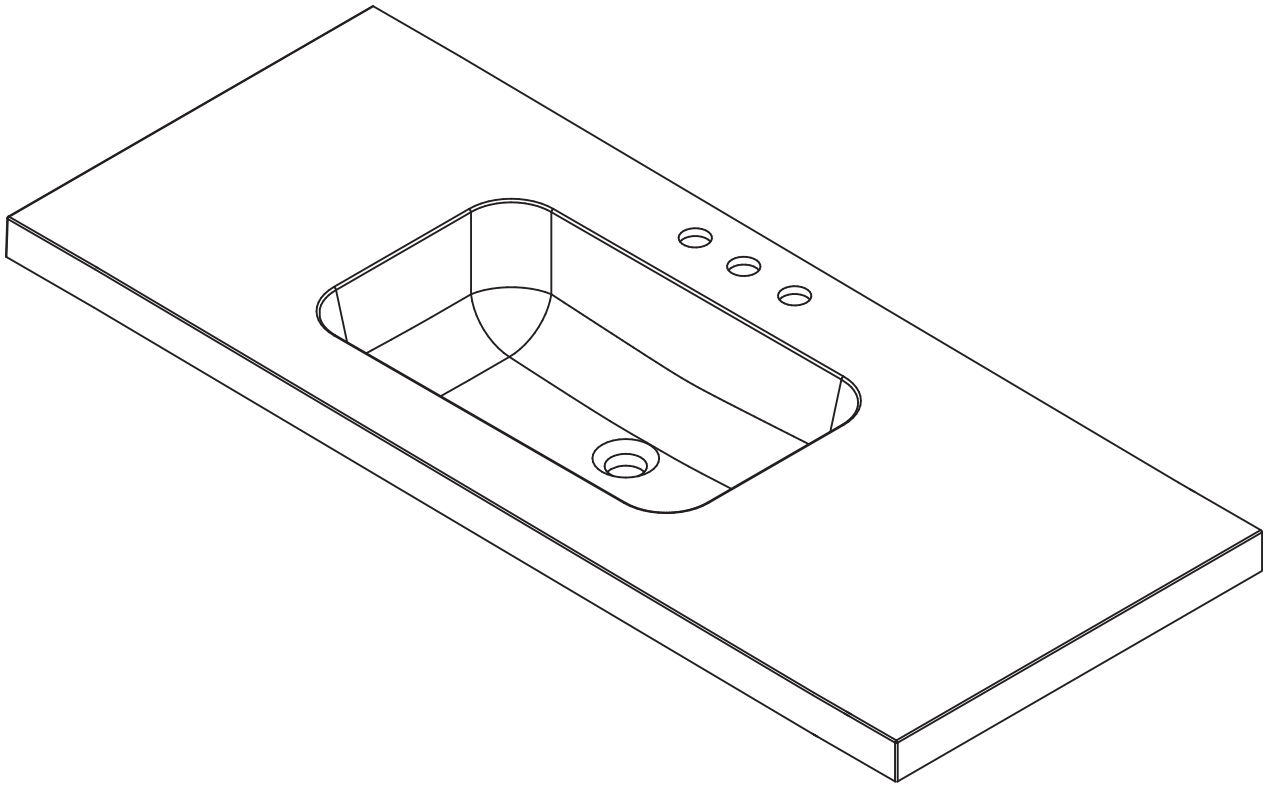

THANK YOU!

Dear Valued Customer,

Thanks to your kind support of NTQ, we hope our product can improve the quality of your life.

As our valued customer, your comments and opinions are very important to us. if you have any concerns, questions or comments, we hope that you will bring them to our attention.

Please keep the carton and packaging materials until your product is completely installed.

Feel free to contact us if you encounter any problems such as missing parts, or product defects during the installation process. We are happy to provide you with the most sincere service.

Sincerely,
NTQ Service Team

cleo@trendytotesinc.com 626 679 3588

SAFETY INFORMATION

Please read and understand this entire manual before attempting to assemble, operate or install the product. If you have any questions regarding the product, warranty service or additional information, please call customer service at **1-626-679-3588**, 8 a.m. - 7 p.m., EST, Monday - Friday. 9 a.m. - 6 p.m., EST, Saturday. In some areas, due to time differences, we might not be able to answer your call promptly. You can send a text message to **1-626-679-3588** or write an email to us **support@trendytotesinc.com**. We will reply to you shortly within 24 Hr.

WARNING:
DO not disassemble and/or reassemble the vanity top without a professional installer.

WARNING:
DO not use the vanity top before the adhesive is completely dry.

WARNING:
To prevent possible injury, it is recommended two people install the vanity top to the vanity.

WARNING:
The vanity must be strong and standing firm to support the vanity top. The size of vanity must match with vanity top.

WARNING:
The vanity must be strong and standing firm to support the vanity top. The size of vanity must match with vanity top.

WARRANTY

The manufacturer provides a one-year limited warranty for residential use that the vanity top will be free from manufacturing defects, provided the original purchaser resides in or owns the home of installation, and provided the vanity top is installed and maintained according to the installation and maintenance instructions contained within and supplied by the manufacturer. The liability will be limited to cost of products only. This warranty is in lieu of any other express warranties. During the warranty period, the manufacturer, at its option, will repair or replace any part or product that proves to have substantial defects in materials or workmanship, or the manufacturer will provide an equivalent replacement product. This warranty does not cover any problems or damage which result from improper transportation, improper installation, mishandling, misuse, abuse, neglect, abnormal use, commercial use, improper maintenance, non-manufactured repairs, accidents. This warranty also does not cover labor charges for installation or removal of the product or any associated products.

PACKAGE CONTENTS

1.VANITY TOP

2.BACKSPLASH

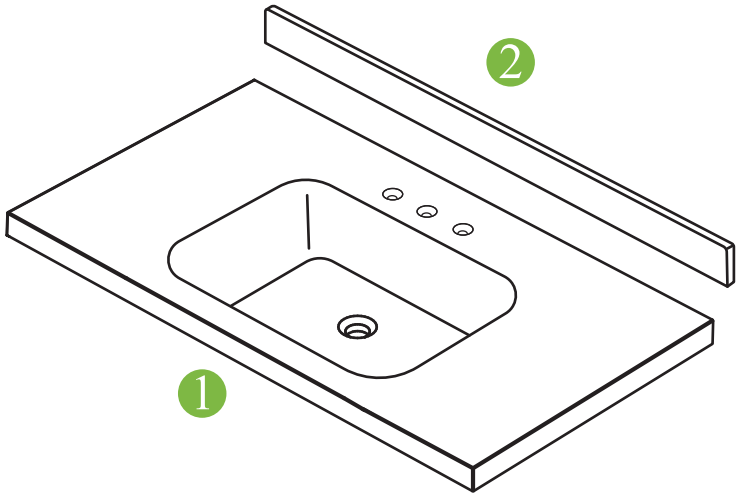

PRE-INSTALLATION

Products should be examined for defects prior to installation. Before beginning installation of product, make sure all parts are present. Compare parts with package contents list. If any part is missing or damaged, do not attempt to assemble, install or operate the product. Contact customer service for replacement parts.

Estimated Assembly Time: 10 minutes.

TOOLS REQUIRED FOR ASSEMBLY (not included):

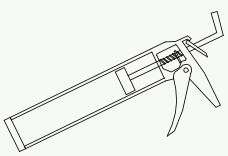

Caulking gun

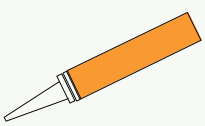

caulk



silicone adhesive

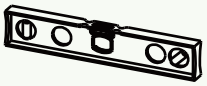

level



putty knife

cleo@trendytotesinc.com 626 679 3588

INSTALLATION

1. Place silicone adhesive on the top edges of vanity (not included).
Carefully set vanity top on top of vanity.

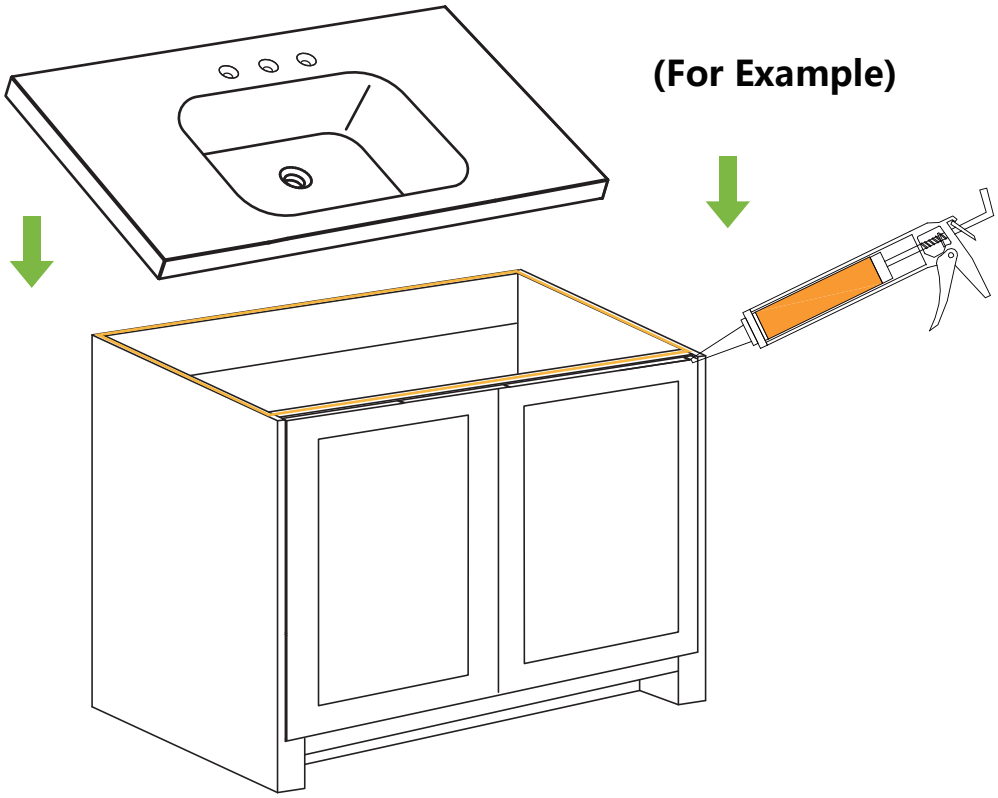

2. Apply adhesive to the back of backsplash, pushing firmly to secure backsplash to the wall. Use caulk to close the gap between the vanity top and backsplash. Once adhesive dries, install faucet and drain assemblies (not included) according to manufacturers' instructions.

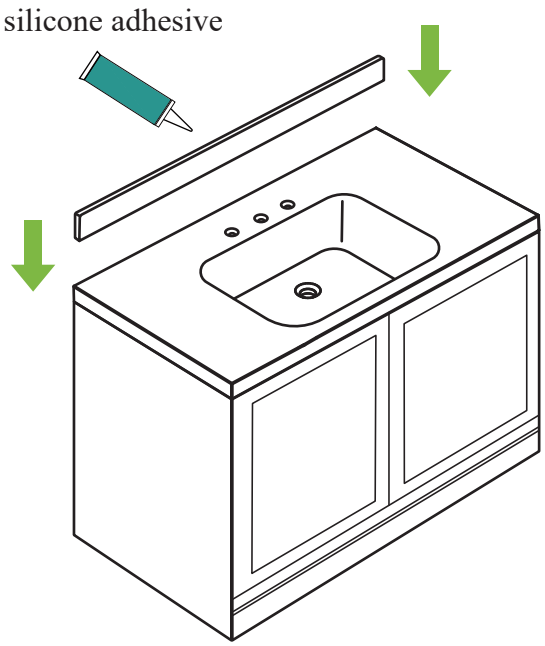

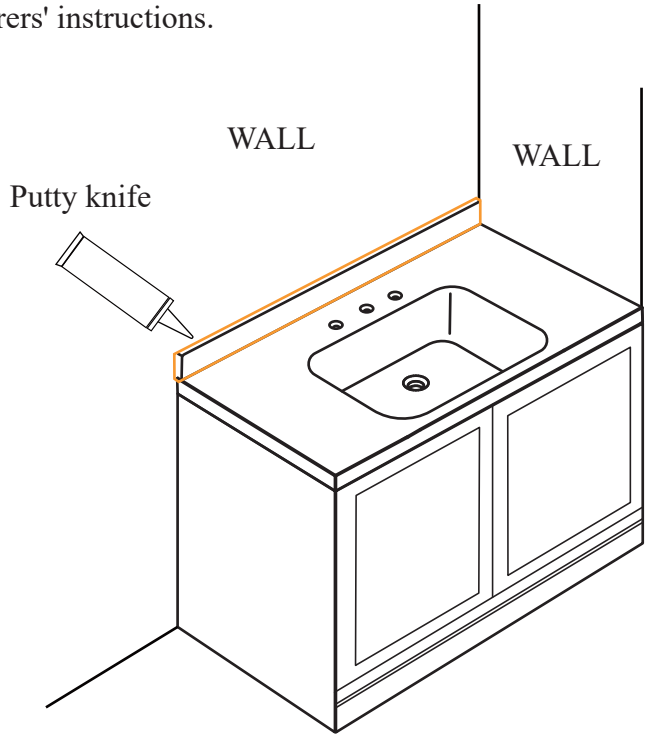

cleo@trendytotesinc.com 626 679 3588

CARE & MAINTENANCE

Transform your bathroom with our sleek and durable solid surface vanity tops. Designed for elegance and longevity, our tops offer a seamless, non-porous surface that resists stains, mold, and bacteria — making cleaning a breeze. They provide the perfect finishing touch to your bathroom decor. With easy repairability and exceptional durability, our solid surface vanity tops combine beauty and practicality for a space you'll love for years to come. Upgrade your bathroom today with a surface built for style and performance.

Regular Cleaning: Wipe the surface with a soft cloth or sponge using mild soap and warm water. Avoid harsh chemicals or abrasive cleaners that can damage the finish.

Clean Spills Promptly: Wipe up any spills immediately to prevent staining, especially from products like makeup, hair dye, or cleaning agents.

Avoid Hot Items: Use hot pads or trivets for hot tools and items to prevent heat damage, even though solid surfaces are heat resistant.

Prevent Scratches: Use cutting boards or mats to avoid scratching the surface. Refrain from cutting directly on the vanity top.

Address Scratches and Minor Damages: Small scratches can often be buffed out using a gentle abrasive cleaner or a polishing compound designed for solid surfaces.

Seamless Repairs: Minor chips or cracks can typically be repaired with a patching compound or by professional restoration.

Avoid Heavy Impact: Be cautious with heavy or Sharp objects that could chip or crack the surface.

Routine Inspection: Regularly check your vanity top for signs of damage or wear and address any issues promptly to maintain its appearance and integrity.

cleo@trendytotesinc.com 626 679 3588

HOME SERVICES

SCAN ME

INSTALLATION VIDEO

Missing Part or Defective?

Please Contact the Customer Service Team

cleo@trendytotesinc.com