Assembly Instruction

A		1
B	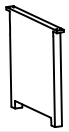	2
C		1
D	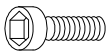 M6*30	8
E	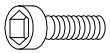 M6*25	4
F		12
G	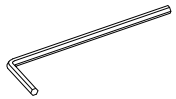	1

①

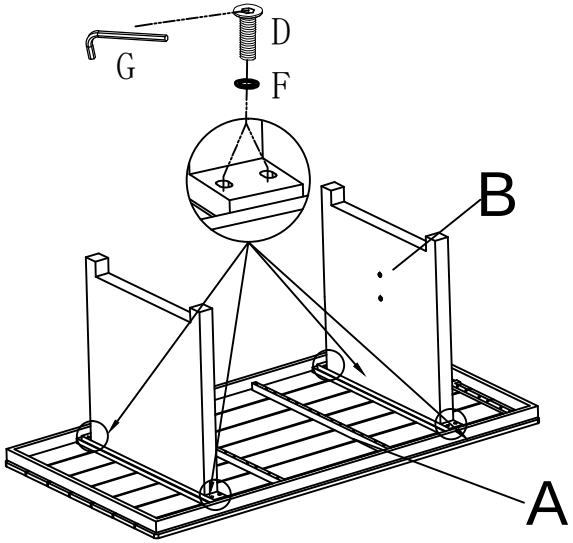

②

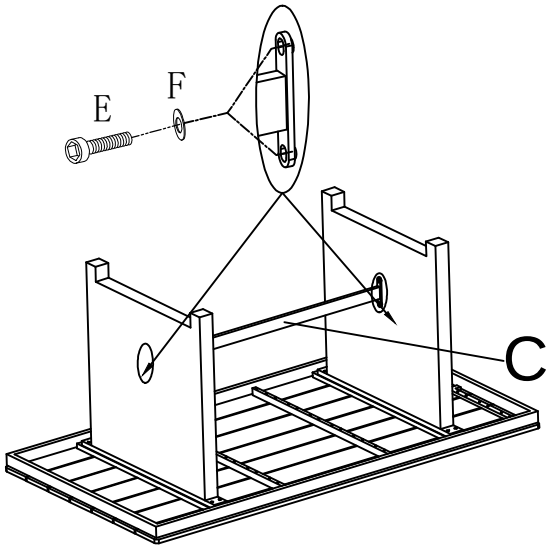

③

