SKU：BW00151AAK/白色
SKU：BW00151AAB/黑色

# LOFT BED
# ASSEMBLY INSTRUCTIONS

If you have any questions, please feel free to contact us.
Email: hdteam@aminalife.com

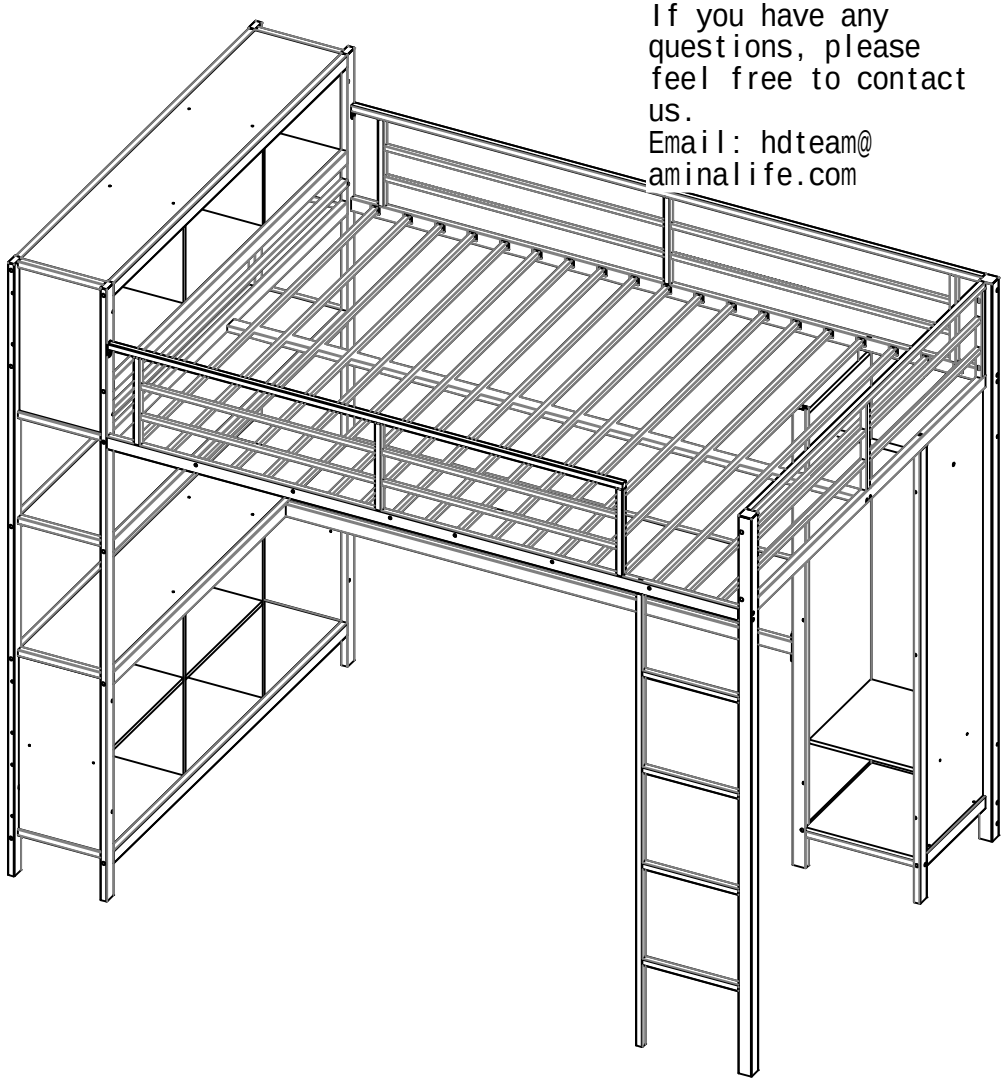

Attention *Please use the screws according to the instructions, thank you.*



## SAFETY WARNINGS AND GENERAL NOTES:

1. Follow the information on the warnings on the bunk bed end structure and on the carton. Do not remove the warning label from the bed.
2. Always use the recommended size mattress on mattress support, or both, to help prevent the likelihood of entrapment or falls.
3. Do not allow children under 6 years of age to use the upper bunk.
4. Periodically check and ensure the guardrail, ladder and other components are in their proper position, free from damage, and all connectors are tight.
5. Do not allow horseplay on or under beds.
6. Always prohibit jumping on the bed.
7. Prohibit more than one person on upper bunk.
8. Always use the ladder for entering and leaving the upper bunk.
9. Do not use substitute parts. Contact the manufacturer or dealer for replacement parts.
10. Use of a night-tight may provide added safety precaution for a child using the upper bunk.
11. Always use guardrails on both long sides of the upper bunk.
12. If the bunk bed will be placed next to a wall, the guardrail that runs the full length of the bed should be placed against the wall to prevent entrapment between the bed and the wall. The use of water or sleep flotation mattresses is prohibited.
13. **STRANGULATION HAZARD**-Never attach or hang items to any part of the bed that are not designed for use with the bed; for example, but not limited to, hooks, belts and jump ropes.
14. Keep these instructions for future reference.
15. We recommend assembling your bunk bed on the shipping carton to protect your floor or carpet.
16. Be certain all staples are out of the box before beginning assembly on the shipping carton.
17. USE ONLY MATTRESSES WHICH ARE AS THE TABLE BELOW ON UPPER AND ON LOWER BUNKS.

Up bed (bunk bed and tribed included)

| Mattress size | Length | Width | Thickness |
|---|---|---|---|
| Queen Standard | 79"-80" | 59"-60" | 6"max |

18. SURFACE OF MATTRESS MUST BE AT LEAST 5"(127MM) BELOW THE UPPER EDGE OF GUARDRAILS.
19. Replacement Parts:
Replacement Parts, including additional guardrails, may be obtained from any of our （Shenzhen Yuefeng Zhiqi Technology Co., Ltd）dealers.

# Bed parts view

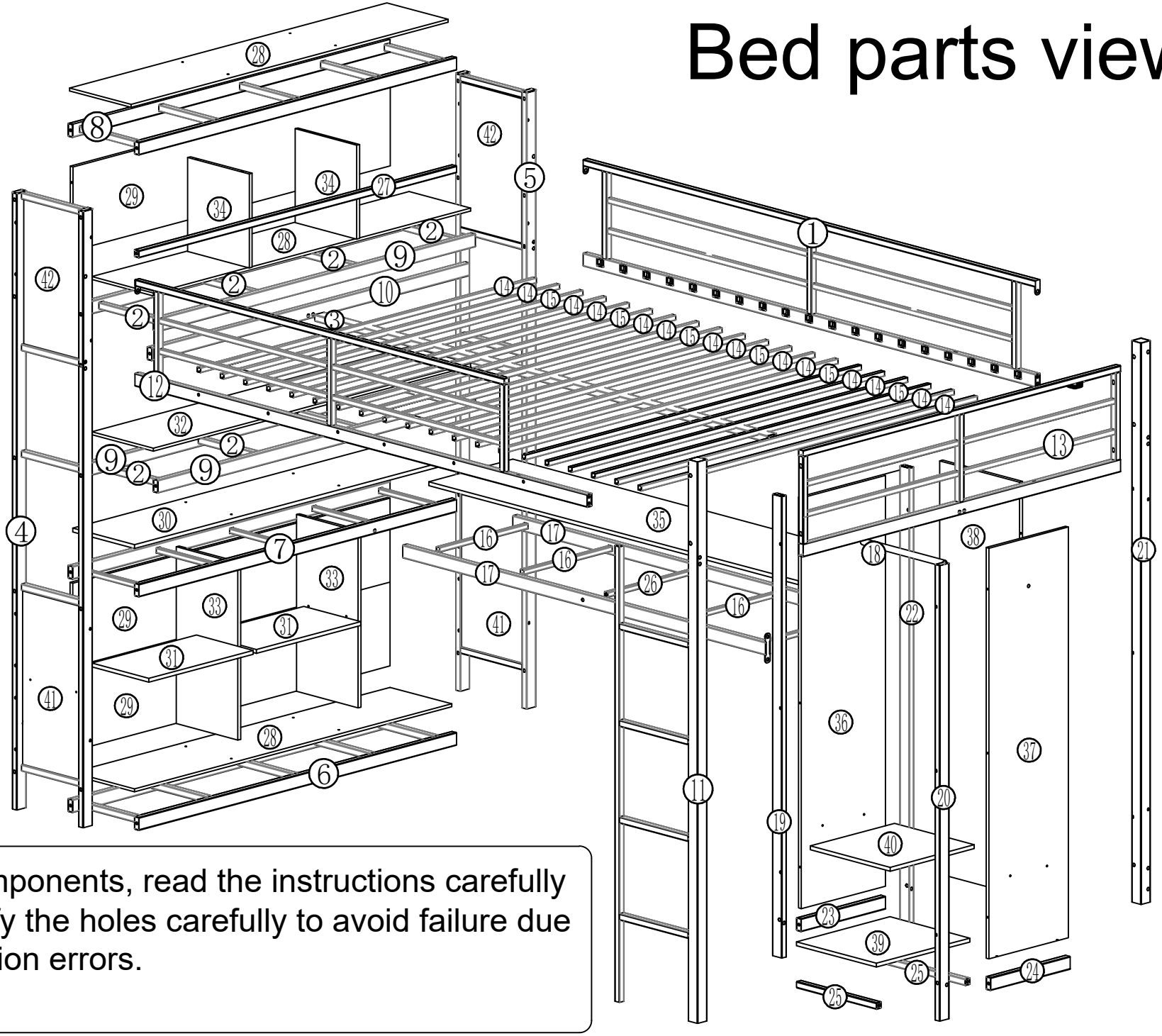

Attention

For all components, read the instructions carefully and identify the holes carefully to avoid failure due to installation errors.
thank you.



1-1pcs



11-1pcs

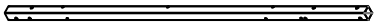

21-1pcs



28-3pcs

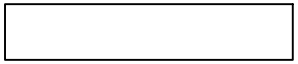

35-1pcs



2-8pcs

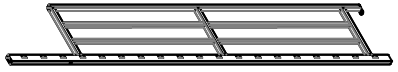

12-1pcs



22-1pcs

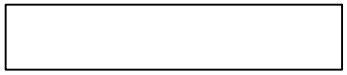

29-3pcs



36-1pcs



3-1pcs

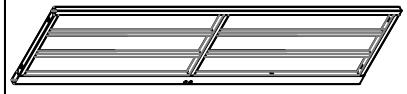

13-1pcs

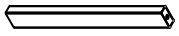

23-1pcs

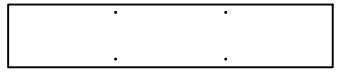

30-1pcs



37-1pcs

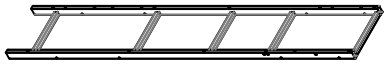

4-1pcs



14-14pcs

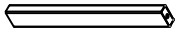

24-1pcs



31-2pcs



38-1pcs

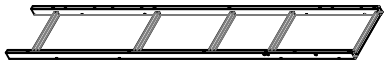

5-1pcs



15-6pcs

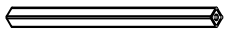

25-2pcs

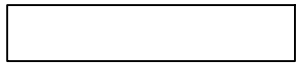

32-1pcs

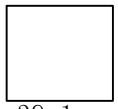

39-1pcs



40-1pcs

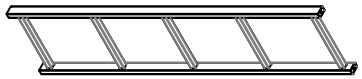

6-1pcs



16-4pcs

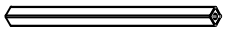

26-1pcs

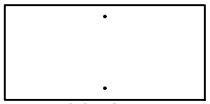

33-2pcs

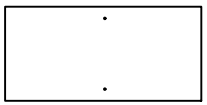

41-2pcs

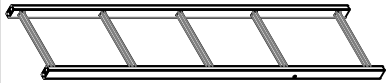

7-1pcs



17-2pcs



27-1pcs



34-2pcs



42-2pcs

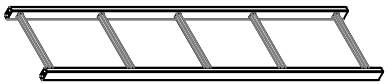

8-1pcs

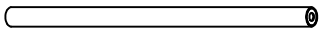

18-1pcs

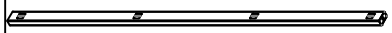

9-4pcs

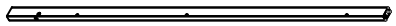

19-1pcs



10-1pcs



20-1pcs

# Part List

| | | | | | | | |
|---|---|---|---|---|---|---|---|
|  B 8*15 6PCS |  C 8*35 17PCS |  D 8*55 40PCS |  E 6*30 20PCS |  F 7PCS |  H 4*50 22PCS |  O 1PCS |  L |
| | | | |  G 4*35 38PCS |  M |  K 40pcs |  J 5*10 12PCS |

*Step 1: Use hardware M,G to connect #5, #41 and #42 together.*

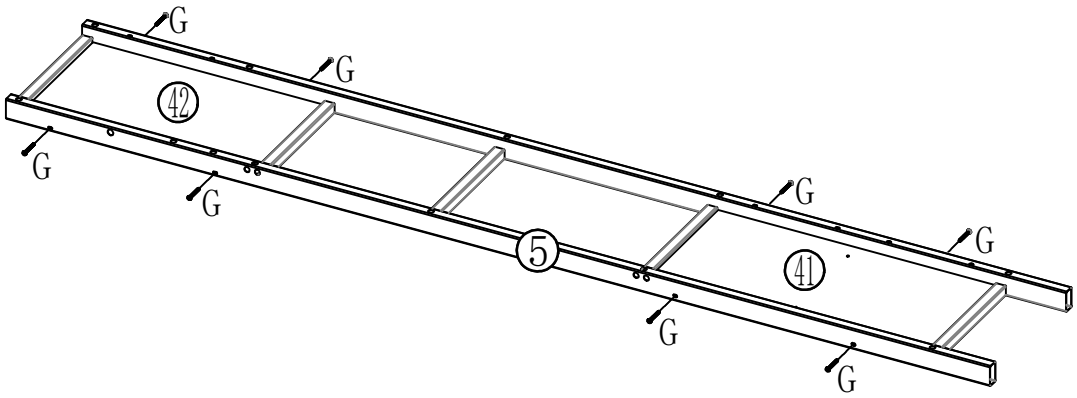




5-1PCS

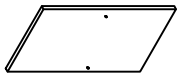

41-1PCS

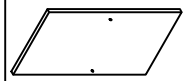

42-1PCS



G
M4*25-8PCS



M



*Step 2: Use hardware M,G to connect #4, #41 and #42 together.*

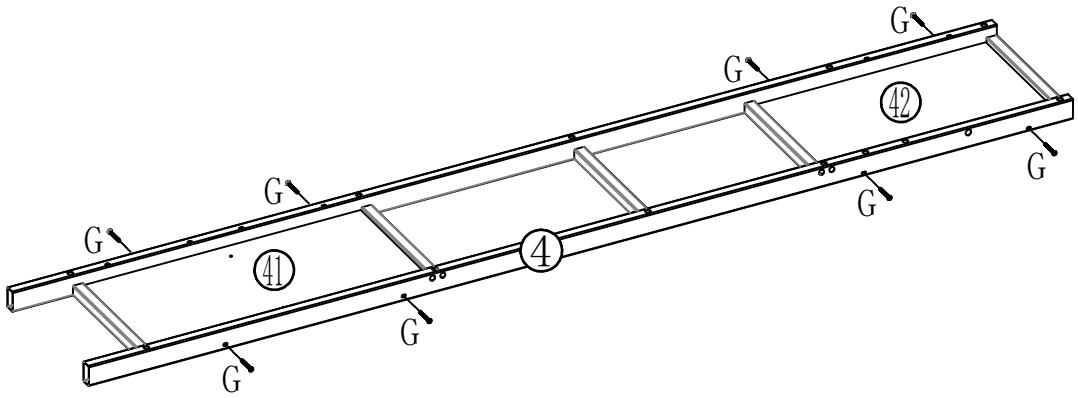




4-1PCS

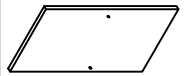

41-1PCS

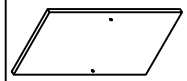

42-1PCS



G
M4*25-8PCS



M

## Step 3: Use hardware L and D to connect #2,#4,#5,#6, #7,#8,#9,#10 and #27 to the previously installed components.

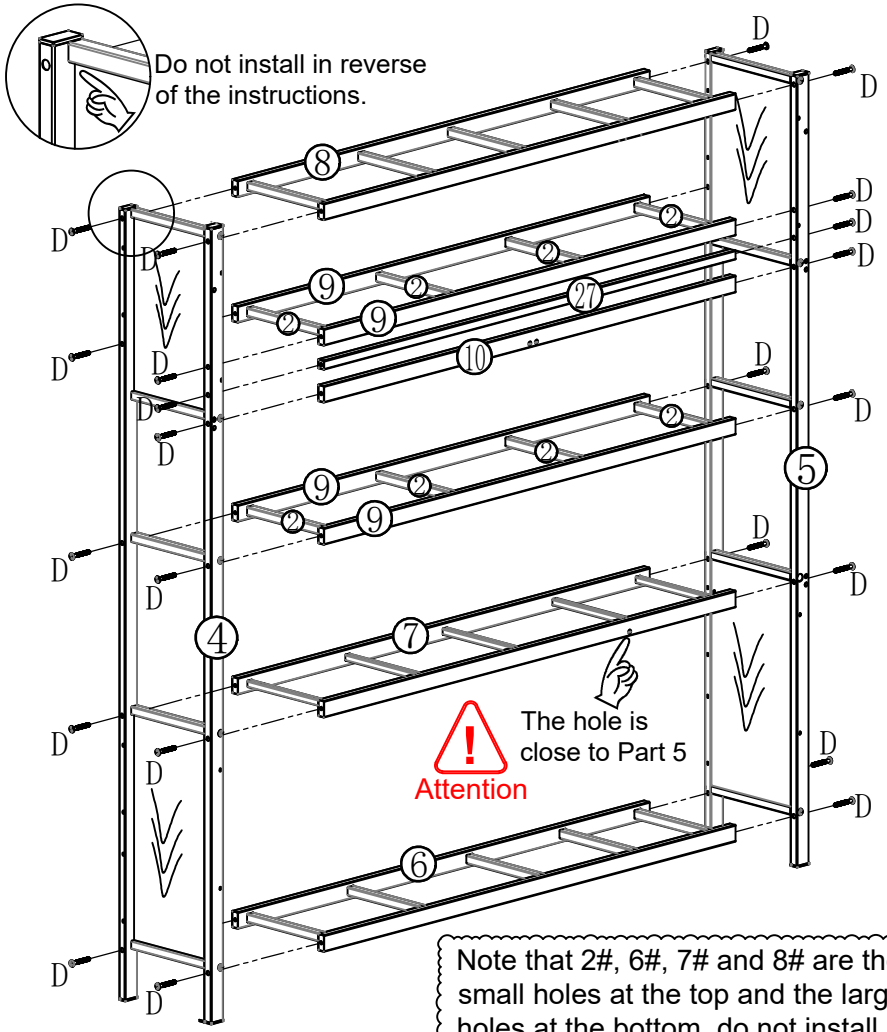


Note that 2#, 6#, 7# and 8# are the small holes at the top and the large holes at the bottom, do not install incorrectly

## Step 4: Use hardware M,O, connect #28,#30 and #32 to the previously installed components.

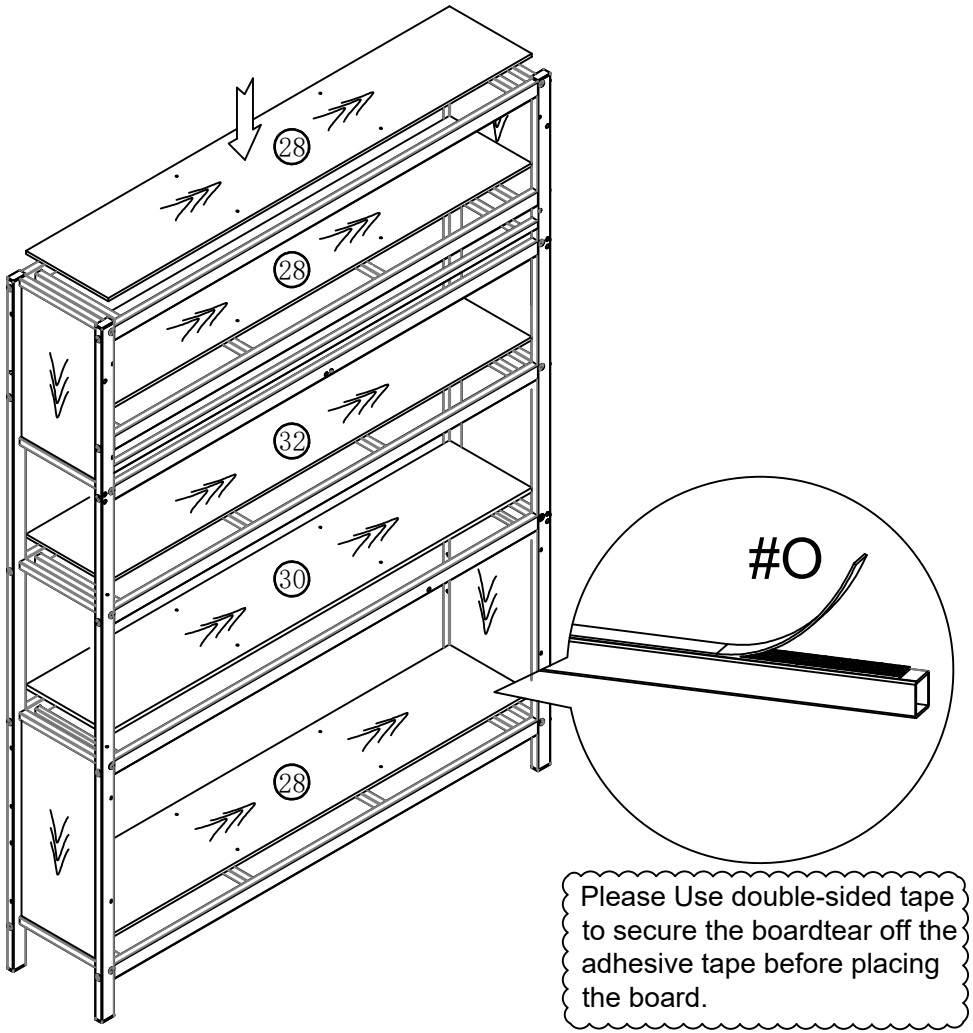


Please Use double-sided tape to secure the boardtear off the adhesive tape before placing the board.

| | | | | | | |
|---|---|---|---|---|---|---|
| 4-1pcs | 7-1pcs | 8-1pcs | D 8*55-24PCS | 28-3pcs | 30-1pcs | O 1PCS |
| 5-1pcs | 6-1pcs | 9-4pcs | L | 32-1pcs | | |
| 10-1pcs | 27-1pcs | 2-8pcs | | | | |

Step 5: Use hardware M,G to connect #33 and #34 to the previously installed components.

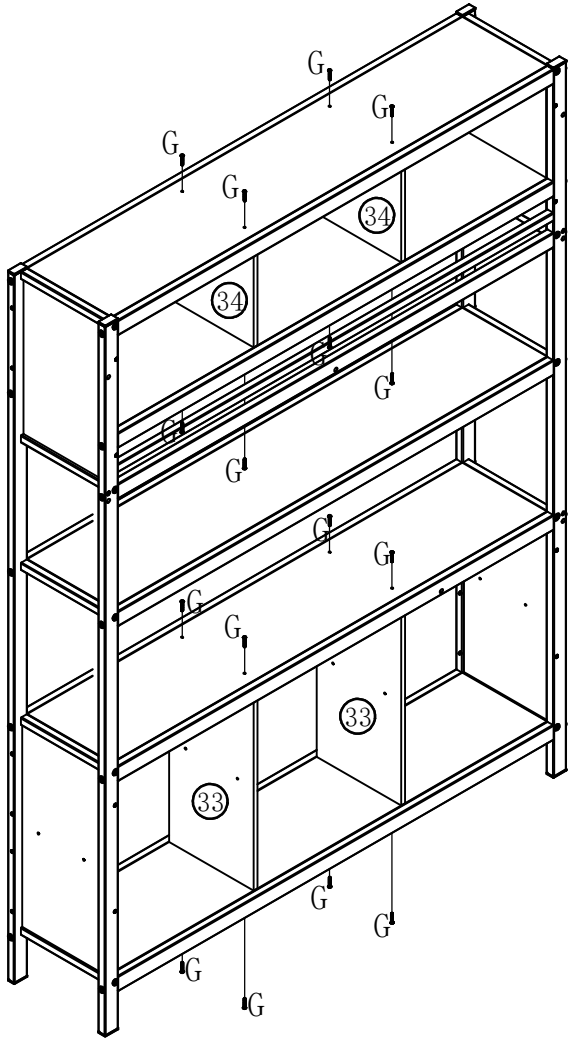


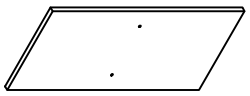

33-2pcs

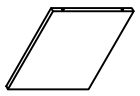

34-2pcs



G
4*35-16PCS



M

Step 6: Use hardware M,H to connect #29 to the previously installed components.

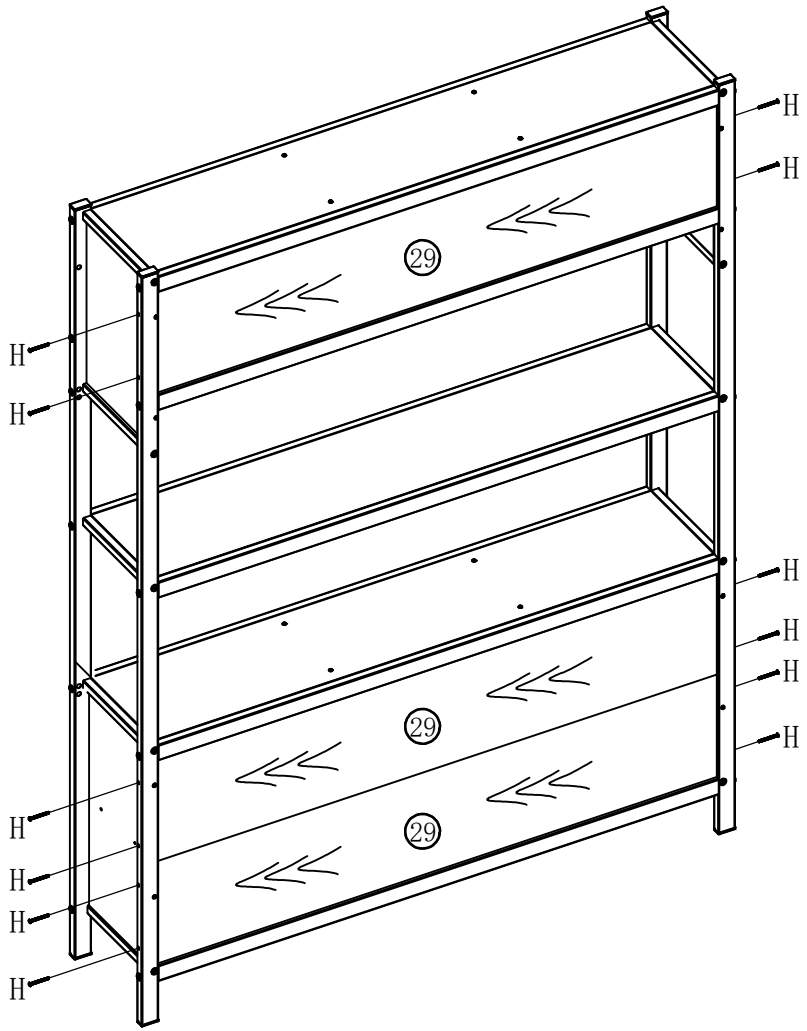


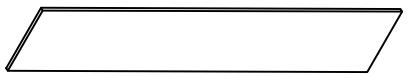

29-3pcs



H
4*50-12PCS



M

Step 7: Use hardware L,M,C,D,H,G to connect #19 ,#20, #21,#22,#23,#24,#36 and #37 to the previously installed components.(Don't get the direction wrong)

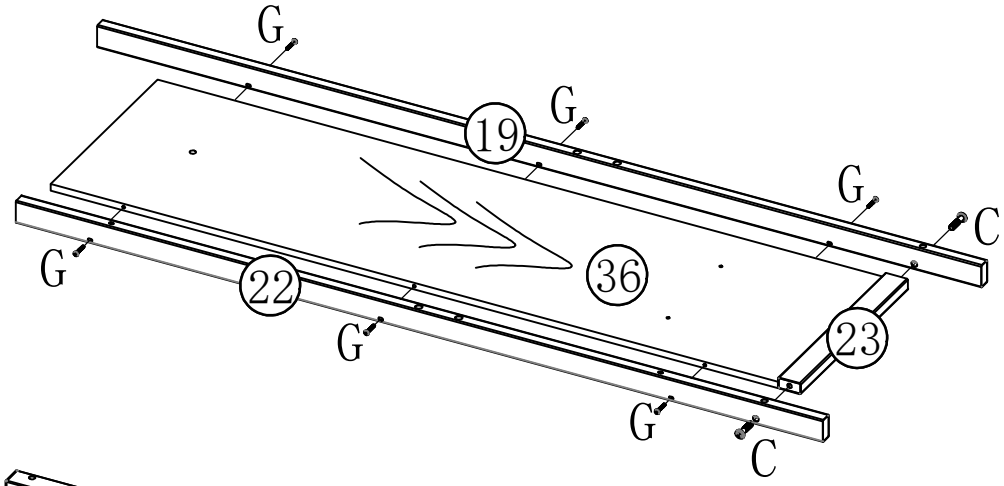


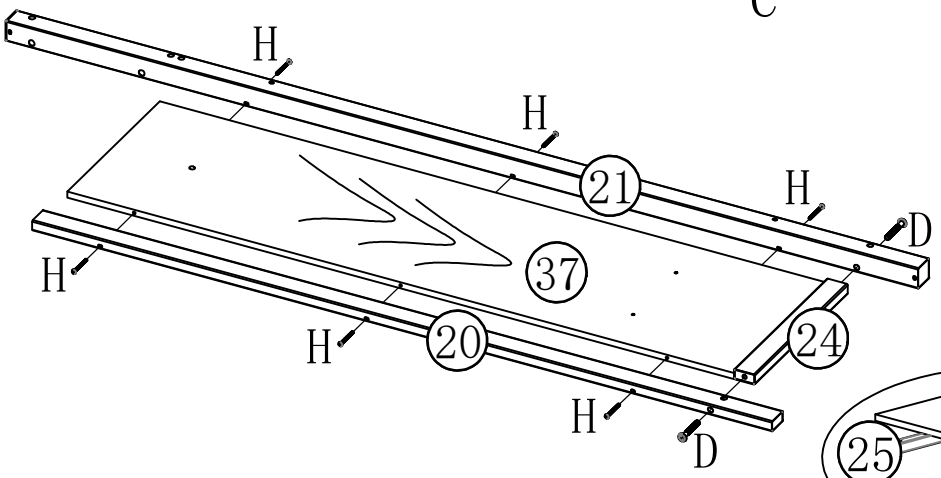


Step 8: Use hardware L,O,M,C,D,H to connect #18,#25, #38,#39 to the previously installed components.(Don't get the direction wrong)

First:

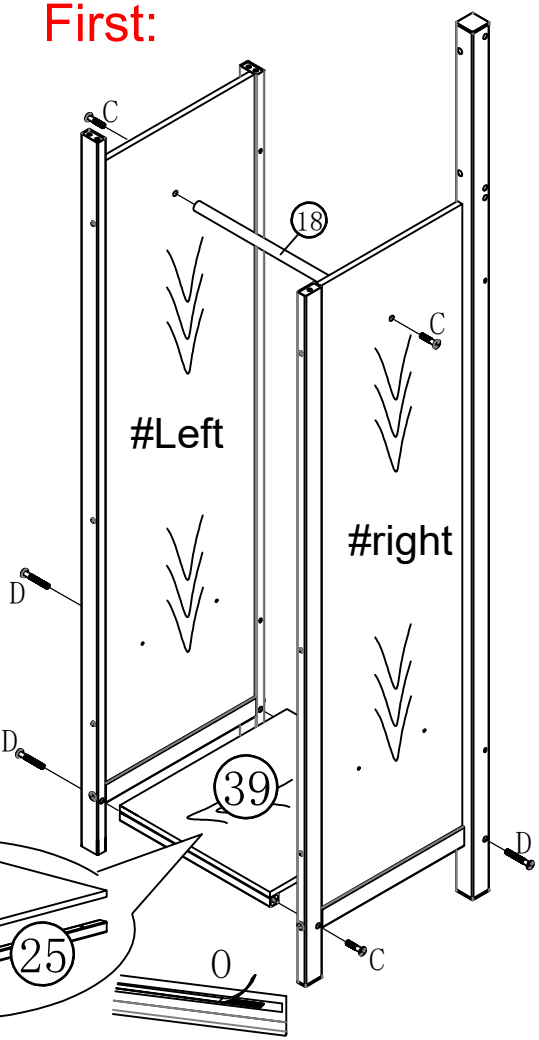


Then (back):

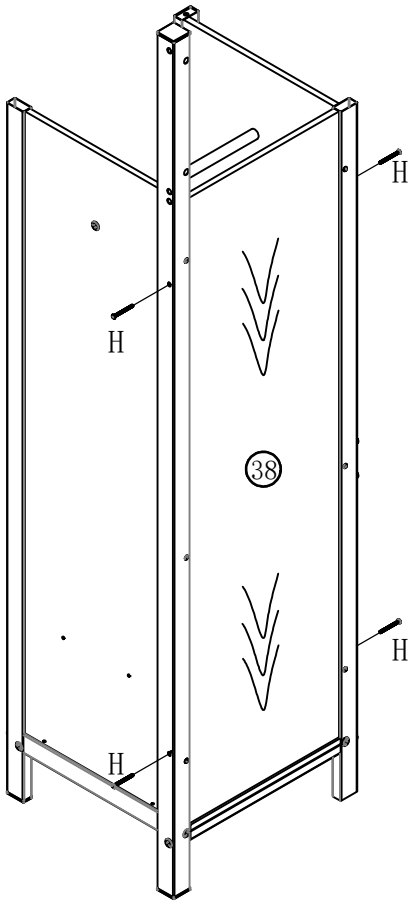


| | | | | | | | | | | | | |
|---|---|---|---|---|---|---|---|---|---|---|---|---|
| 19-1pcs | 21-1pcs | 23-1pcs | C 8*35-2PCS | D 8*55-2PCS | M | 18-1pcs | 25-2pcs | O 1PCS | C 8*35 3PCS | D 8*55 3PCS | H 4*50 4PCS | M | L |
| 22-1pcs | 20-1pcs | 24-1pcs | G 4*35-6PCS | H 4*50-6PCS | L | 38-1pcs | 39-1pcs | | | | | | |
| 36-1pcs | 37-1pcs | | | | | | | | | | | | |

Step 9: *Install part #K to parts #1，then* Use hardware L,B,C,D,F to connect #1and #17 to the previously installed components.

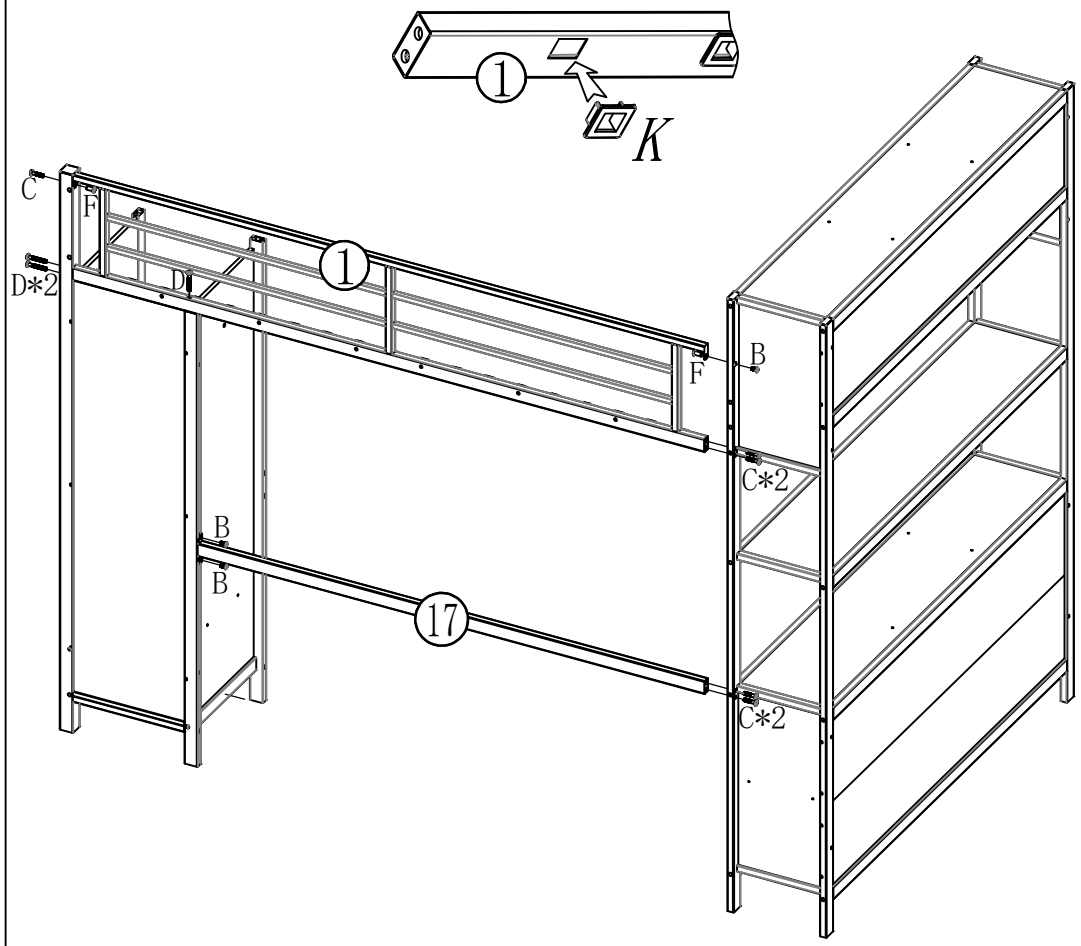


Step 10: Use hardware L,B,C,E to connect #16,#17 and #26 to the previously installed components.

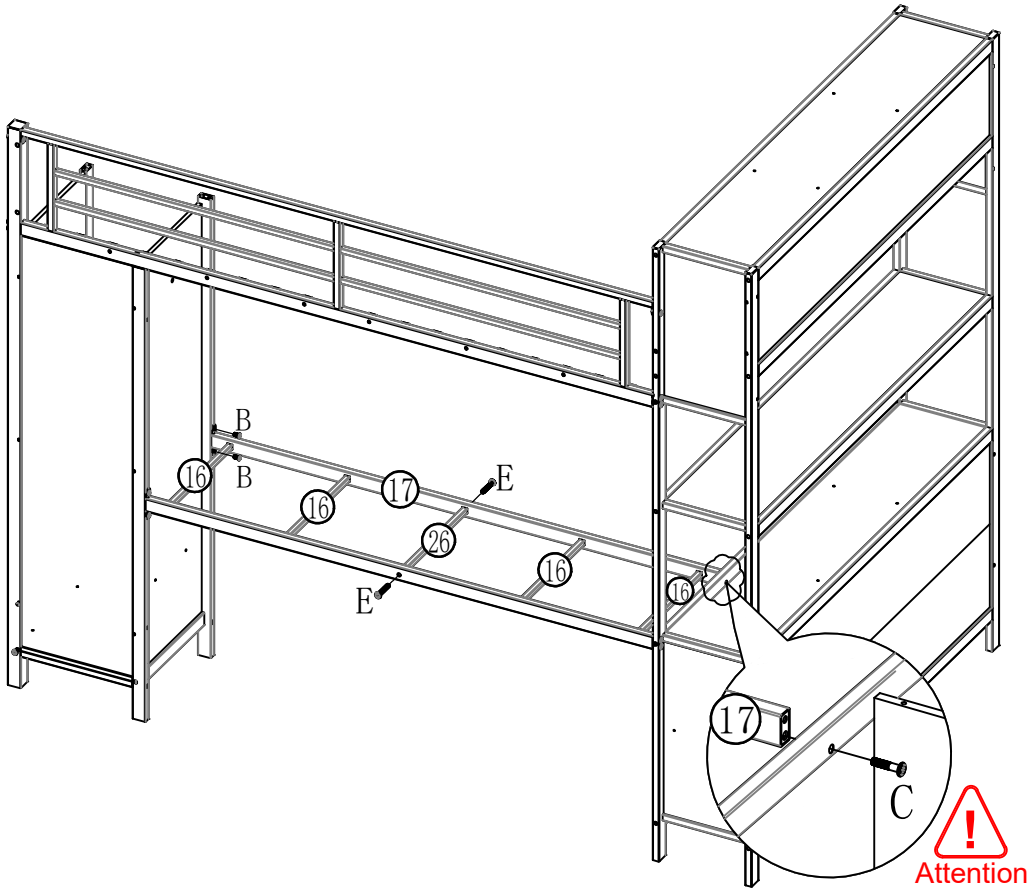


| | | | | |
|---|---|---|---|---|
| 1-1pcs | K 20PCS | B 8*15-3PCS | D 8*55-3PCS | L |
| 17-1pcs | | C 8*35-5PCS | F 8*15-2PCS | |

| | | | | | |
|---|---|---|---|---|---|
| 17-1cs | | B 8*15 2PCS | C 8*35 1PCS | E 6*255 2PCS | L |
| 16-4pcs | 26-1pcs | | | | |

## Step 11: Use hardware M,A to connect #35 to the previously installed components.

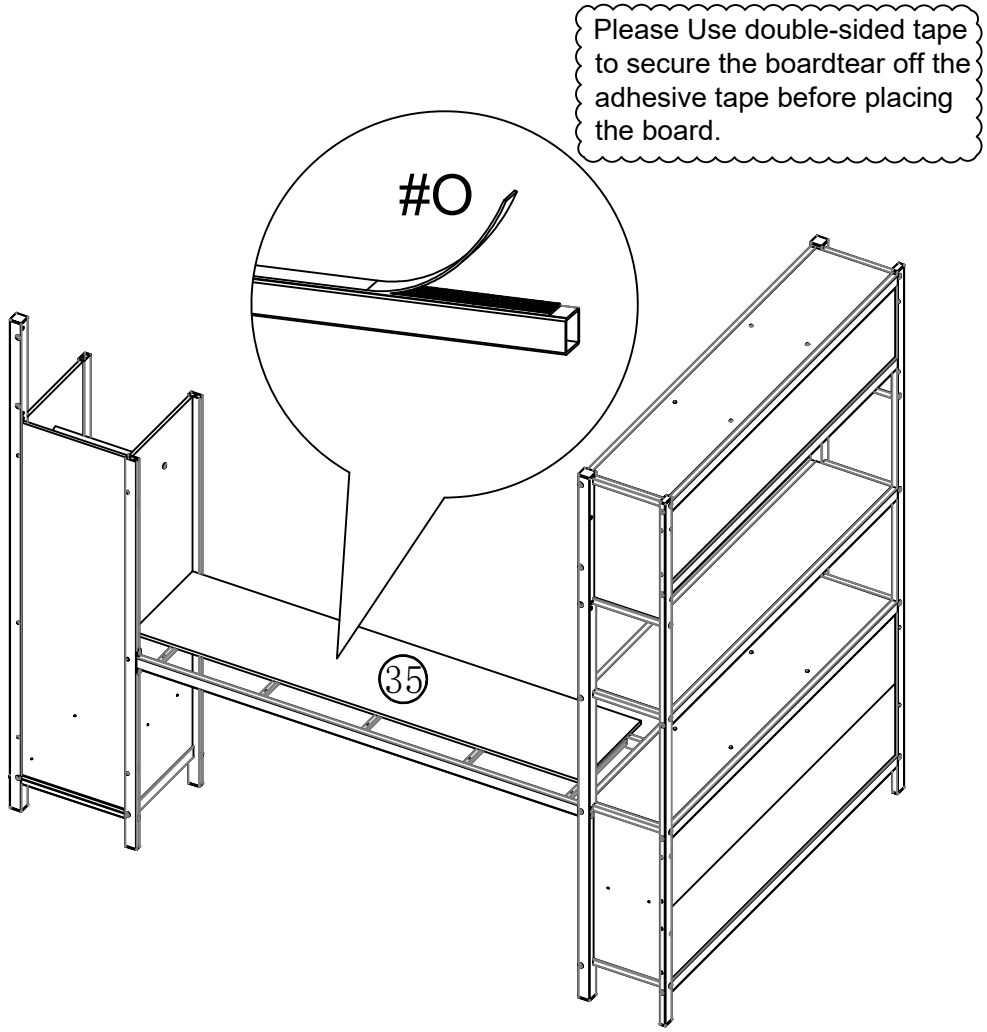


## Step 12: Use hardware L,D ,F to connect #11 and #13 to the previously installed components.

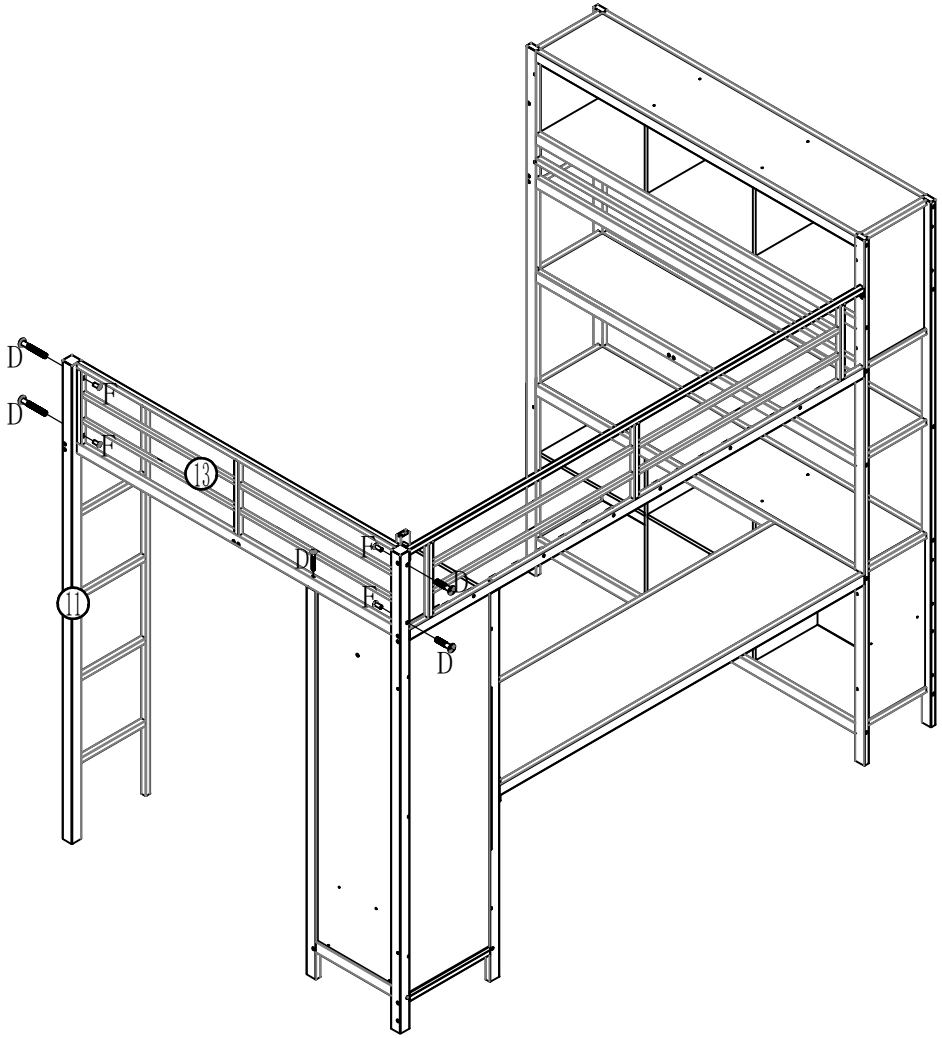


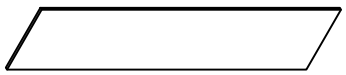

35-1pcs



O

1PCS



M



13-1pcs



11-1pcs



D

8*55-5PCS



F

8*15-4PCS



L

Step13: Use hardware L,C to connect #3 to the previously installed components.

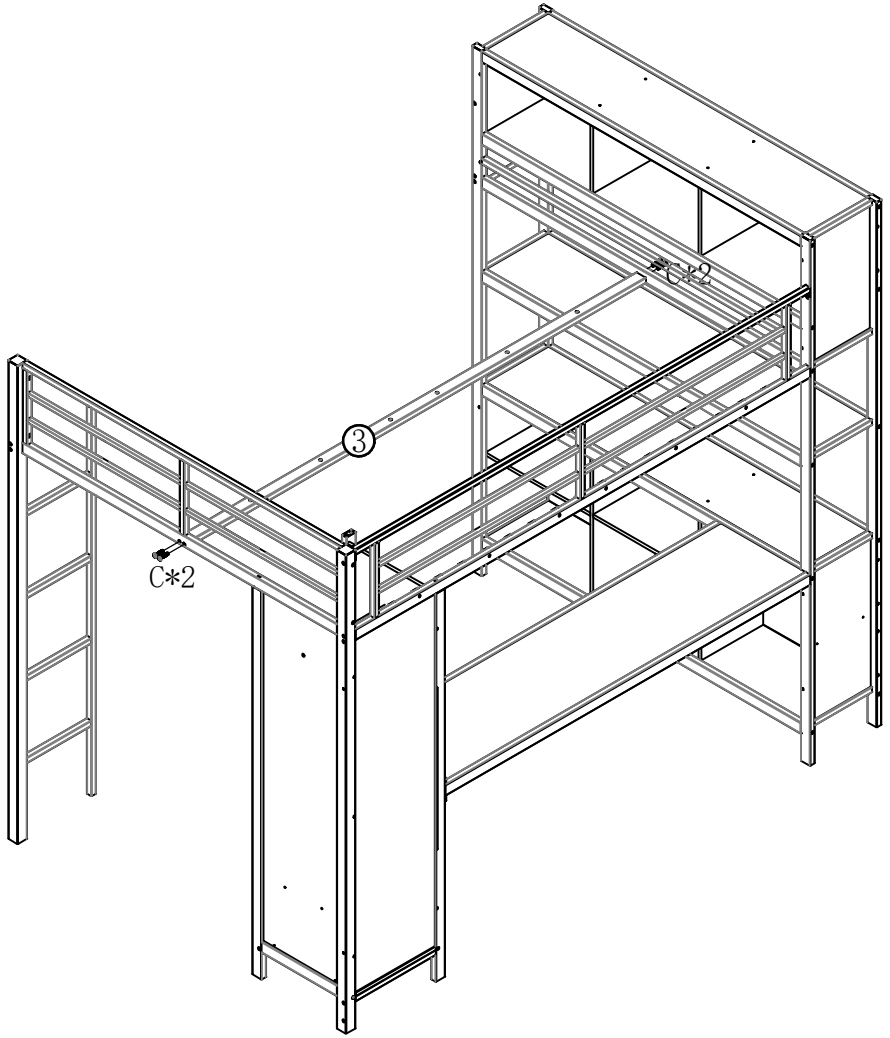




3-1pcs

C

8*35-4PCS



L

Page 19

Step14: Use hardware L,C,E to connect #15 to the previously installed components.

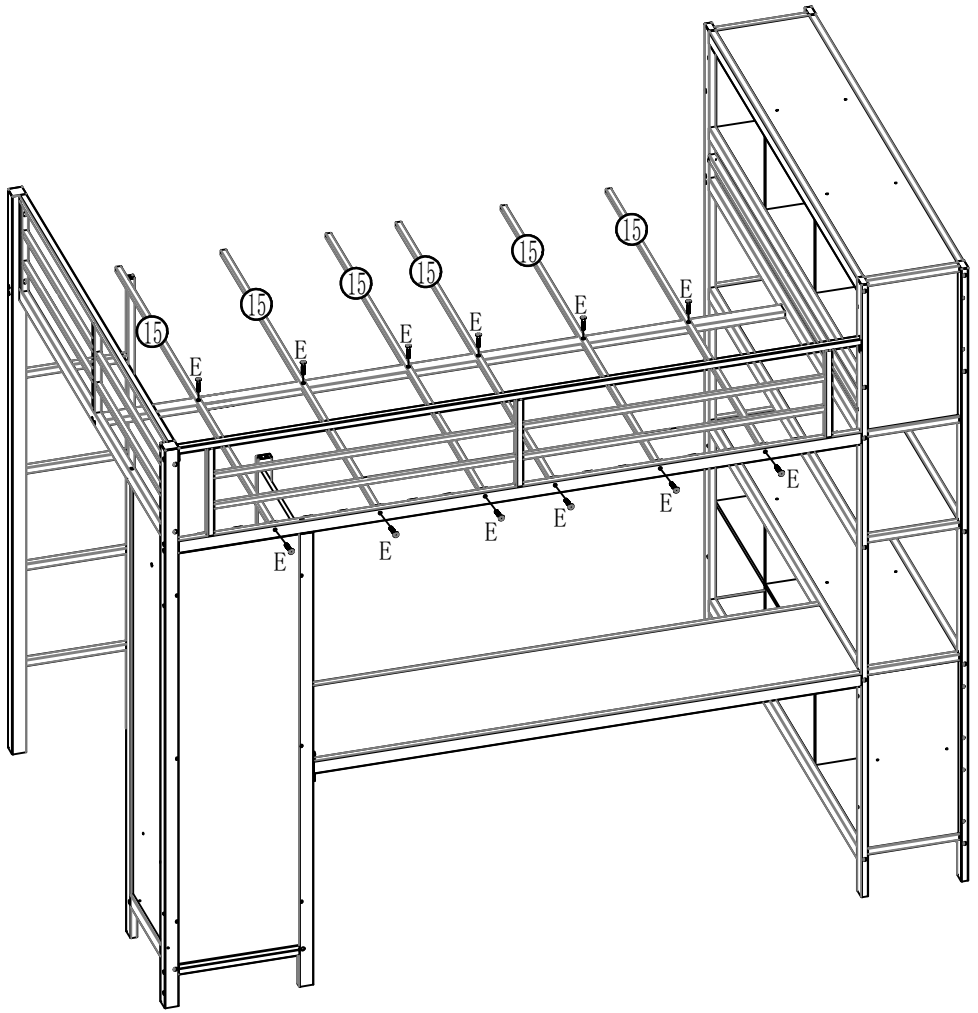




15-6pcs

C

8*35-1PCS

E

6*30-12PCS



L

Page 20

Step 15: Connect #14 to the previously installed components.

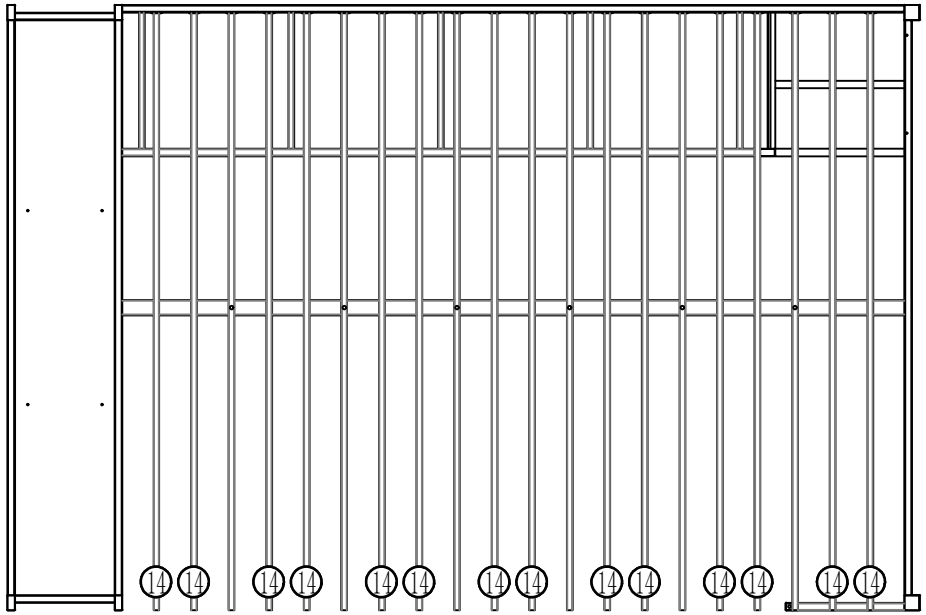


Step16: *nstall part #K to parts #12，Then use* hardware L,C,D,E,F to connect #12 to the previously installed components.

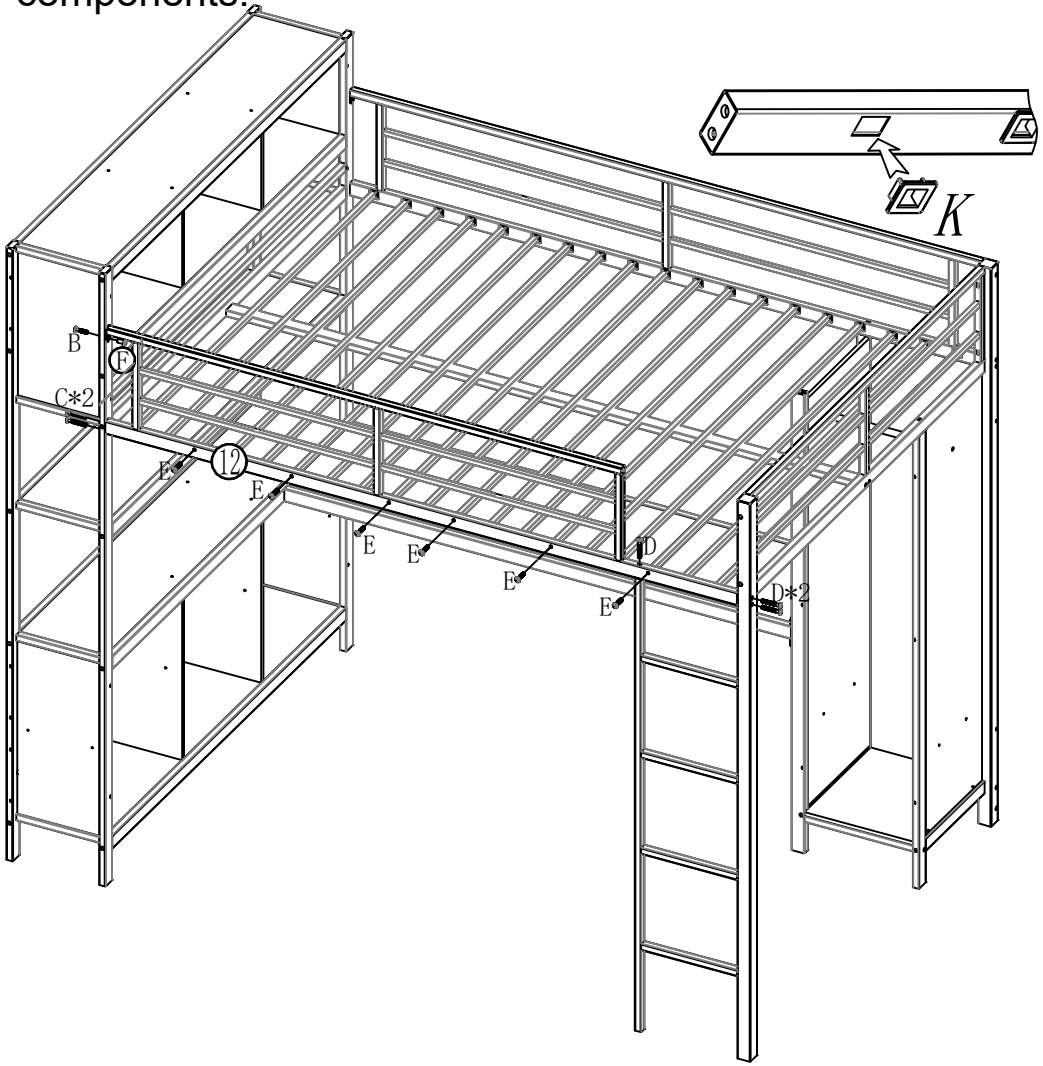


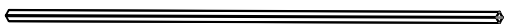

14-14pcs

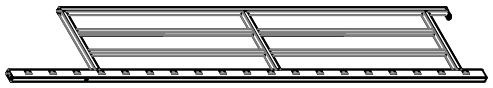

12-1pcs



K-20PCS



F 8*15-1PCS

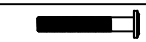

D 8*55-3PCS

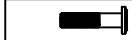

C 8*35-2PCS



B 8*15-1PCS



L



E 6*30-6PCS

Step17: Use hardware J to connect #31 and #40 to the previously installed components.

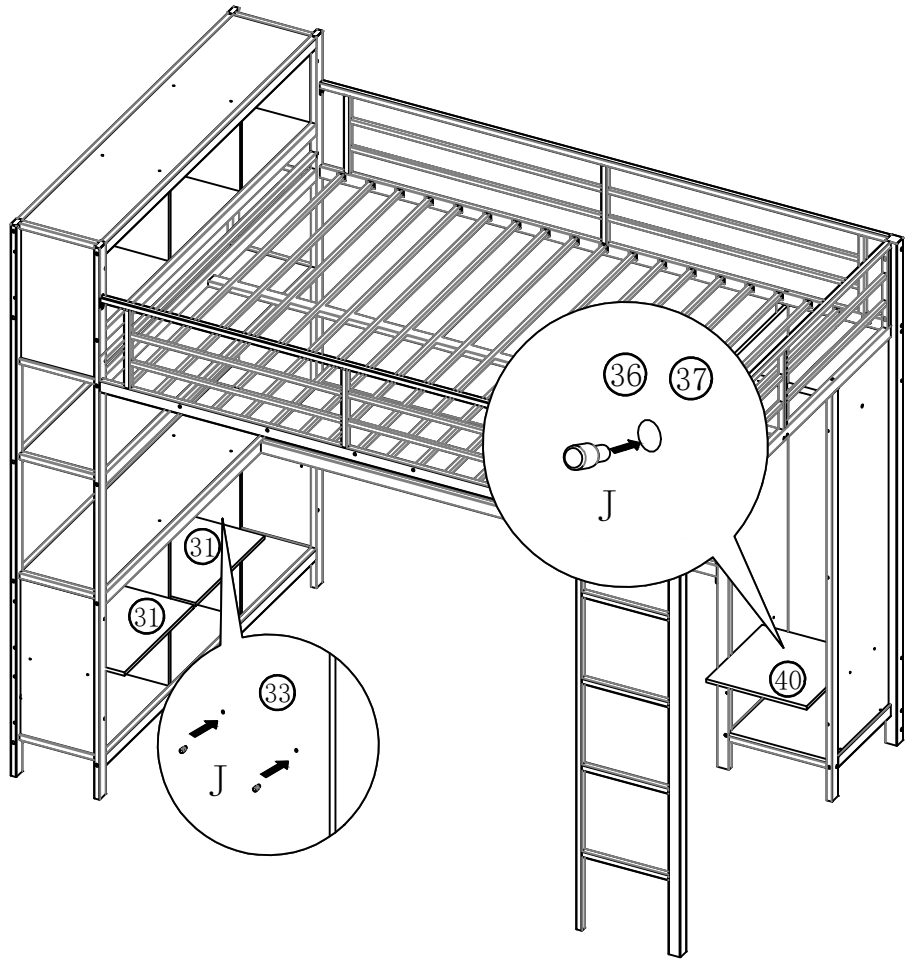


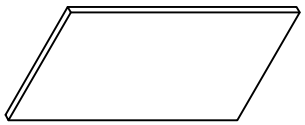

31-2pcs

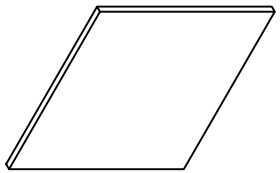

40-1pcs

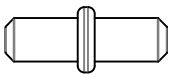

J

5*10-12PCS



# Completed

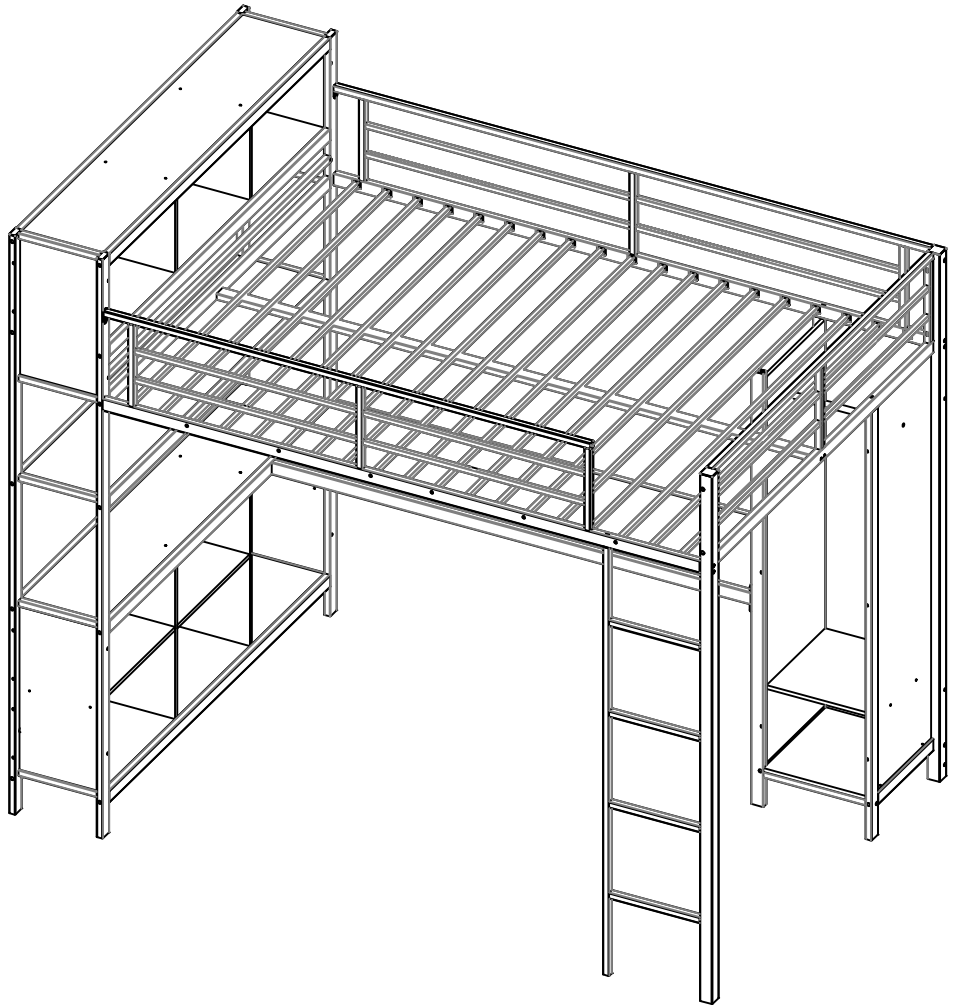

*Please tighten all screws before use, thank you.*