PATIO DINING CHAIR

Instruction Manual

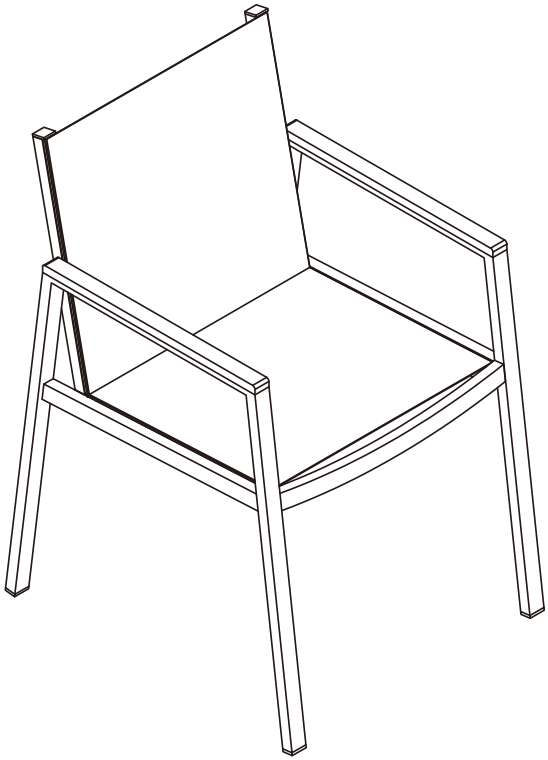

- Excellent weather resistance
- Easy to clean and maintain

Email: wycatwork@gmail.com

Instruction Manual

ASSEMBLYINSTRUCTIONS:

· Our clear, easy-to-follow, step-by-step instructions will guide you through the project from start to finish.

· Do not skip any steps. It is of utmost importance to assemble all of the parts according to the directions.

· Item identi cation: For ease of identi cation, all parts are labeled to correspond to the step number in which the part is used.

IMPORTANT:

· Read following instructions carefully before using the chair.

· Be aware that some parts are heavy and have sharp edges.

· Do not overtighten screws (Insert all screws before tighten screws).

· Firmly secure all bolts, screws and nuts before use.

· Please do not exceed the weight limitations of this item.

· Recon rm that all bolts, screws, and nuts are secure every 90 days.

CARE &SAFETY:

· Always use on rm level ground.

· Keep all children and pets away from assembly area. Children and pets should be supervised while the product is being assembled.

· The assembled product should be located at least 6 feet (2m) from any obstruction such as fence, garage, house, overhanging branches, laundry lines or electrical wires.

· Do not use or store this item in the proximity of open flame or flammable/-combustible chemicals.

· In case of fire, do not attempt to extinguish any burning polypropylene with water.

· Please contact Customer Service if you have any problems or discover any missing parts.

Care & Maintenance

Do not clean furniture with harsh cleansers or polish, avoid using steel wool to clean the furniture.

To obtain the longest lifespan of your outdoor products, minimizing exposure to direct sunlight is recommended.

Children should not climb or jump on the furniture.

To obtain the longest lifespan of your outdoor products, avoid extended and lengthy exposure to rain and snow.Whenever possible cover the product and /or place under patio or awnings.

Stains may be removed with mild soap solution and damp cloth.

Keep away from sources of ignition.

Dust and pick-up spills using a clean,non-colored, lint-free cloth.

Do not use sharp objects on the product surface.

ASSEMBLY PARTS

A 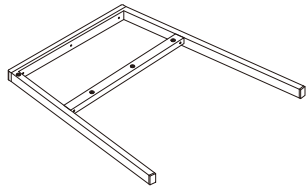	B 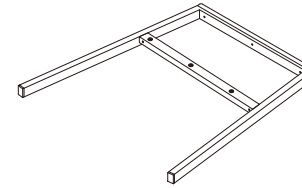
Left Armrest: 1 pc	Right Armrest: 1 pc

C 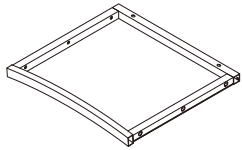	D 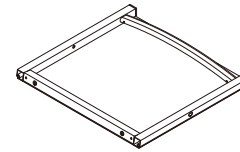
Seat Panel: 1 pc	Backrest: 1 pc

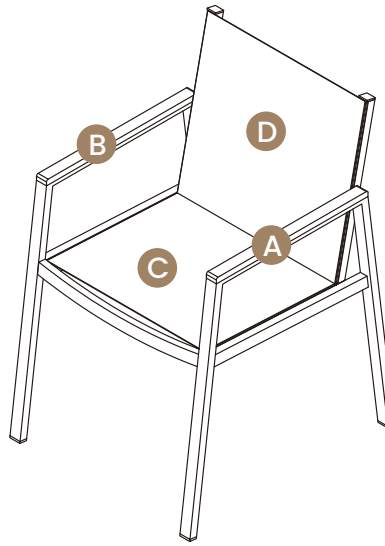

ASSEMBLY PARTS

①	②
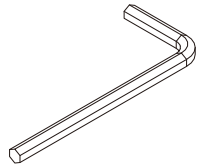	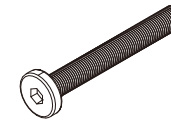
4MM Allen Wrench: 1 pc	M6*40 Screws: 10 pcs

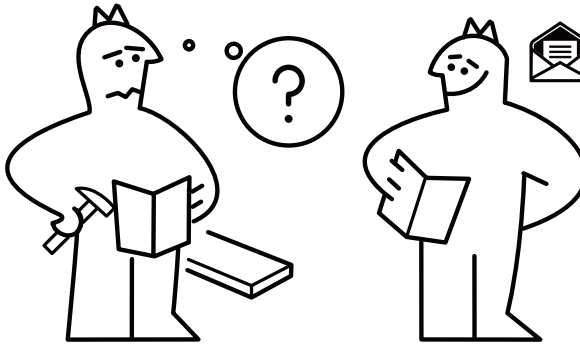

Please contact :
wycatwork@gmail.com

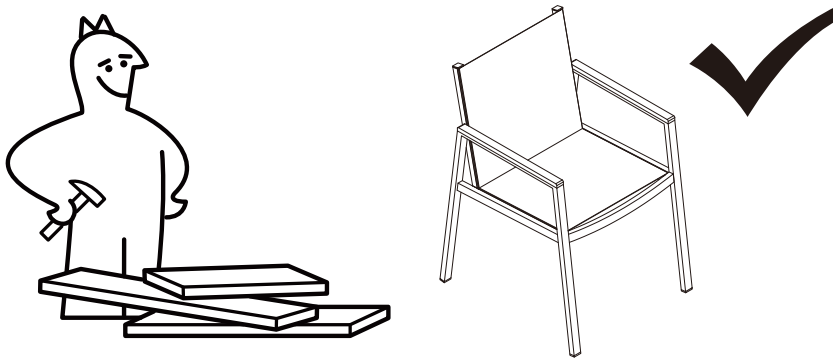

Step 1

Attach the seat panel (C) to the backrest (D) using M6x40 screws (②).
Tighten with the Allen wrench (①).

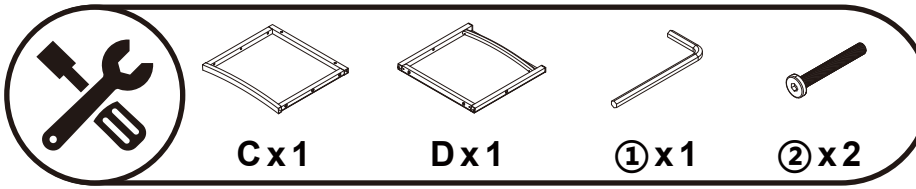

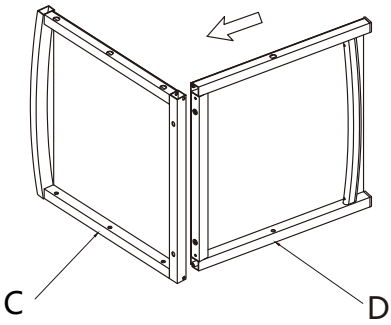

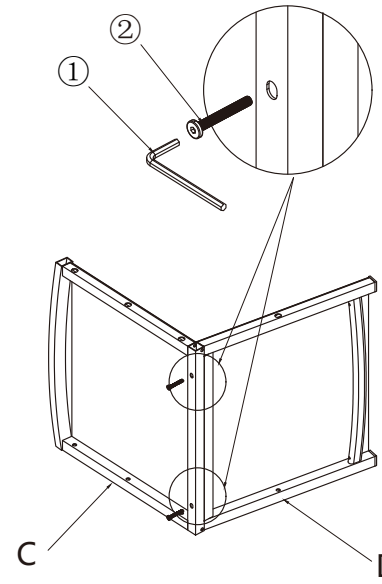

Step 2

Attach the assembled seat panel (C) and backrest (D) to the right armrest (B). Install four M6x40 screws (②) as shown, then tighten with the Allen wrench (①).

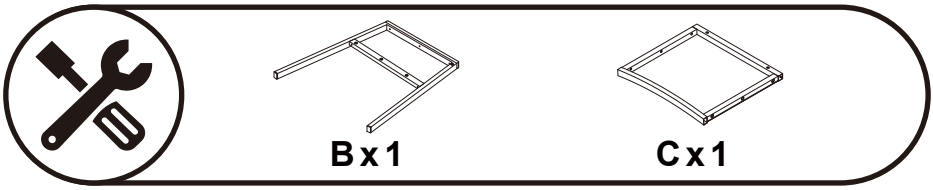

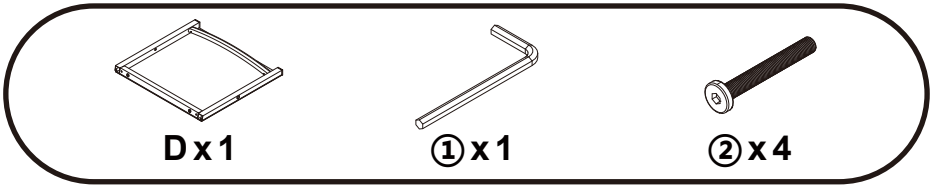

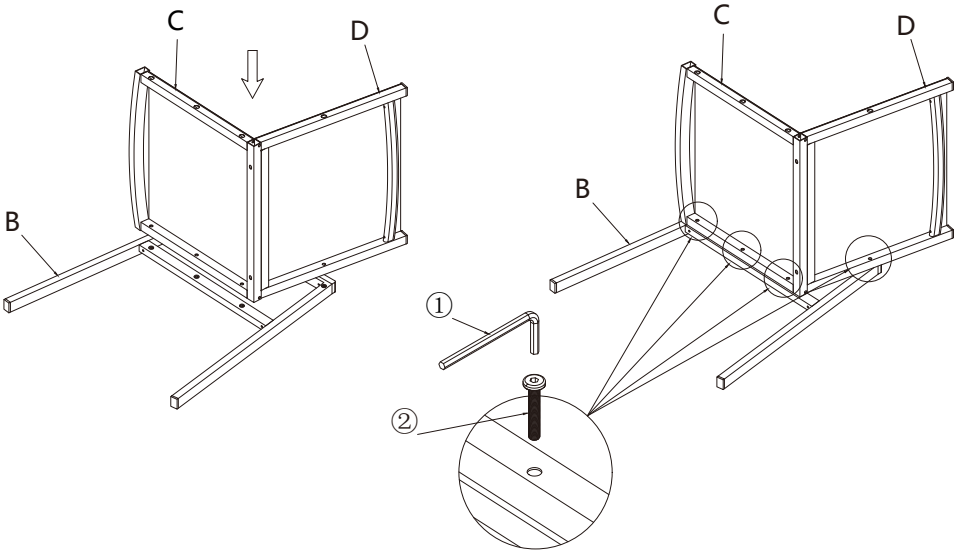

Step 3

Install the left armrest (A) on the opposite side of the armchair. Secure with four M6x40 screws (②) and tighten fully using the Allen wrench (①).

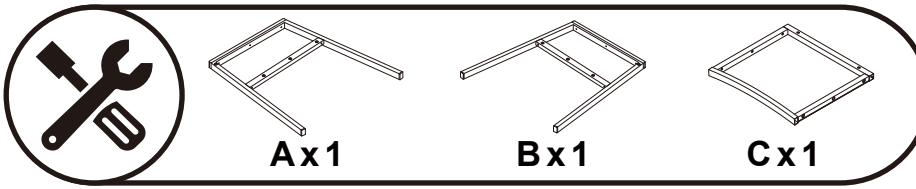

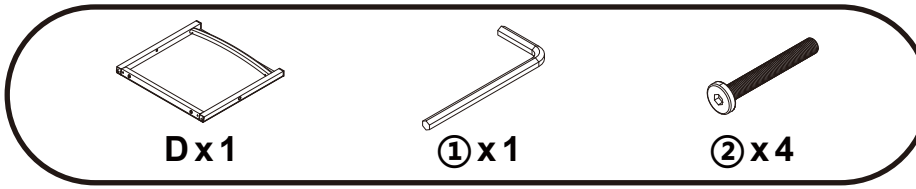

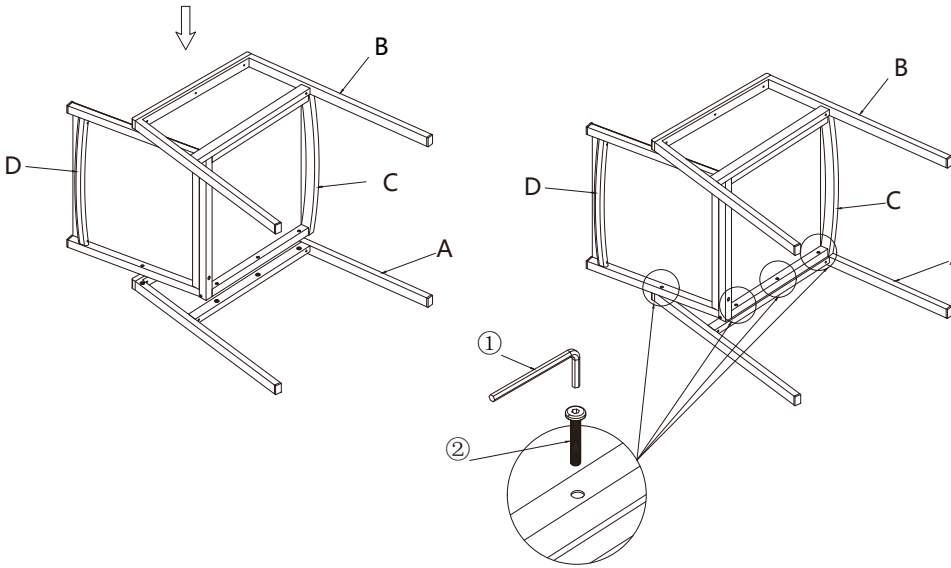

PAY ATTENTION

DO NOT EXCEED THE MAXIMUM LOAD OF *264 LBS*

DONE !

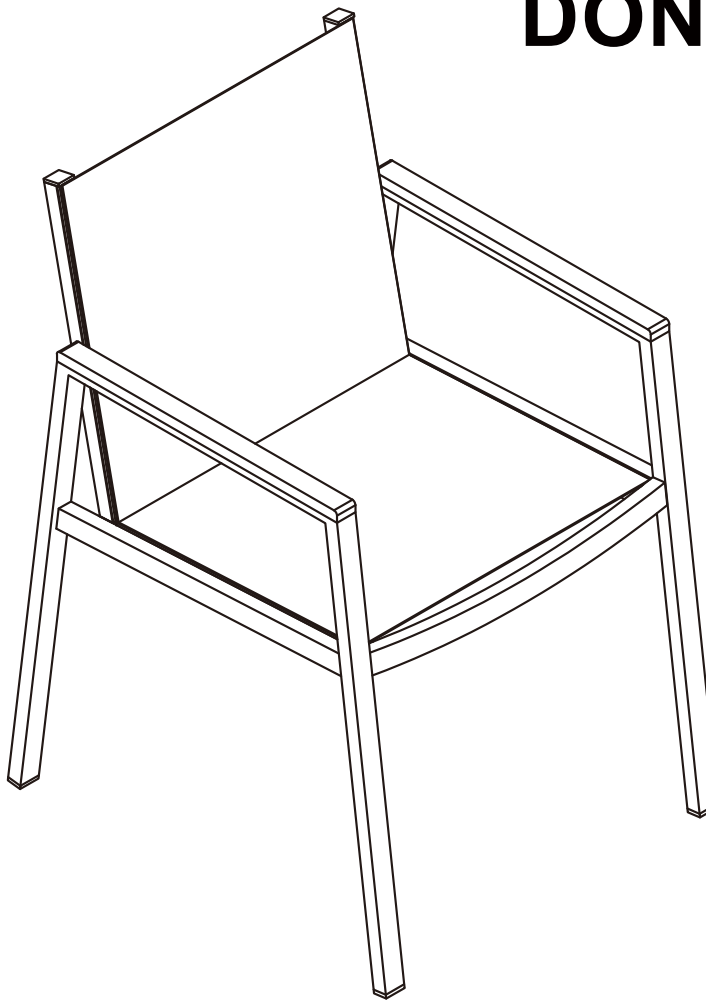

WARRANTY

Patio dining chair
3-year basic Warranty Program

- We offers a 3-year basic warranty on the entire chair from the date of purchase against defects in material and workmanship. During this period we will repair and replace, at our discretion the defective component.

- This warranty does not apply to improperly installed, handled, abused, damaged by user error, nor to any unit which has been repaired or altered by unauthorized repair companies.

- Under no circumstances will the customer entitled warranty to consequential or incidental damages. This limited 3-year basic warranty will only grant customers certain legal rights; customers may have other rights according to different state laws.

HOW TO CONTACT US ON AMAZON?

Step 1:

Log in to your Amazon account.

Step 2:

Go to Your Orders. Select the item you purchased from us.

Step 3:

Select Contact seller.

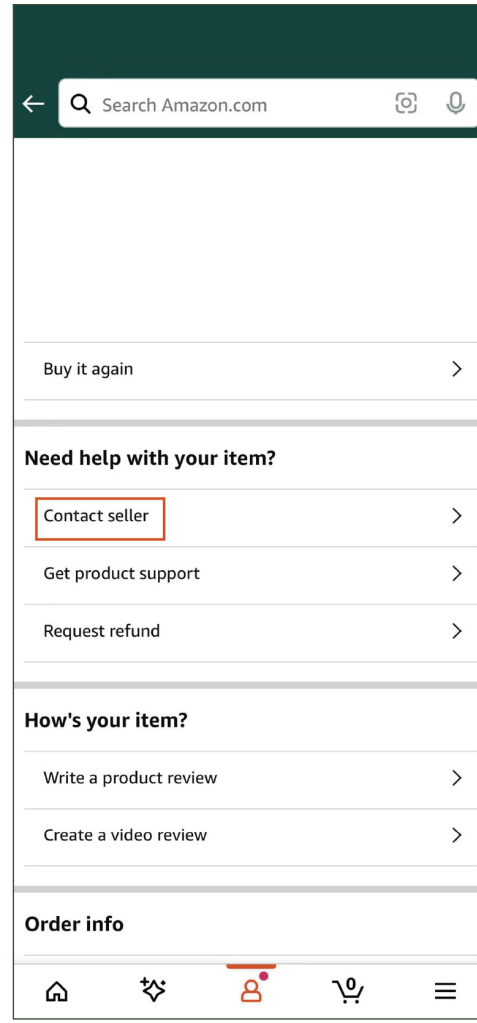

Patio Dining Chair

THANK YOU

FOR YOUR PURCHASE ON US
YOUR SUPPORT MEANS A LOT TO US

Scan to watch installation video
and activate your warranty.

THANK YOU FOR SHOPPING WITH US!

If you have any questions, or need assistance with use, parts, or customer service, please contact: ***wycatwork@gmail.com***. To help us identify your order, please include your 17-digit Amazon Order #.
Our professional team will be there to assist you.

Customer Service Team

CUSTOMER SUPPORT

wycatwork@gmail.com
(Email)

Whatsapp Toll Free