INSTALLATION INSTRUCTIONS

DeerValley®

One-Piece Toilet

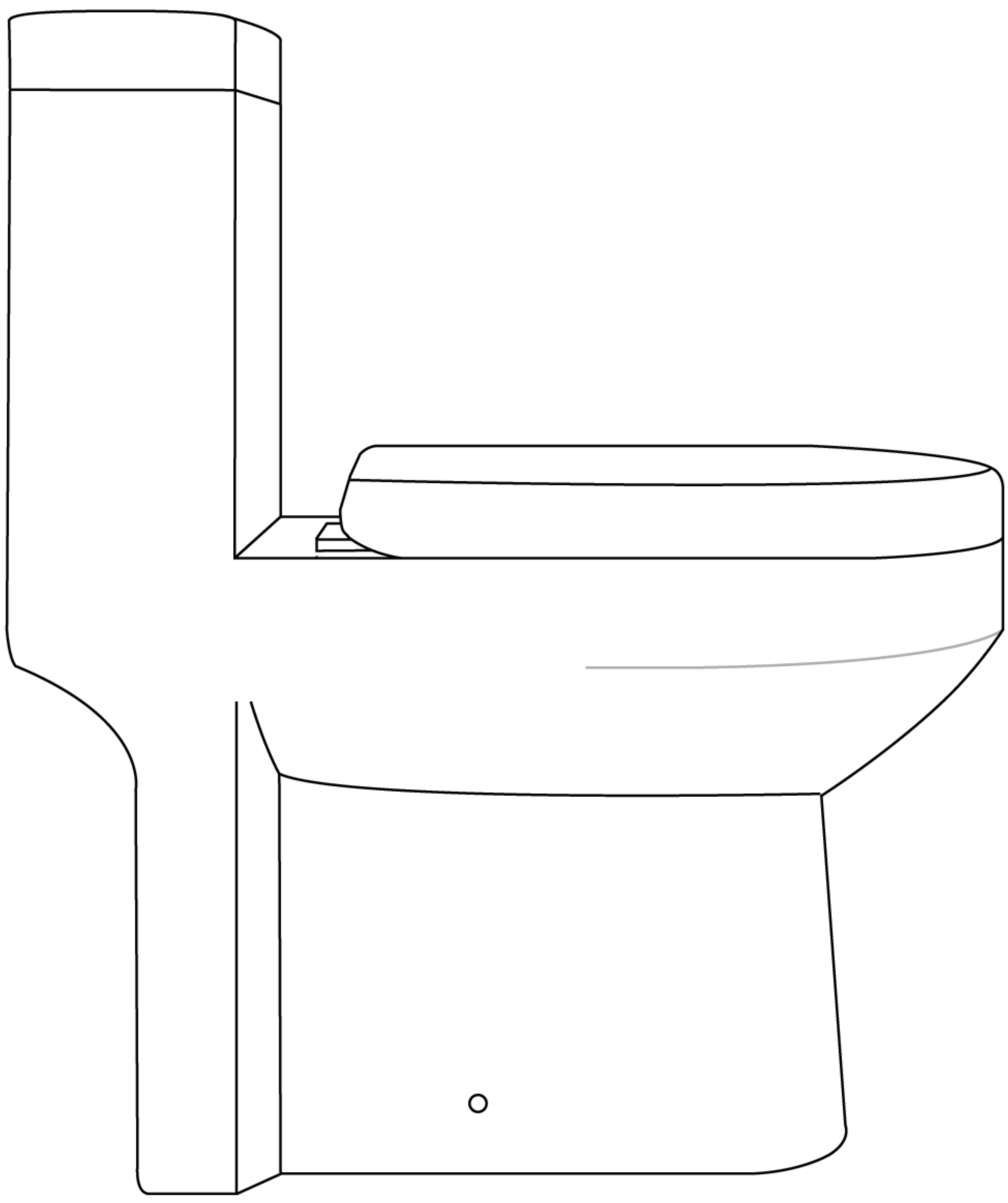

NOTE: Drawings may not exactly define contour of the product.

www.deervalleybath.com | (+1) 312-626-9466 | service@deervalleybath.com

Prior to Installation:

- Inspect toilet to ensure no damages have occurred while in shipping.
- Observe all plumbing and building codes in accordance with your state and local requirements.
- Remove old toilet.
- Make sure mounting surface is CLEAN and LEVEL.

General Recommendations:

Please read installation and maintenance instructions thoroughly before installing the toilet.

Be sure to use proper tools and always wear proper personal safety accessories for your protection.

If you have any questions or concerns please contact us:

(+1) 312-626-9466
service@deervalleybath.com

SUGGESTED TOOLS AND MATERIALS

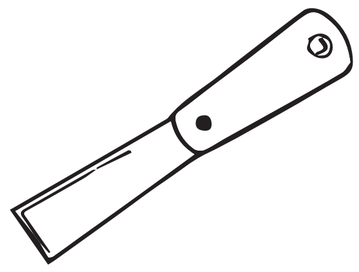

Putty Knife

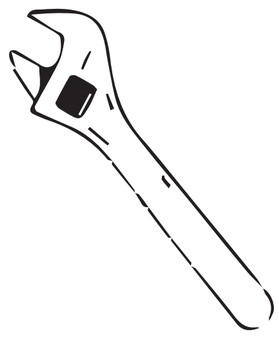

Wrench

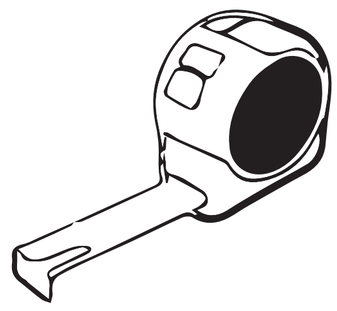

Tape Measure

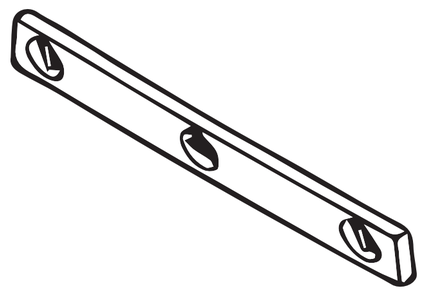

Level

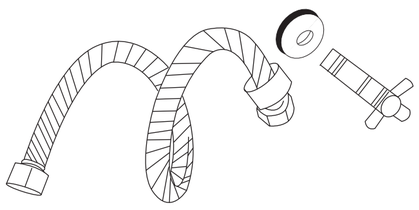

Water Supply Kit

Flat Head Screwdriver

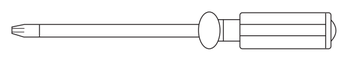

Cross Screwdriver

PARTS LIST

- Push button, tank lid, water fitting, soft-close toilet seat, bolts kit, wax ring, installation instruction.

The step-by-step guidelines in the installation instructions are a general reference for installing a DeerValley One-Piece Toilet. Should there be any discrepancies, DeerValley cannot be held liable. It is recommended to install all DeerValley Products by hiring a licensed professional.

1. Read the complete instruction manual before beginning installation.

2. Confirm that your model will fit in intended location and plumbing fixtures are located where legally required before beginning installation.

3. Not all drawings on this manual are drawn to scale. Please refer to the model chart.

4. Two people are recommended to install and move this product.

5. Product is FRAGILE! To avoid breakage and possible injury handle with care.

NOTE: Specialized tools may be necessary to install DeerValley One-Piece Toilet, plumbing not included.

(+1) 312-626-9466
www.deervalleybath.com

1. Remove Old Toilet

- Turn off the water supply.
- Flush the toilet to empty the tank. Remove any water left in the tank or bowl.
- Disconnect the supply line from the tank.
- Remove decorative caps. Unscrew nuts that attach the toilet to the floor.
- Remove toilet.
- Make sure the water supply valve is shut off before installation.
- Remove old closet bolts from closet flange. Clean any old wax, putty, etc. from base area.

IMPORTANT NOTE REGARDING WATER SUPPLY:

(1) Shut-Off Valve Distance

True 12" rough-in toilet or 10" rough-in toilet from the finished wall to the center of the drain. (Baseboard thickness may reduce rough-in dimension)

To ensure a successful installation, it is recommended that the shut-off valve be installed a distance greater than 7 1/2" from the center of the drain to the center of the shut-off valve.

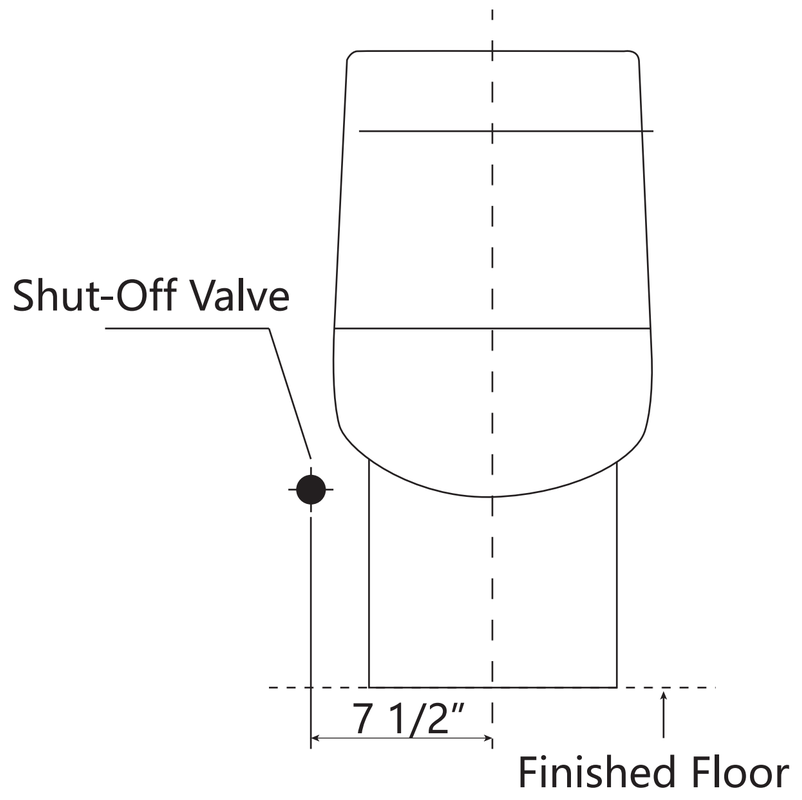

(2) Inlet Valve Adapter Included

The toilet inlet valve connection comes with an adapter so that the size of the water supply line that can be connected is 1/2" and 7/8", please tighten or unscrew the adapter according to your supply line size to connect.

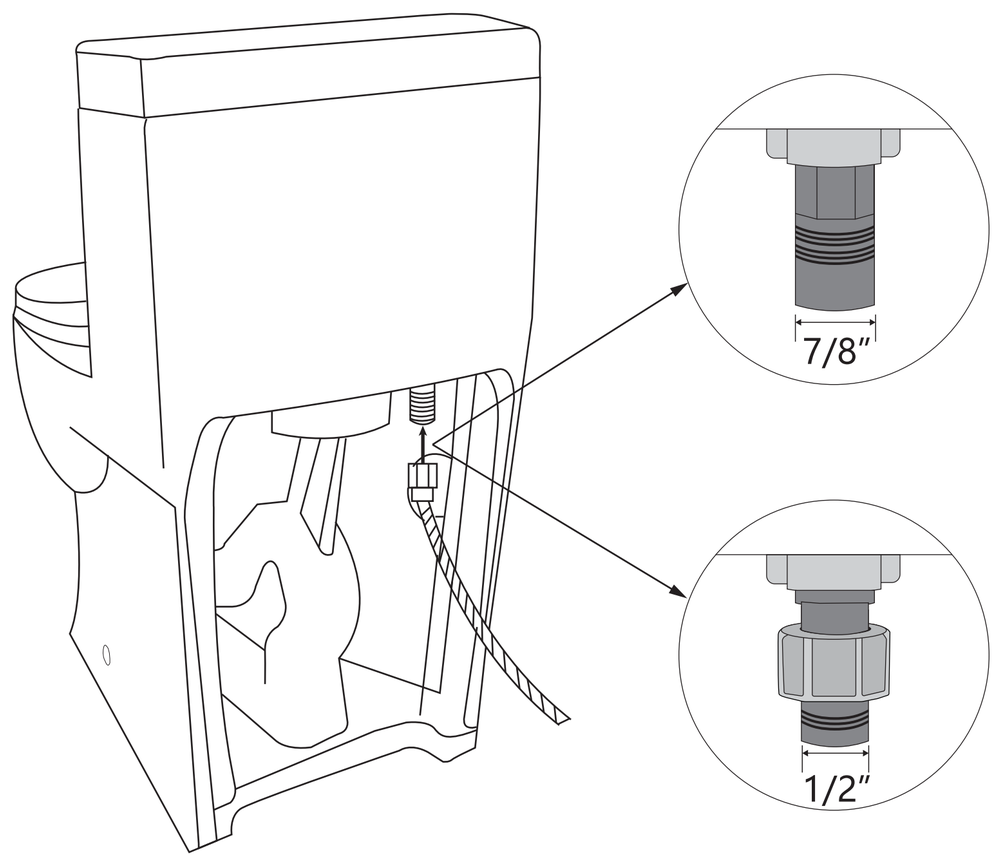

NOTE: Drawings may not exactly define contour of the product.

(+1) 312-626-9466
www.deervalleybath.com

2. Install the Floor Bolts and L-bar

- Install the floor screws to the toilet flange to adjust to the proper position. Please note that the two screws and the center of the flange must be in a straight line.
- Place the L-Bar, washer and nut in sequence and tighten the nut after pulling the L-Bar to its maximum distance.

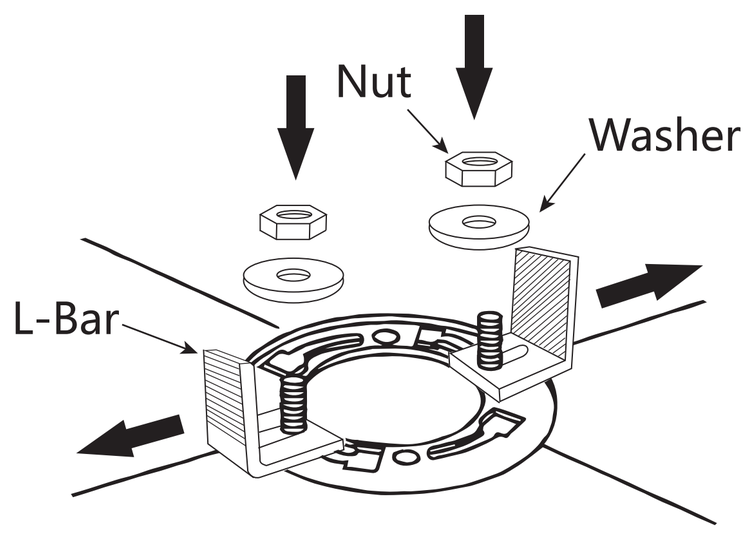

3. Install Wax Ring

- Install the wax ring and adjust the L-bar and fasten it. Please make sure the L-bar in a straight line.

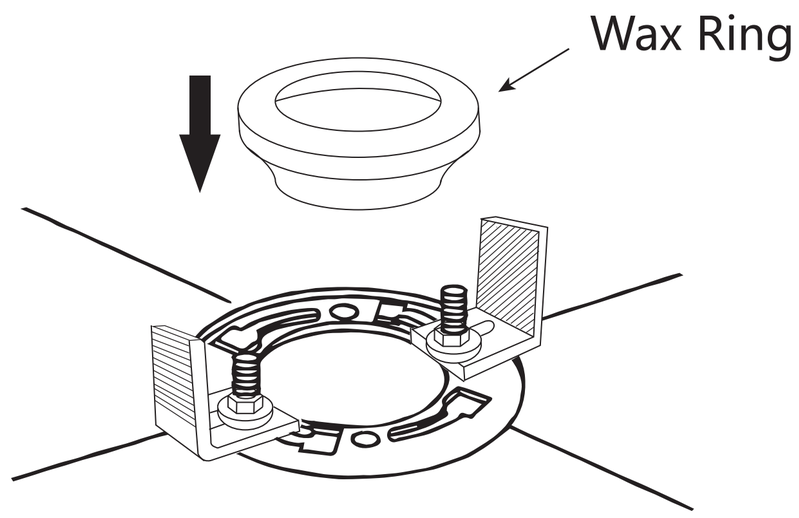

4. Position Toilet on Flange

- Place the toilet on the flange then rock to press the bowl completely tight on the wax ring and flange.
- Attach the screws to the plastic sleeve and install in the two small holes on the side of the toilet, fasten with a cross screwdriver and then install the cap.

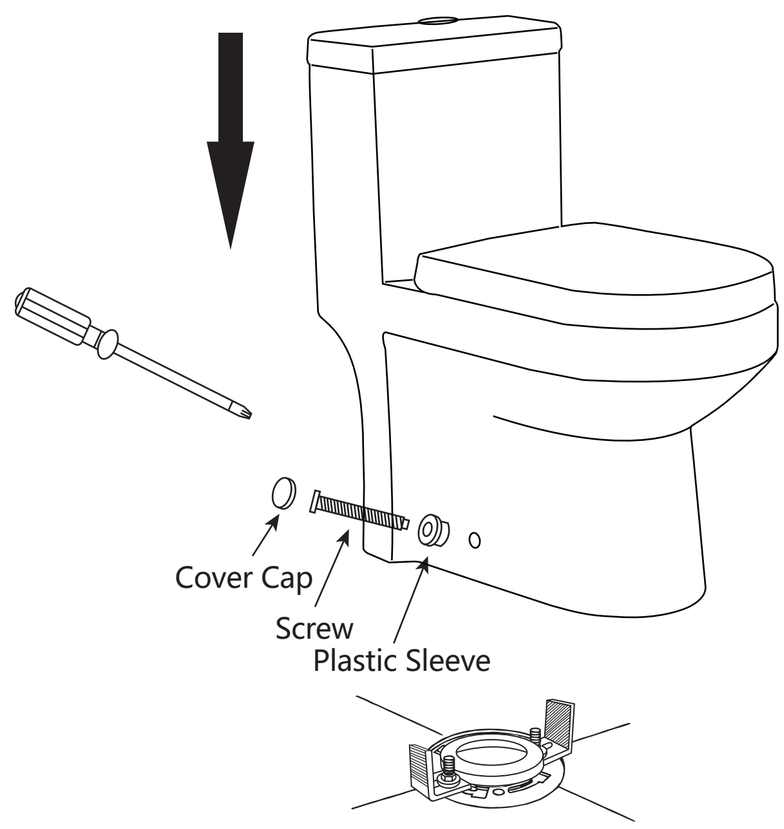

5. Install Toilet

- Connect the flexible water supply line (not included) to the shut-off valve and perform a flush test to check for leaks.

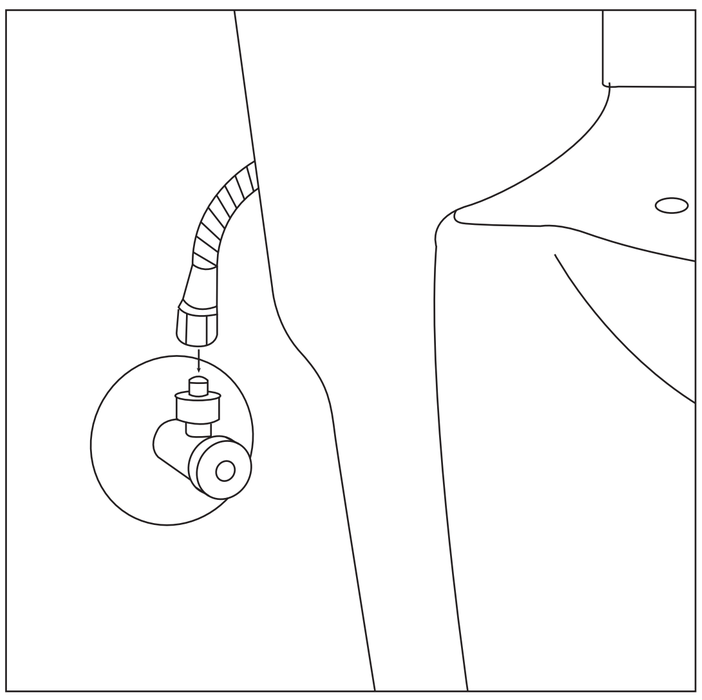

NOTE: Drawings may not exactly define contour of the product.

(+1) 312-626-9466
www.deervalleybath.com

6. Toilet Seat Installation

- **DV-F816S01 Toilet Seat Installation Package**

(1) Accessories

Unwrap the toilet seat installation package.

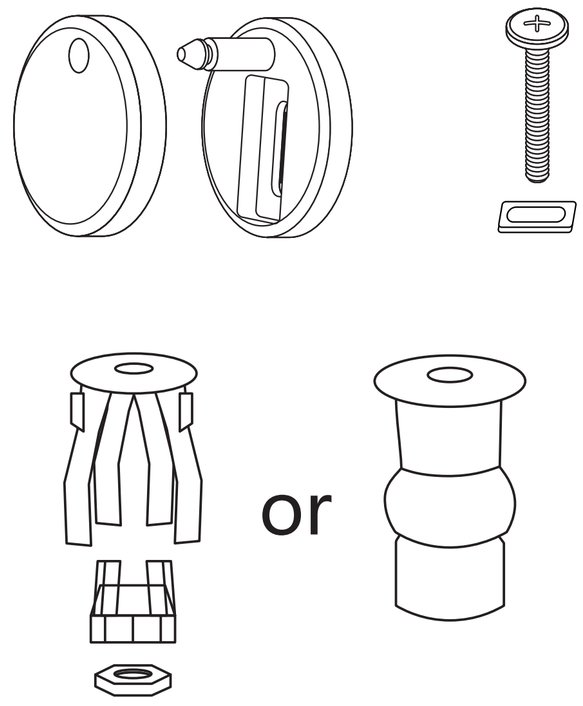

(2) Install Accessories

Install the seat cover cap and hinge, then fasten the screws slightly and adjust the angle of the pins on the hinge.

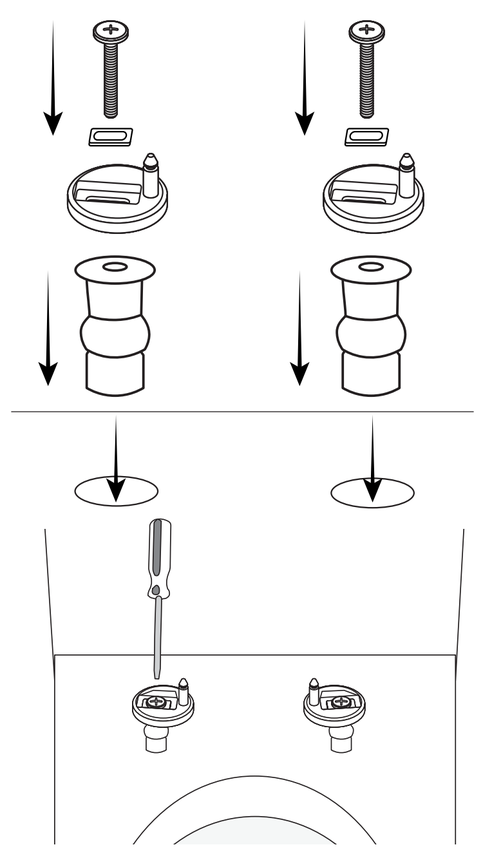

(3) Adjust the Seat Position

Plug the toilet seat in and adjust the position properly.

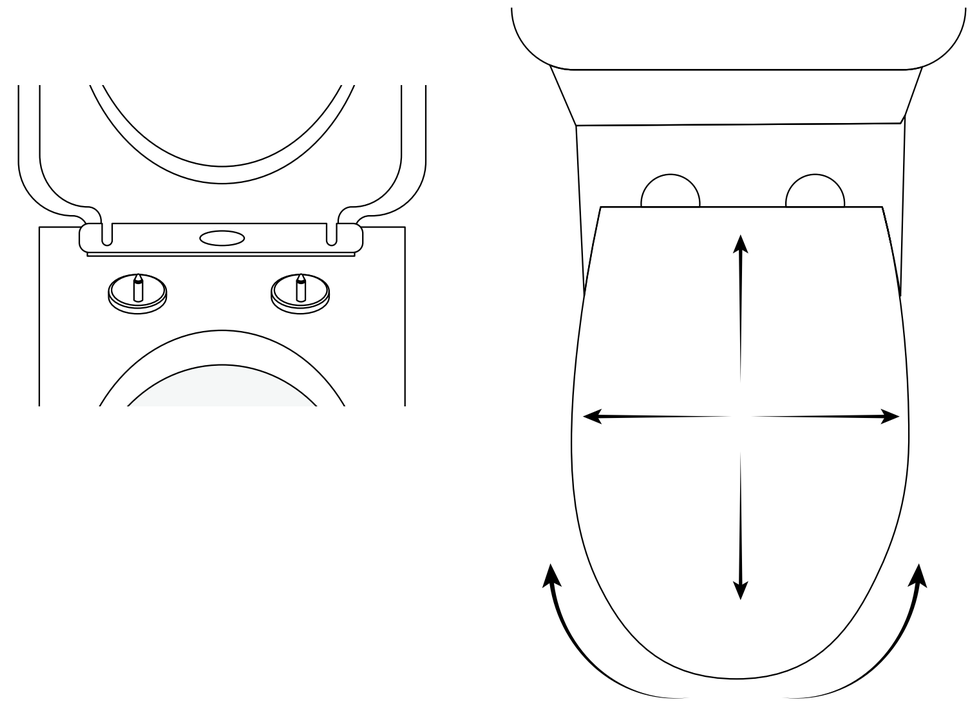

(4) Install the Seat

Confirm the position of the toilet seat and take it out, fasten the screws and put the hinge caps on, then install the toilet seat.

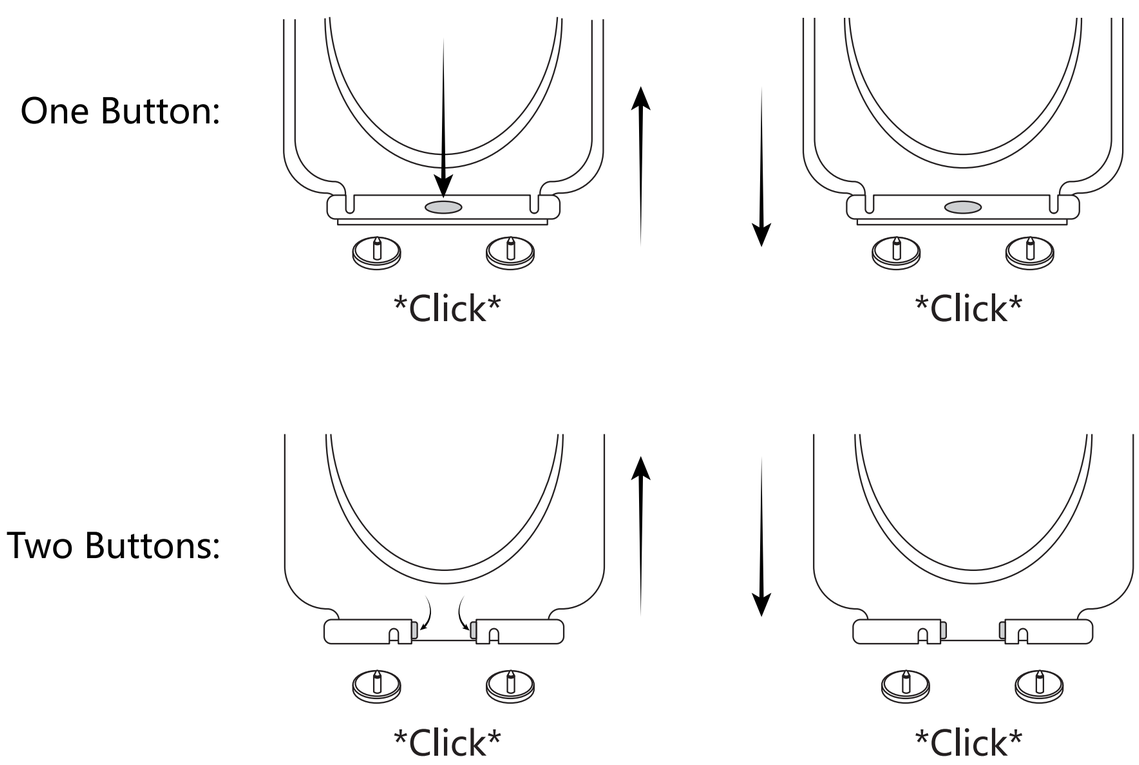

NOTE: Drawings may not exactly define contour of the product.

(+1) 312-626-9466
www.deervalleybath.com

● DV-F812S01 Toilet Seat Installation Package

(1) Accessories

Unwrap the toilet seat installation package.

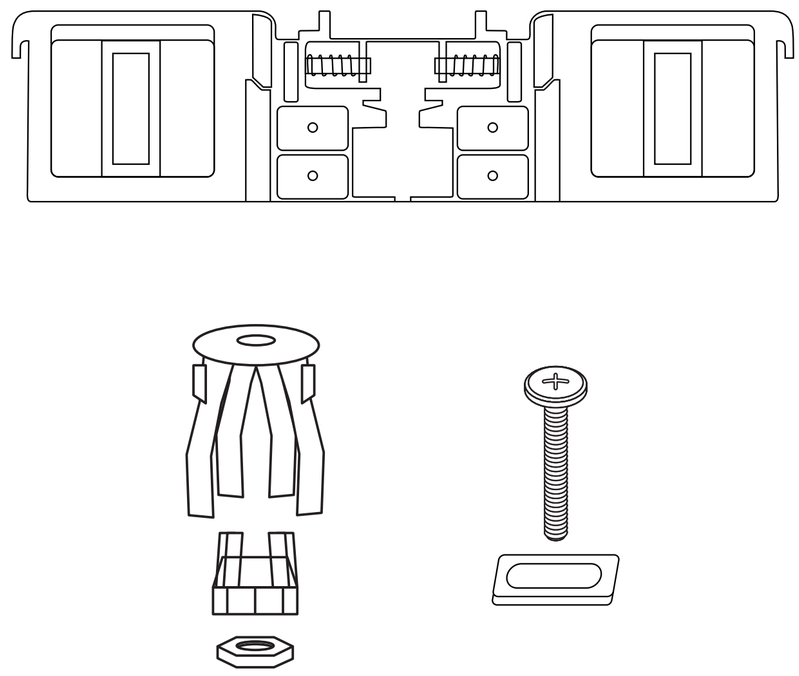

(2) Install Accessories

Install the toilet seat white base, then fasten the screws slightly and install the toilet seat.

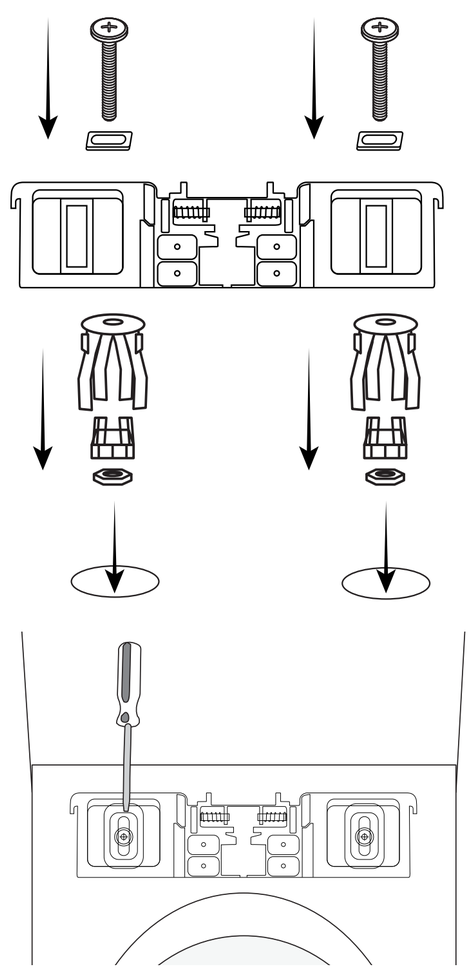

(3) Adjust the Seat Position

Plug the toilet seat in and adjust the position properly.

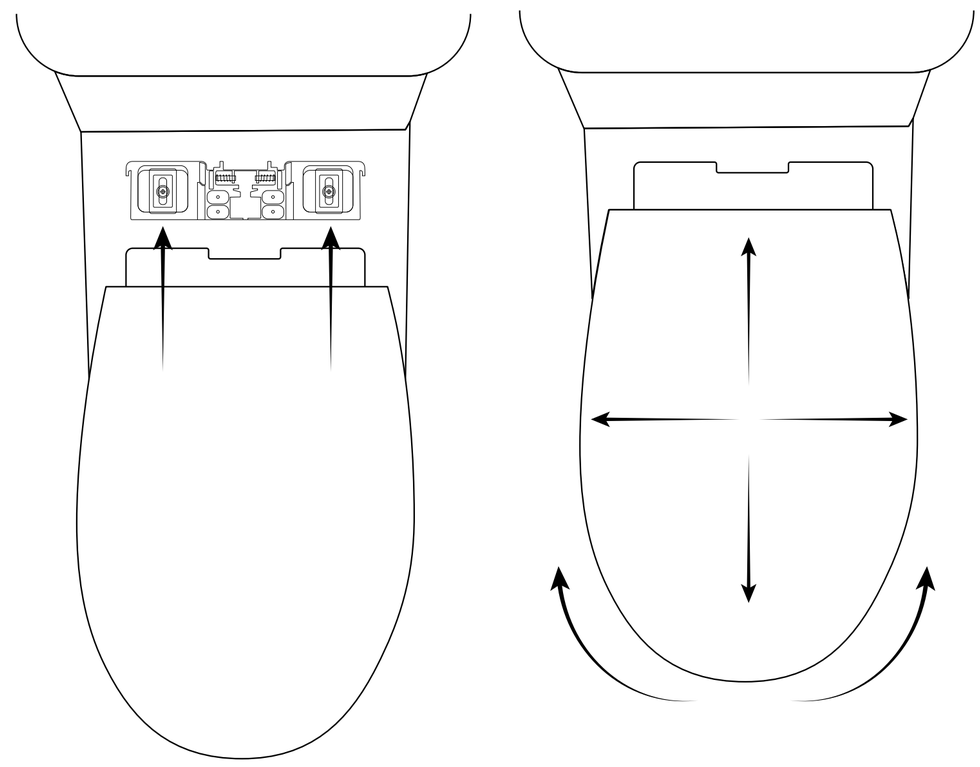

(4) Install the Seat

Confirm the position of the toilet seat and take it out, fasten the screws to finally fix the toilet seat.

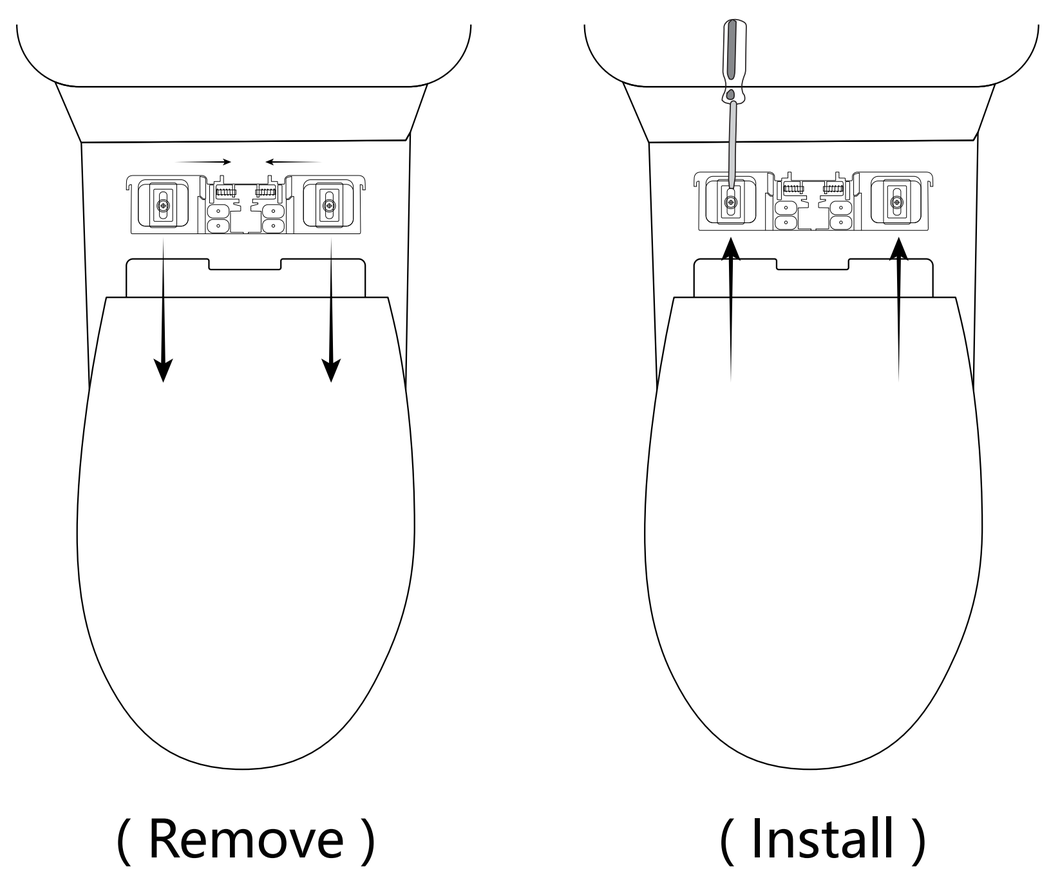

NOTE: Drawings may not exactly define contour of the product.

(+1) 312-626-9466
www.deervalleybath.com

DeerValley®

ONE YEAR LIMITED WARRANTY

Phone: (+1) 312-626-9466
Email: service@deervalleybath.com
Web: www.deervalleybath.com

LIMITED WARRANTY COVERAGE

1 YEAR LIMITED WARRANTY

DeerValley products are made with quality materials and excellent craftsmanship to provide the customers a long-lasting product. In the case of any defects in materials or craftsmanship under regular use were inspected in the first one year of delivery, DeerValley will provide replacement parts at no charge, or at its option, replace any product or part of the product that is deemed defective, under normal installation, use, service and maintenance. This warranty applies only to the original purchaser. Proof of purchase will be required in the case of a claim. SCRATCHES ARE NOT COVERED UNDER WARRANTY.

The manufacturer warrants this product to be free of manufacture defects during the above mentioned warranty time. Please keep a copy of the original invoice as proof of purchase.

DeerValley will, as its option, (1) repair or replace the defective part(s) or product(s) at no charge; (2) issue a refund of the original purchase price of the product(s) (Valid within 30 days from the date of delivery); or (3) issue a credit to be applied toward the purchase of a new DeerValley product shipping/delivery charges may apply and are in DeerValley sole discretion.

DeerValley recommends the installations to be made by a licensed, professional plumber. DeerValley will not be held responsible for any damage or product failure due to improper installation, misuse, or failure to use a licensed professional. DeerValley is not responsible for any removal or installation cost.

This limited warranty shall not apply to goods which have been subject to accident, negligence, improper installation, product abuse, product misuse, or use of cleaners containing abrasives, alcohol or other organic solvents, whether performed by a contractor, service company, or yourself, are excluded from this warranty.

DeerValley responsibility under this limited warranty is limited to only to replacement parts and no other costs. DeerValley will not be responsible for labor charges and/or damage incurred by installation, repair or replacement, nor for any indirect incidental or consequential damages, losses, injury or costs of any nature relating to this product Except as provided by law, this limited warranty is in lieu of and excludes all other warranties, conditions, and guarantees, whether expressed or implied, statutory or otherwise, including without restriction those merchantability of fitness for use.

RESPONSIBILITIES OF OTHERS

Inspecting the unit prior to installation is the responsibility of the installer or building contractor who acts on behalf of the user. They are responsible for ensuring the unit is free of defect or damage.

Notices are placed on and in the unit and on the shipping carton advising the installer of this responsibility.

In the event of a problem, the unit must not be installed. DeerValley is not responsible for failures or damage that could have been discovered, repaired, or avoided by proper inspection and testing prior to installation.

Damage occurring in transit is the responsibility of the carrier. The user or installer MUST open the crate and inspect the unit for damage when it is delivered. If damage is discovered, it must be reported immediately to the seller and the carrier in writing, and an inspection requested. Failure of the carrier to respond should be reported to the seller and the carrier. Your freight claims should be filed promptly thereafter.

LIMITATIONS AND EXCLUSIONS

This warranty does not cover instances of negligence, misuse, abuse, improper installation, carelessness, accident, hard water ormineral deposits, exposure to corrosive materials, misapplication, damages caused by improper maintenance, alteration of theproduct, or failure to follow care or installation instructions enclosed with your product. The warranty becomes invalid if the DeerValley product undergoes any alterations or if attempts are made to carry out repairs using unauthorized accessories or parts from DeerValley.

DeerValley will not be liable for loss of use of the DeerValley products, inconvenience, or any other incidental or consequential costs, expense or damages. Please note that some states do not allow the exclusion or limitation of incidental damages.

DISCLAIMER

Except as expressly provided, there shall be no warranty or obligation, express or implied, oral or statutory. No dealer or other person has the authority to make any warranties or representations concerning DeerValley or its products. In no event shall DeerValley be held respon sible for any such warranties or representations.

WARRANTY SERVICE

NOTE: When requesting warranty, be sure to have the following:

- Copy of original invoice
- Date of installation
- Description and pictures of defect
- Model number or description of model

To obtain warranty service and replacement part, please contact DeerValley Customer Service. DeerValley will determine whether to repair or replace your product, issue a refund, or issue a credit.