Scan me to watch the installation video

Swivel Rocker

ASSEMBLY INSTRUCTIONS

OE-H-571

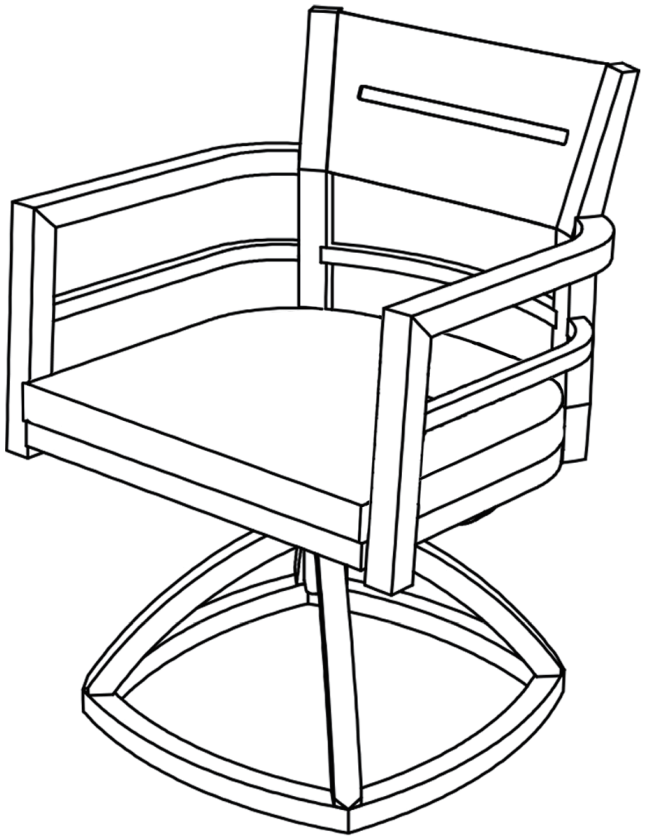

BEFORE ASSEMBLY:

· Please read these instructions carefully before starting assembly. We suggest you carry out the assembly on a soft surface like a carpet, so as to avoid scratching the paint. Keep children away during assembly. This item contains small parts which can be swallowed by children.
· This product was made for the explicit purpose of providing outdoor function and is not to be used as a toy. This product is for residential use only. This product is NOT intended for commercial use; unintended use will void the warranty.
· This product is not intended for use during inclement or severe weather, that includes but is not limited to rain, hail, sleet, snow, wind, freezing conditions and extreme heat.
· Please note because of the nature of cast metal, you may find roughness on the surface which enhances the beauty of the product and is not a defect.
· Aluminum is soft metal, please do not use power tools, and over tighten may strip threads or break the parts.
· When not in use, store and/or cover the product in a cool dry location. Do not locate the product near any sort of high heat. Do not use the product as a support.
· Children under the age of 10, who are near the product, should be supervised by a competent adult at all times.
· Do not discard any of packaging until you finish the assembly. Keep the assembly instructions for future reference or warranty.
· **Minor product improvements may be made without prior notice.**

PARTS LIST:
Place all the parts on a clean and soft surface, identify all the parts and hardware kits against parts list.
*** : A portion of the quantity for the parts marked with an asterisk is located on part B.**

A×2 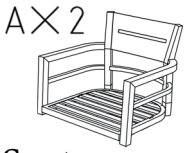 Seat	B×2 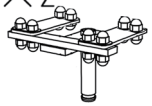 Connector	C×2 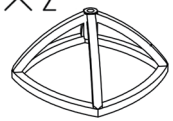 Base	D×8 * Double-hole washer
E×16 * Bolt (M8×35)	F×16 * Nut	G×32 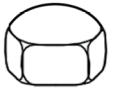 Nut Cap	H×16 * Lock Washer
I×16 * Washer	M×2 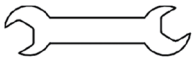 Wrench	N×2 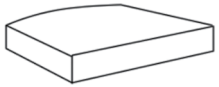 Cushion	

Step 1: Place all the parts on a clean and soft surface, identify all the parts and hardware kits against parts list. Assemble Seat(A) and Connector(B) first, and make sure the direction of connector(B) is correct as Fig(1). This is very important for safe.

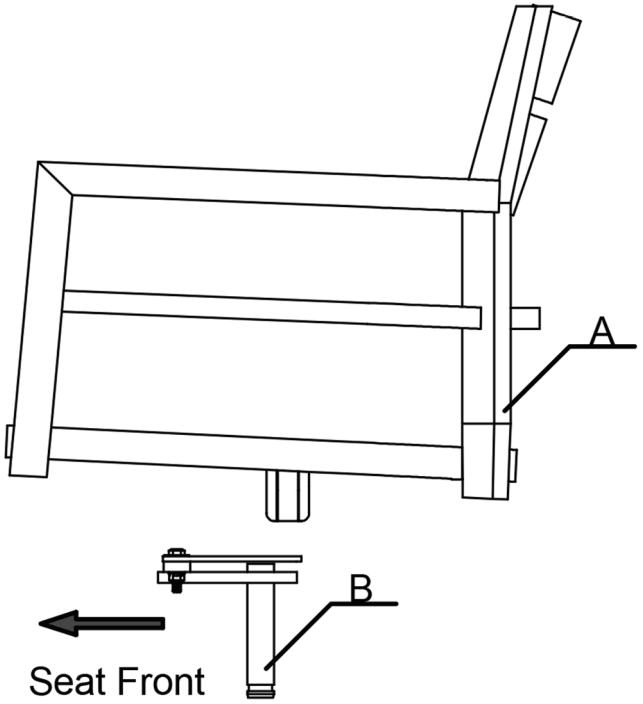

(1)

Step 2: Install hardware parts(D,E)and (I,H,F) in the order displayed in Fig(2). Assembling them until an initial connection is established. Then tighten all the bolts and nuts with Wrench(M). Do not over tighten bolts and nuts, it will cause the damage of U-bar of Seat(A) without warranty.

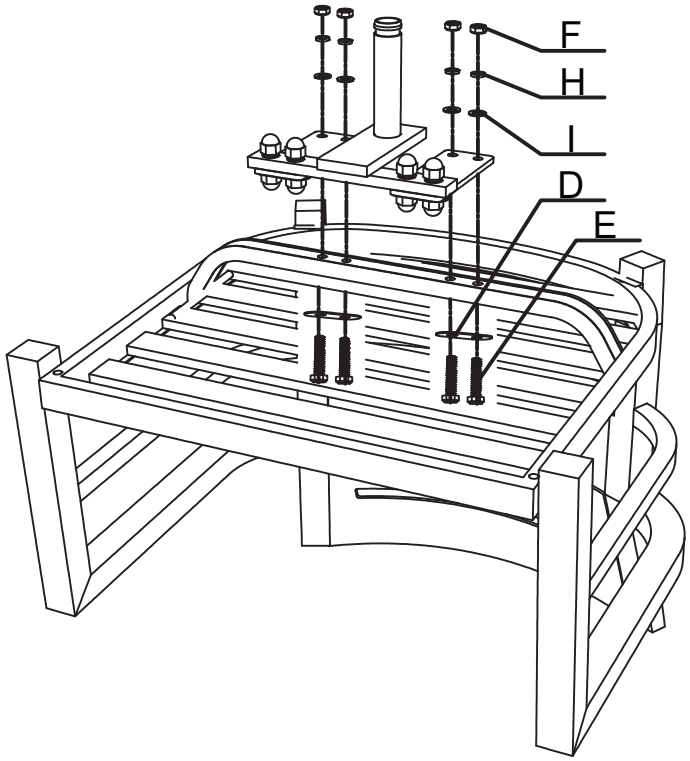

(2)

Step 3: Put all the Bolt Caps(G) on the Bolts in the order displayed in Fig(3) .

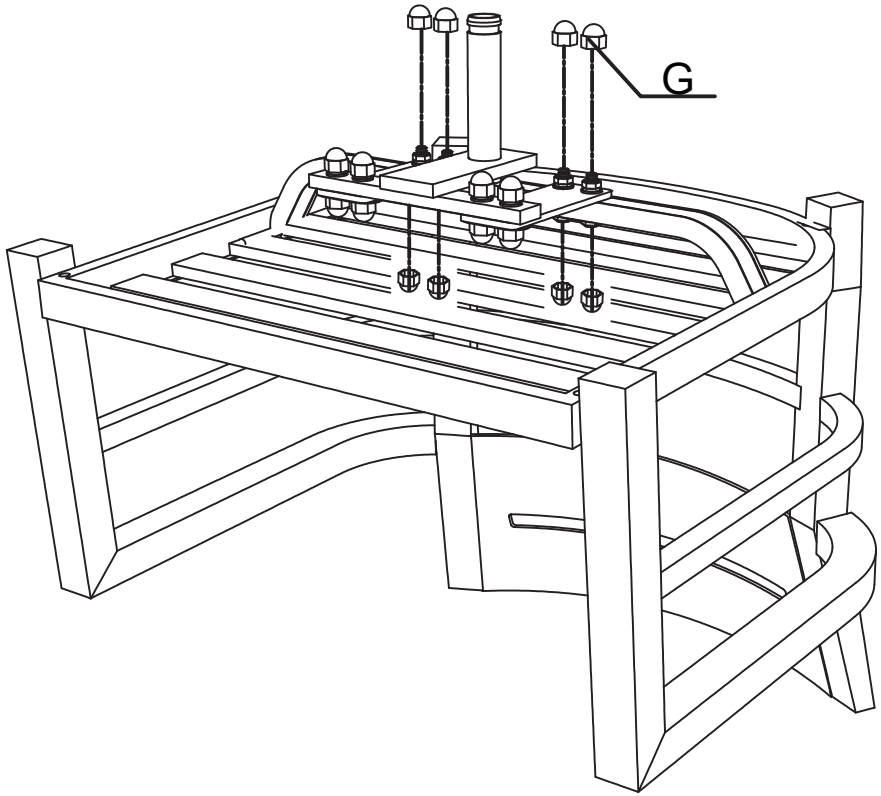

(3)

Step 4: Insert the installed rotating shaft into the Base(C) as Fig(4).

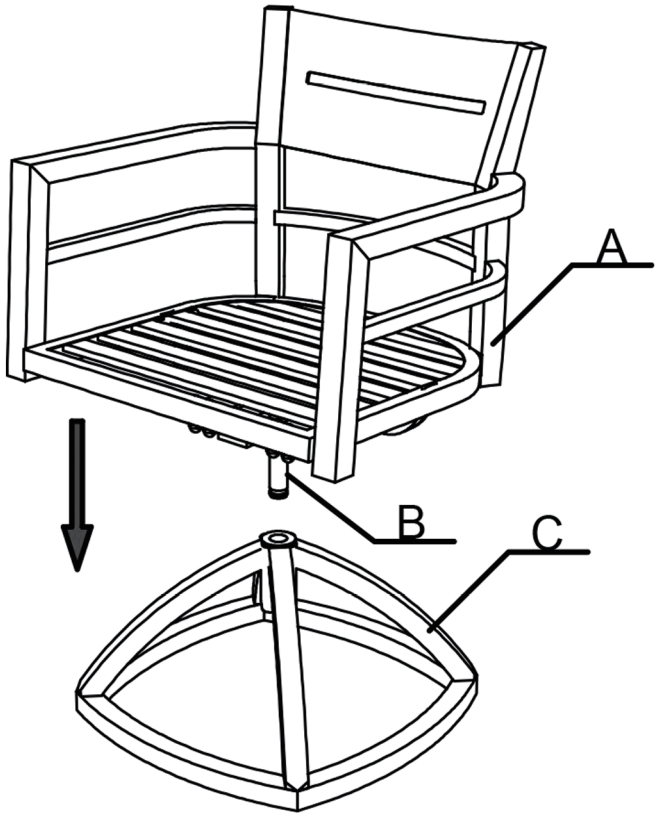

(4)

Step 5: Then tie the Cushion(N) to the chair. Check and ensure that your swivel Rocker is in a stable condition. Your chair should be ready for use.

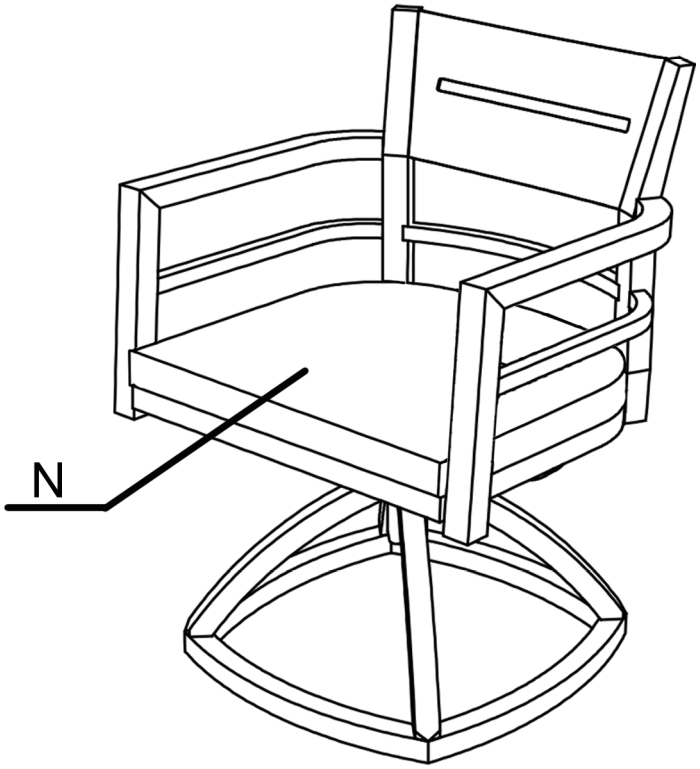

(5)