JOFRAN INC. furnishing better lives together ®

WWW.JOFRAN.COM

ASSEMBLY INSTRUCTIONS & PARTS IDENTIFICATION
MODEL # 2601-72
SLATER WORKS ROUND TO OVAL DINING TABLE

Thank you for purchasing this quality product. Be sure to check all packing material carefully for small parts that may have come loose inside the carton during shipment.

KEY COMPONENTS			
No.	Code	Q'ty	Description
1	NOT AVAILABLE AS A PART	4 Pcs	Table leg
2	NOT AVAILABLE AS A PART	1 Pc	Table top
3	NOT AVAILABLE AS A PART	2 Pcs	Extension Mechanism
4	2601P13L	4 Pcs	Extension lock
5	2601-72P01A	4 Pcs	Apron Spacer
6	2601-72P11L	1 Pc	Lower Stretcher-Dining
7	2601-72P11U	1 Pc	Upper Stretcher-Dining
8	2601-72P29	1 Pc	Mounting board
9	2601P01F	4 Pcs	Floor glide

HARDWARE KIT 2601-72P01				
No.	Description			Q'ty
A		Long bolt	Ø8x60	4 Pcs
B		Short bolt	Ø8x35	10 Pcs
C		Short bolt	Ø6x40	1 Pc
D		Hex nut	Ø8	8 Pcs
E		Lock washer	M8	23 Pcs
F		Flat washer	M8x18	23 Pcs
G		Allen key	K4	1 Pc
H		Key wrench	12	1 Pc
I		Wood dowel	Ø10x30	4 Pcs

SETUP REQUIRES TWO PERSONS - DO NOT USE POWER TOOLS TO ASSEMBLE

STEP 1:

-Insert the wood dowel into Lower and Upper stretcher
-Put the Lower and Upper stretcher together. Secure with Short Bolt (C) and Washers.

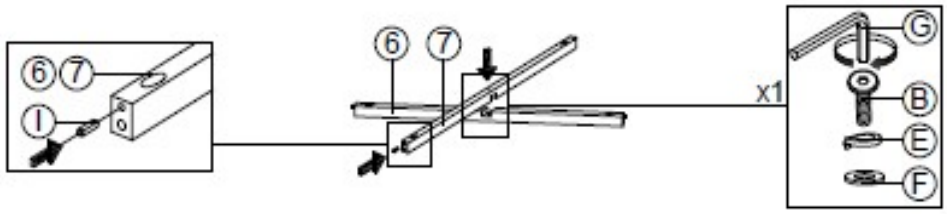

STEP 2:

-Attach the four legs to the mounting plate keeping the nuts loose at this time.
-Fit the stretchers into the legs and attach using the Long Bolt (A), Lock Washer and Flat Washer. Fully hand tighten with the Allen key.
-Fully tighten the four leg bolts.

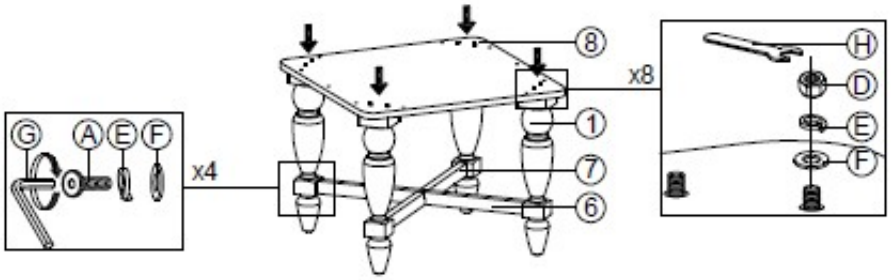

STEP 3:

-Attach the leg assembly to the tabletop using the Short Bolts (B),Lock Washers and Flat Washers.
- Fully tighten all bolts.

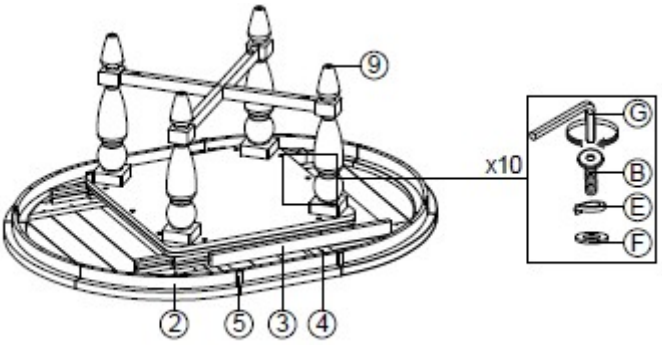

STEP 4:

Release the Extension Locks to remove or add the table leaf

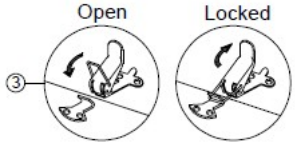



MADE IN VIETNAM

JOFRAN INC. furnishing better lives together ®

WWW.JOFRAN.COM

ASSEMBLY INSTRUCTIONS & PARTS IDENTIFICATION
MODEL # 2601-400KD
SLATER WORKS LADDER BACK CHAIR

Thank you for purchasing this quality product. Be sure to check all packing material carefully for small parts that may have come loose inside the carton during shipment.

KEY COMPONENTS			
No.	Code	Q'ty	Description
1	NOT AVAILABLE AS A PART	1 Pc	Chair back
2	2601-400KDP41	1 Pc	Complete seat
3	2601-400KDP42	1 Pc	Right facing front leg
4	2601-400KDP43	1 Pc	Left facing front leg
5	2601-400KDP44	1 Pc	Right facing side stretcher
6	2601-400KDP45	1 Pc	Left facing side stretcher
7	2601P01F	4 Pcs	Floor glide

HARDWARE KIT 2601-400KDP01				
No.	Description			Q'ty
A		Long bolt	Ø6x80	4 Pcs
B		Short bolt	Ø6x35	3 Pcs
C		Hex nut	Ø8	4 Pcs
D		Lock washer	M8	11 Pcs
E		Flat washer	M8x18	11 Pcs
F		Allen key	K4	1 Pc
G		Key wrench	12	1 Pc
H		Screw	M4x40	4 Pcs

DO NOT use power tools to assembly.

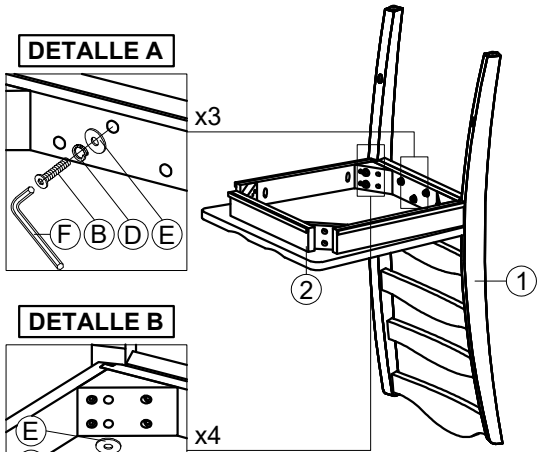

STEP 1:

- Carefully lay Chair Back flat on a smooth flat surface to prevent scratches.
- Attach Complete Seat to Chair Back by inserting a Flat Washer, Lock Washer and Short bolt into each of the hole on the back of the seat. Tighten screws with provided Allen Key by turning clockwise until secure. (See Detail A).
- Insert a Flat Washer, Lock Washer an Long bolt into each of 2 holes in the Complete Seat corners. Tighten screws with provided Key Wrench. (See Detail B).

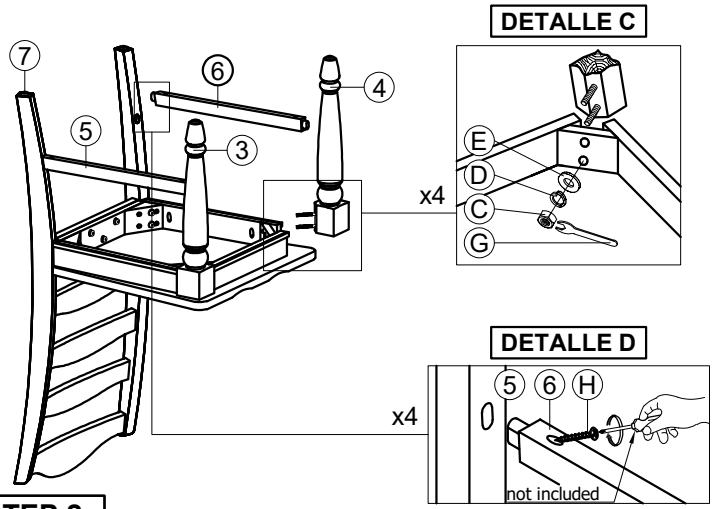

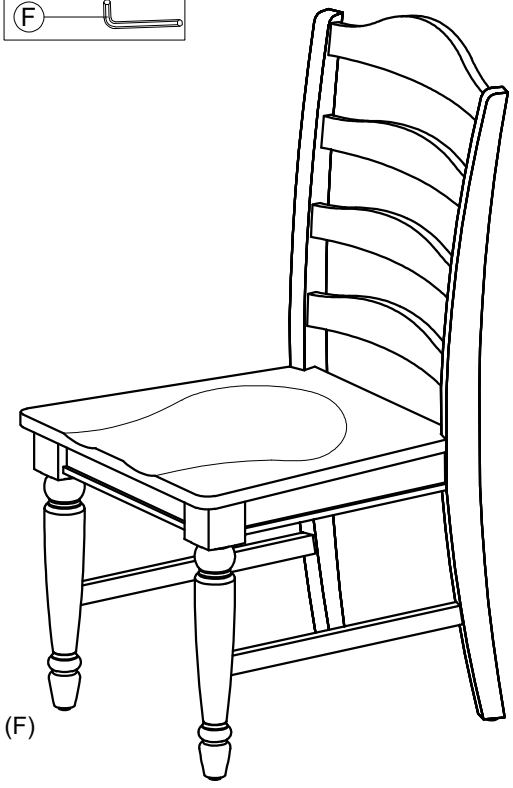

STEP 2:

- Carefully turn chair upside down and attach each Leg to the front corners of the Complete Seat. Place Flat Washer, Lock Washer and Nut on each leg bolt, tightening the Nut on each Leg using provided Key Wrech. (See Detail C).
- Be sure to level the chair prior to tightening all the nuts/screws.
- Insert 2 Side Stretchers between the Front Legs, fasten by hand with Wood Screw (F) using a phillíp-head screwdriver. (not provided). (See Detail D). Once in place, tighten all the leg bolts.

MADE IN VIETNAM