ASSEMBLY INSTRUCTIONS



Sleeper Sofa Bed

ASSEMBLY INSTRUCTIONS

ASSEMBLY TIPS:

1. Remove hardware from box and sort by size.
2. Please check to see that all hardware and parts are present prior to start of assembly.
3. Please follow attached instructions in the same sequence as numbered to assure fast & easy assembly.

WARNING!

1. Don't attempt to repair or modify parts that are broken or defective. Please contact the store immediately.
2. This product is for home use only and not intended for commercial establishments.

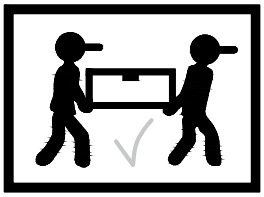

ASSEMBLY TIME	10 MINUTES

PARTS IDENTIFICATION

A	SOFA FRAME	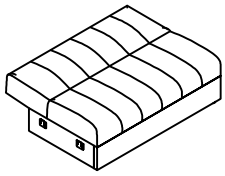	1PC
B	LEFT ARM	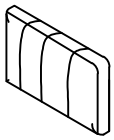	1PC
C	RIGHT ARM	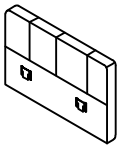	1PC
D	PILLOW	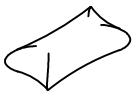	2PCS
E	LONG LEG		2PCS
F	SHORT LEG		2PCS
G	TRESTLE BAR		1PC

HARDWARE IDENTIFICATION

1	FLAT HEAD SCREW (M5 x 50mm - BLK)		6PCS
2	FLAT WASHER (1/4 x 19mm - BLK)		2PCS

NOTE:

Phillips head screw driver is required in the assembly process; however, manufacturer does not provide this item.

ASSEMBLY INSTRUCTIONS

STEP 1

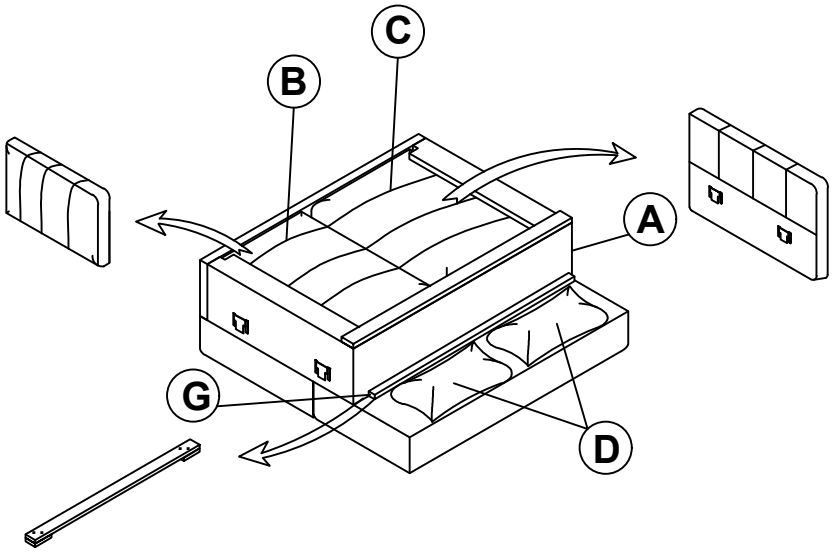

STEP 2

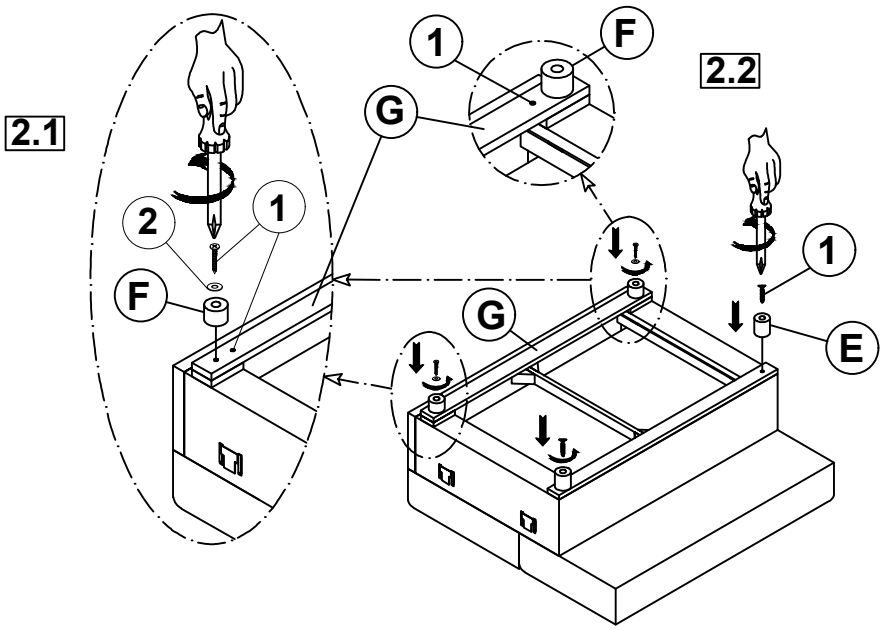

STEP 2

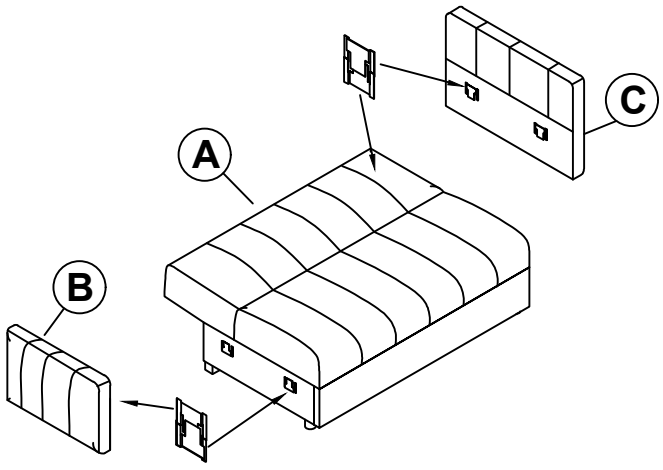

ASSEMBLY INSTRUCTIONS

STEP 4

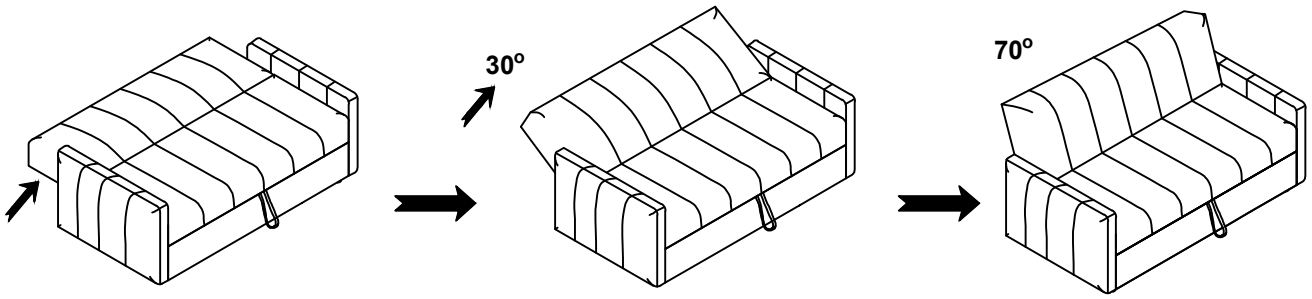

STEP 5

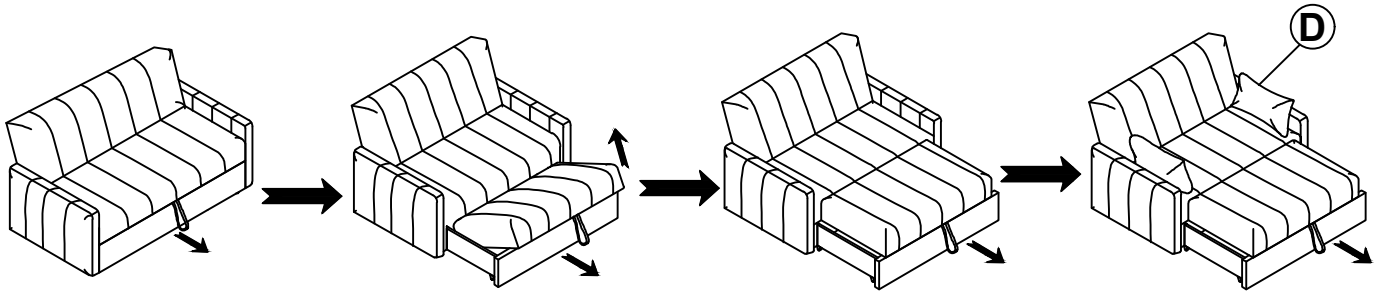

STEP 6
COMPLETE

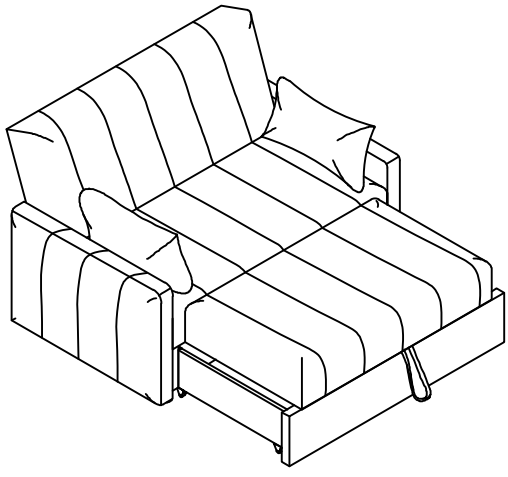

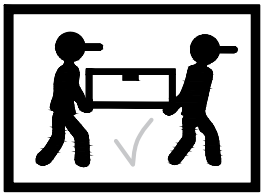

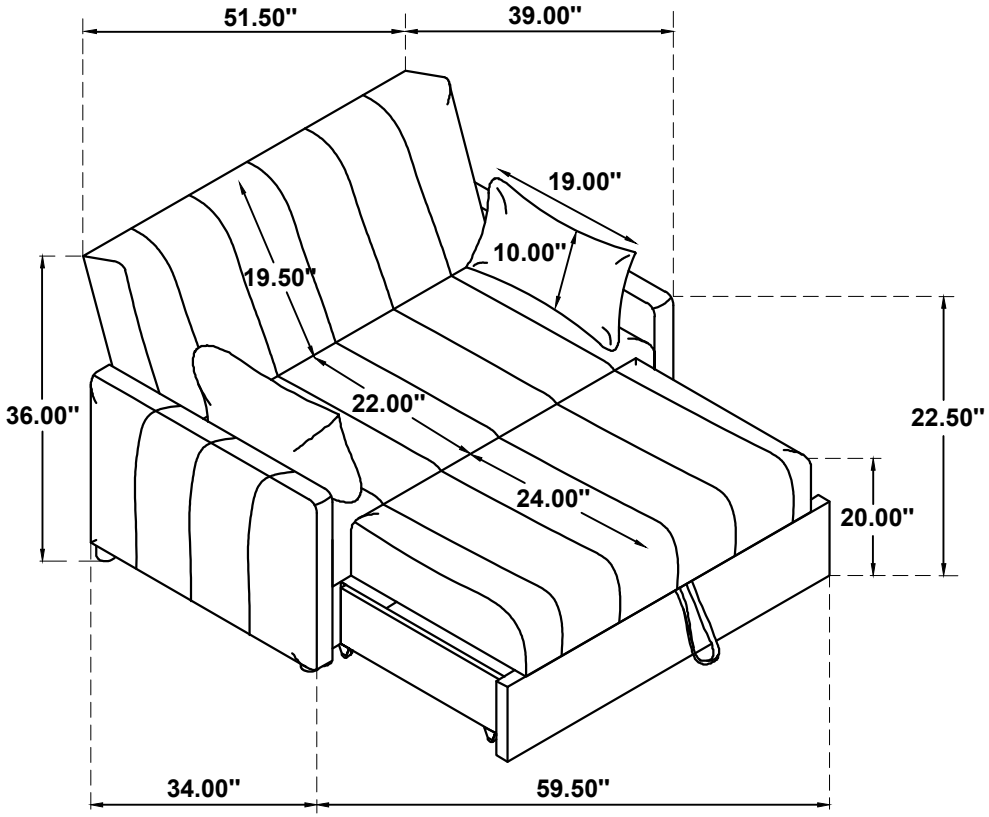

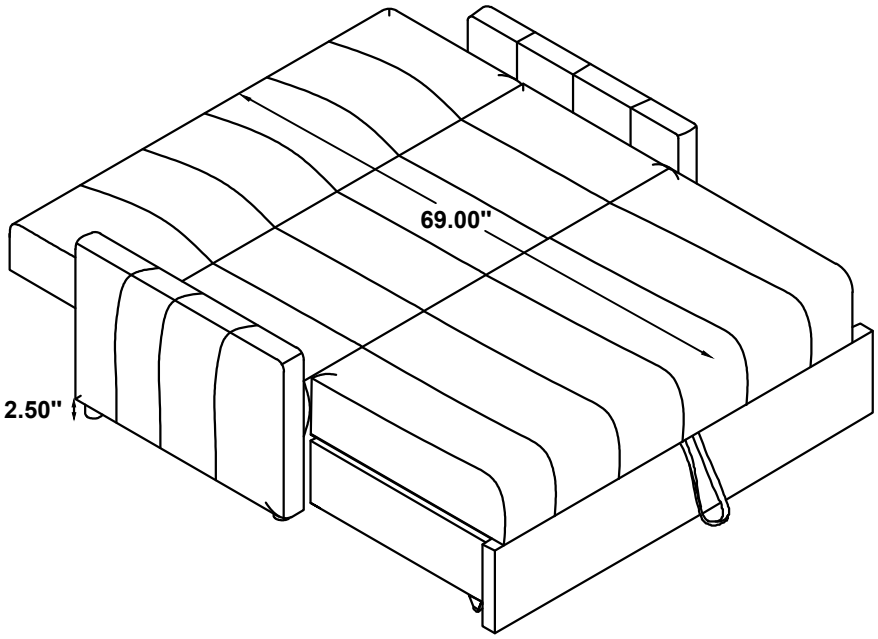

Note: Dimension tolerance ±5%