KIDS SLIDE

Instruction manual

LJW-1

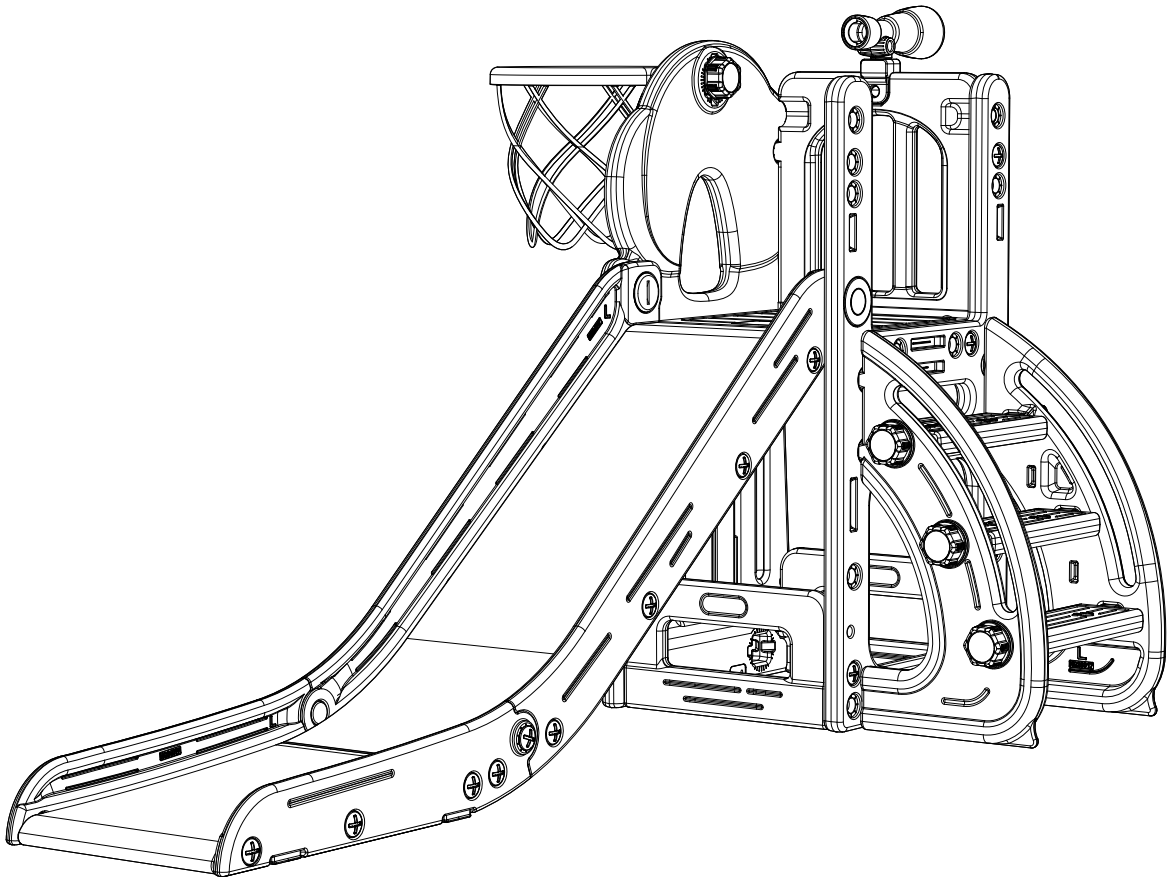

E-mail Service : toddlerslide@gmail.com

Please read and keep the manual properly, it contains important information.

INFORMATION BEFORE ASSEMBLING

Check if following spare parts are in the box:

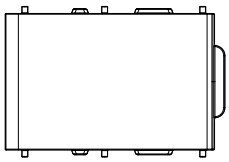

① x1

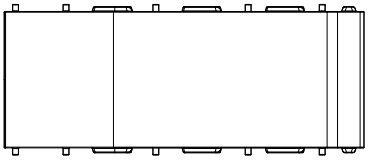

② x1

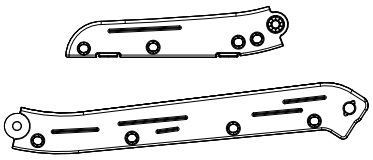

③ x2 pair

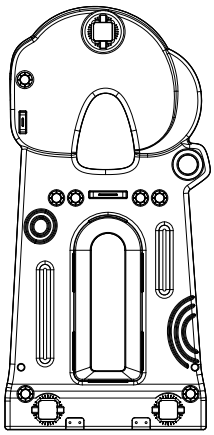

④ x1

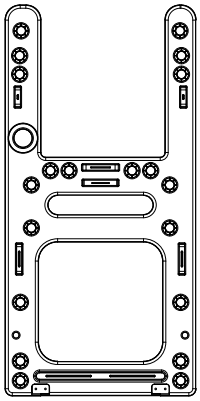

⑤ x1

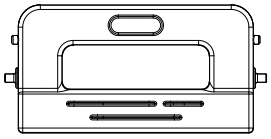

⑥ x2

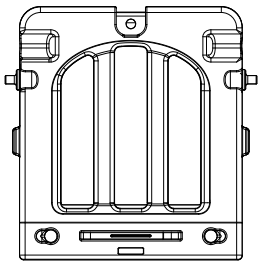

⑦ x1

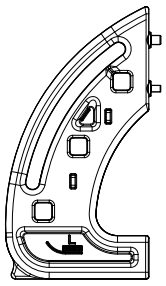

⑧ x1

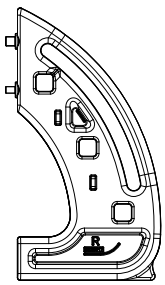

⑨ x1

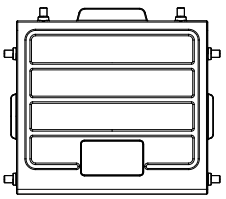

⑩ x1

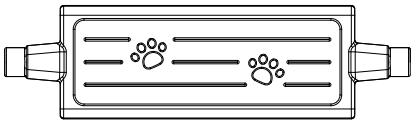

⑪ x3

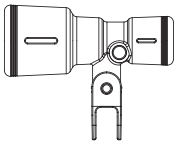

⑫ x1

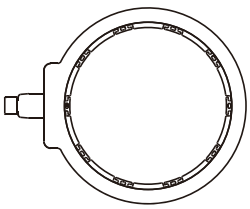

⑬ x1



⑭ x1

INFORMATION BEFORE ASSEMBLING

Check if following spare parts are in the box:

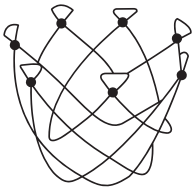

15 x1

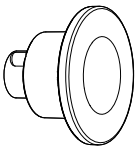

16 x2

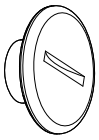

17 x2

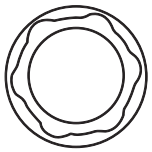

18 x7

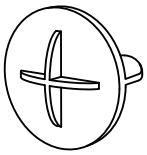

19 x1

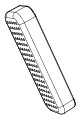

20 x4

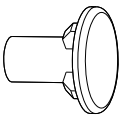

21 x2



22 x32(Small)

⚠ HOW TO ASSEMBLE SCREWS

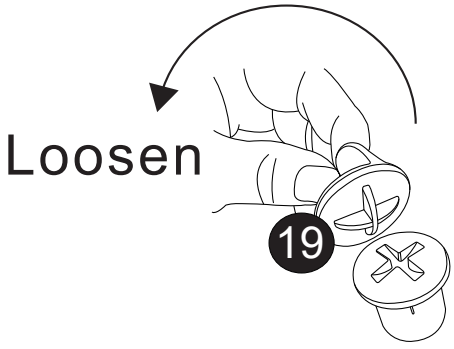

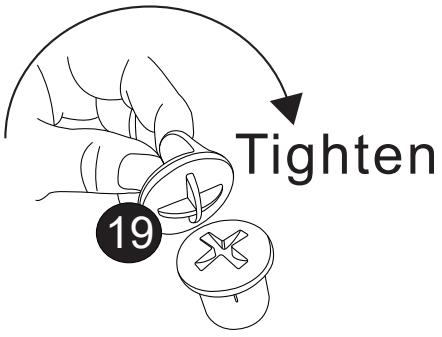

ASSEMBLING

STEP 1

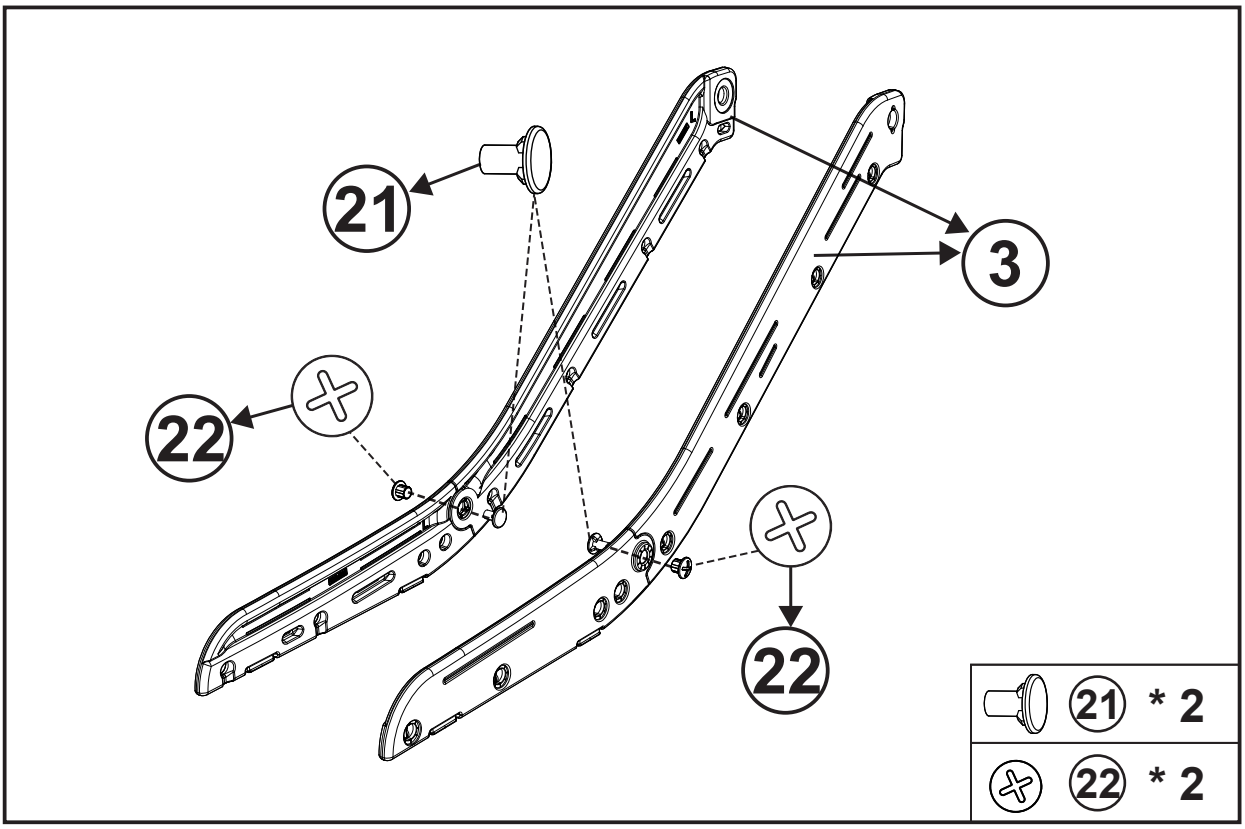

STEP 2

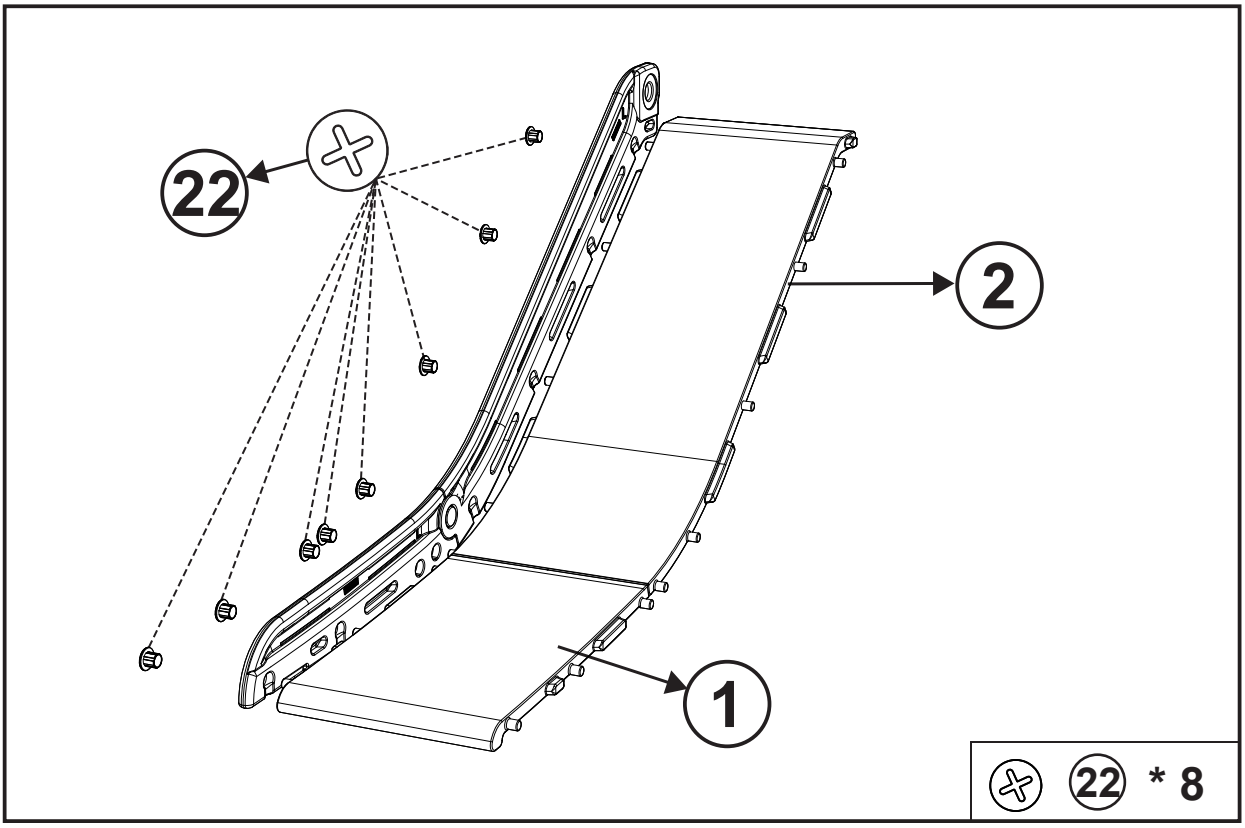

ASSEMBLING

STEP 3

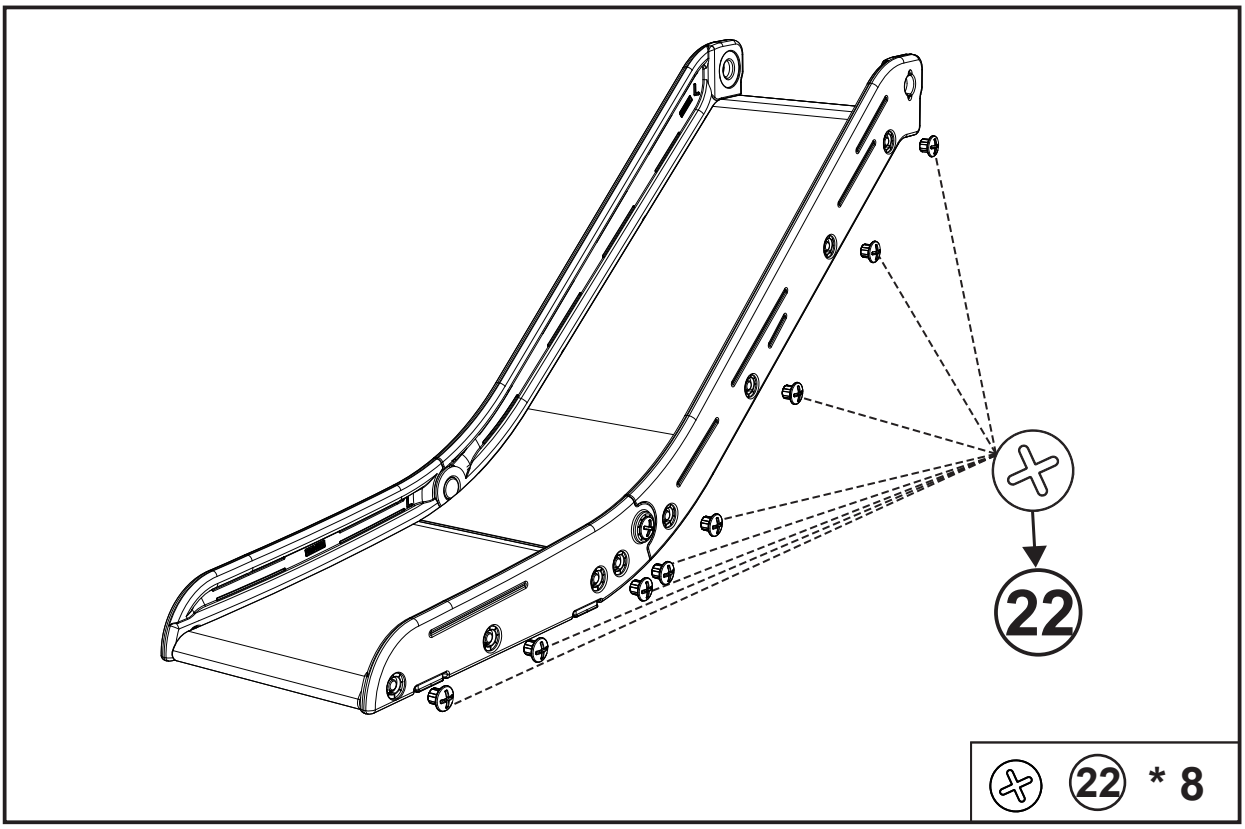

STEP 4

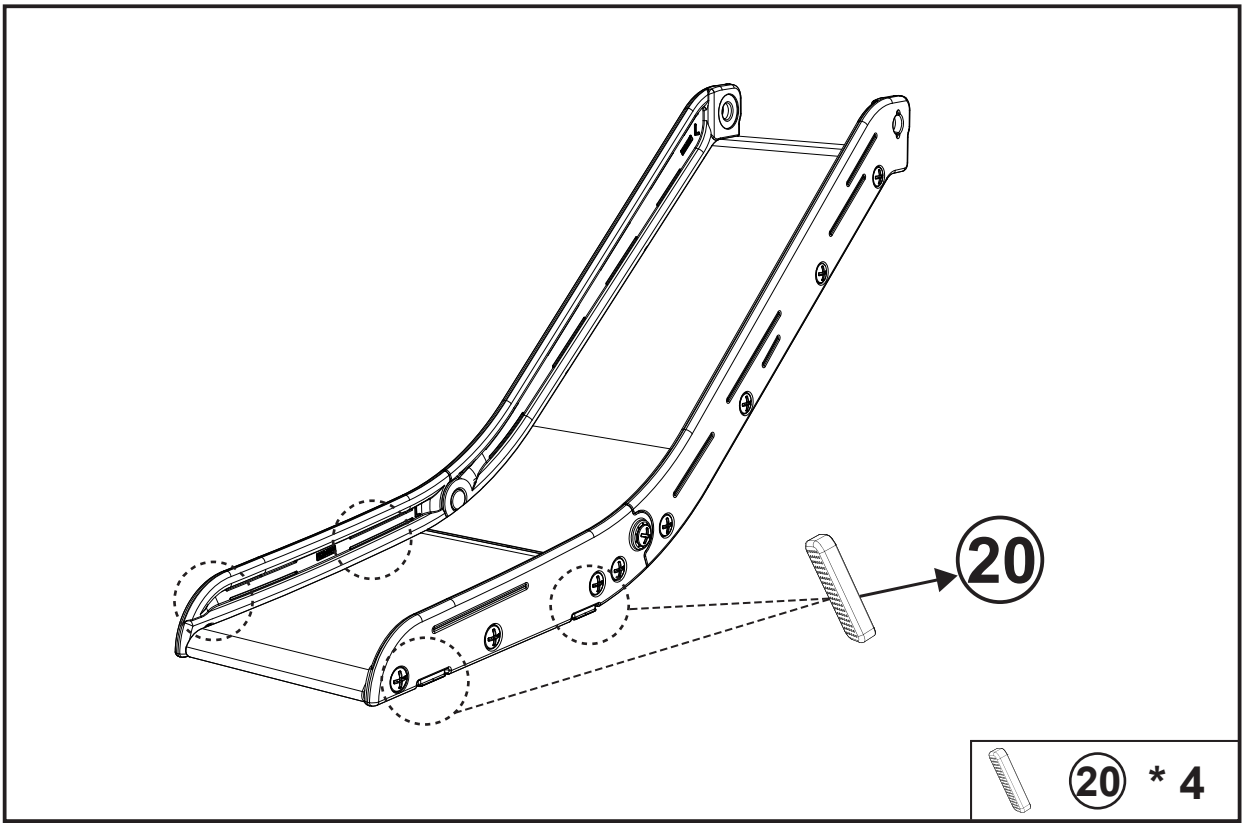

ASSEMBLING

STEP 5

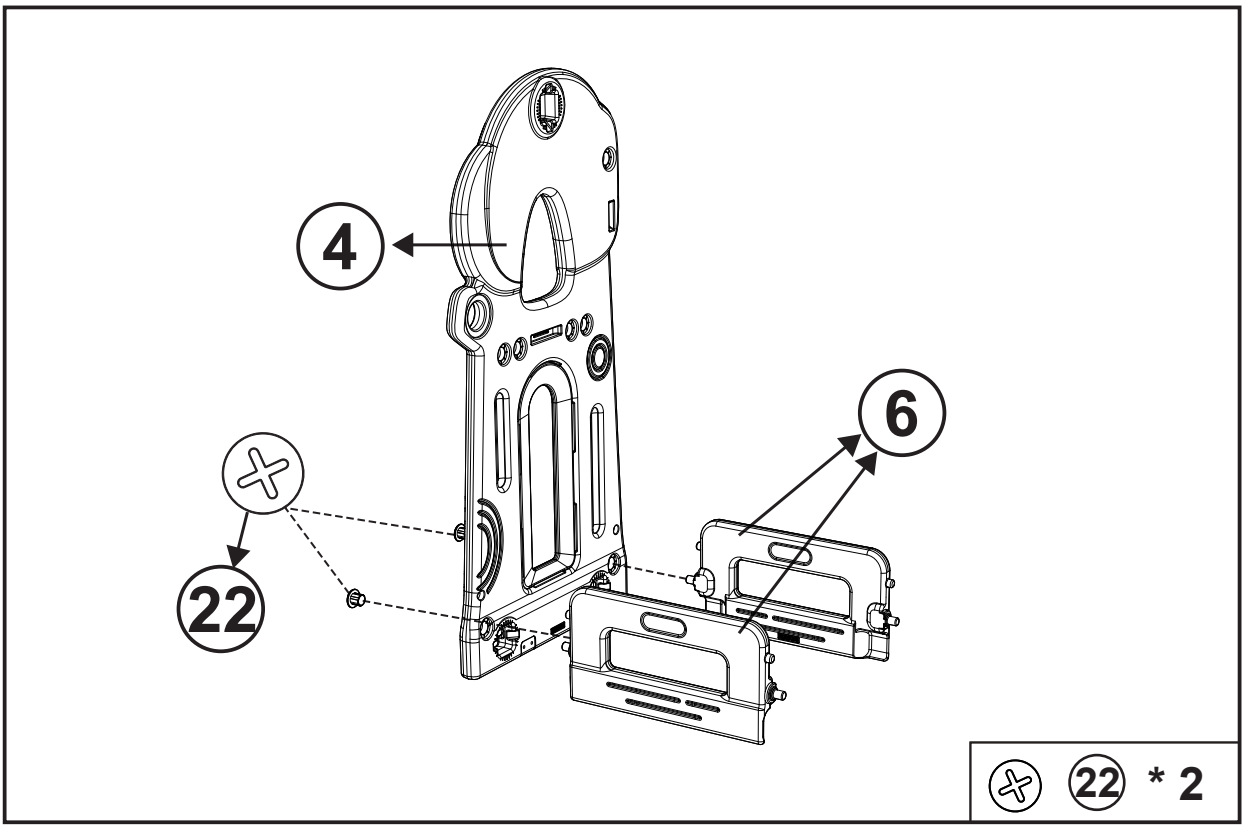

STEP 6

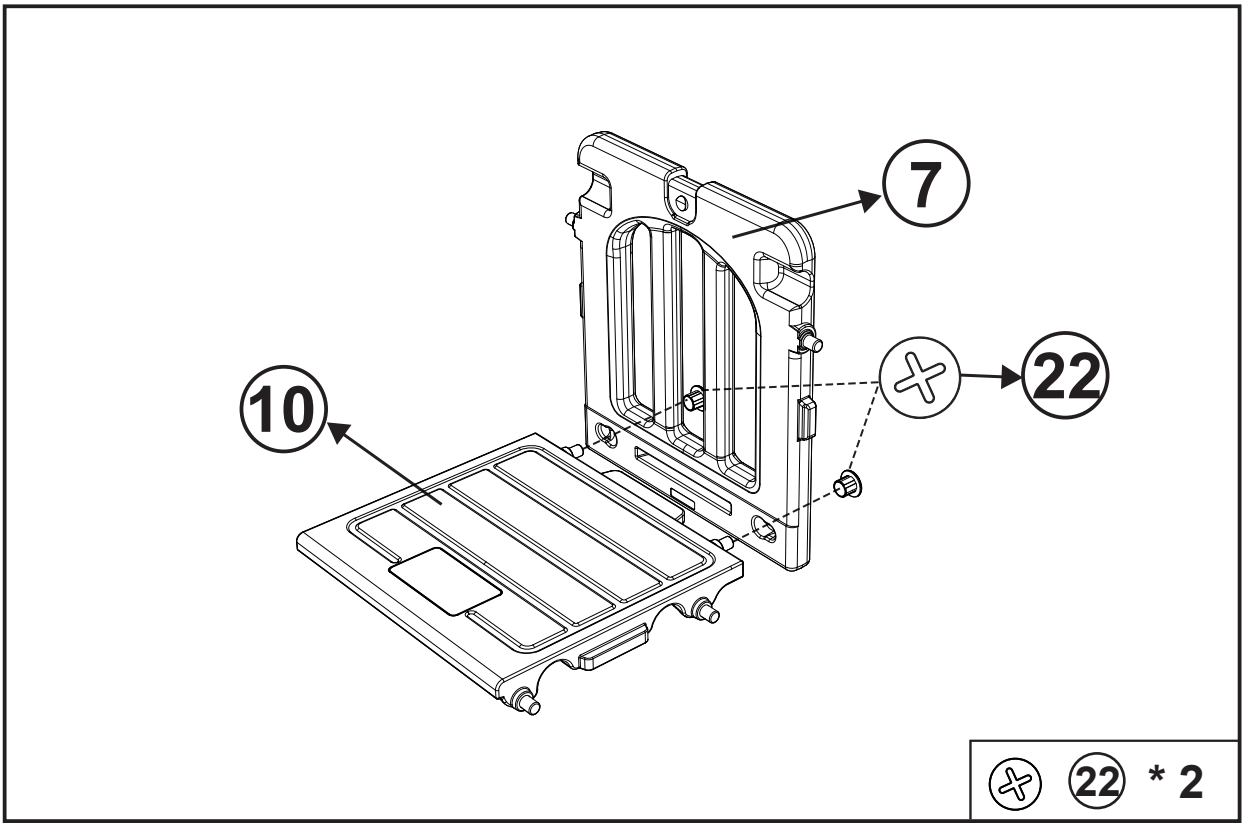

ASSEMBLING

STEP 7

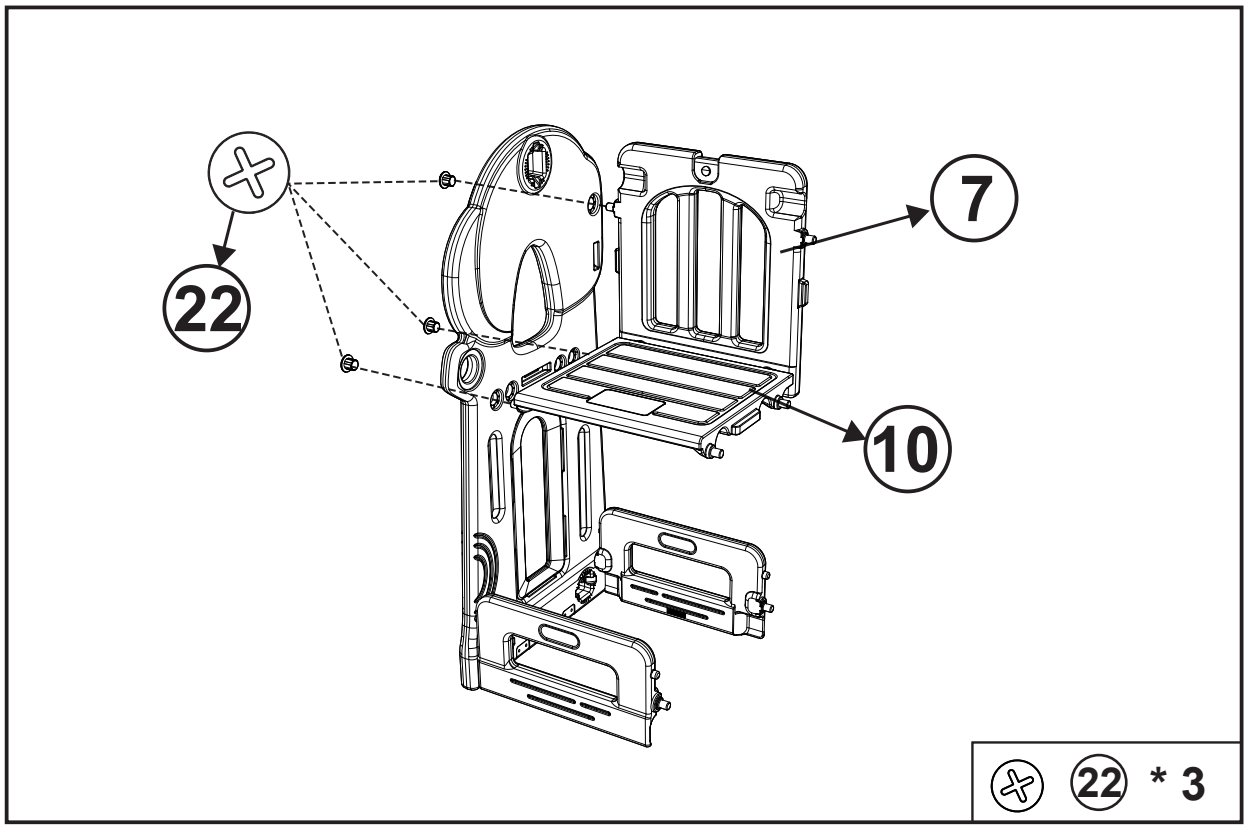

STEP 8

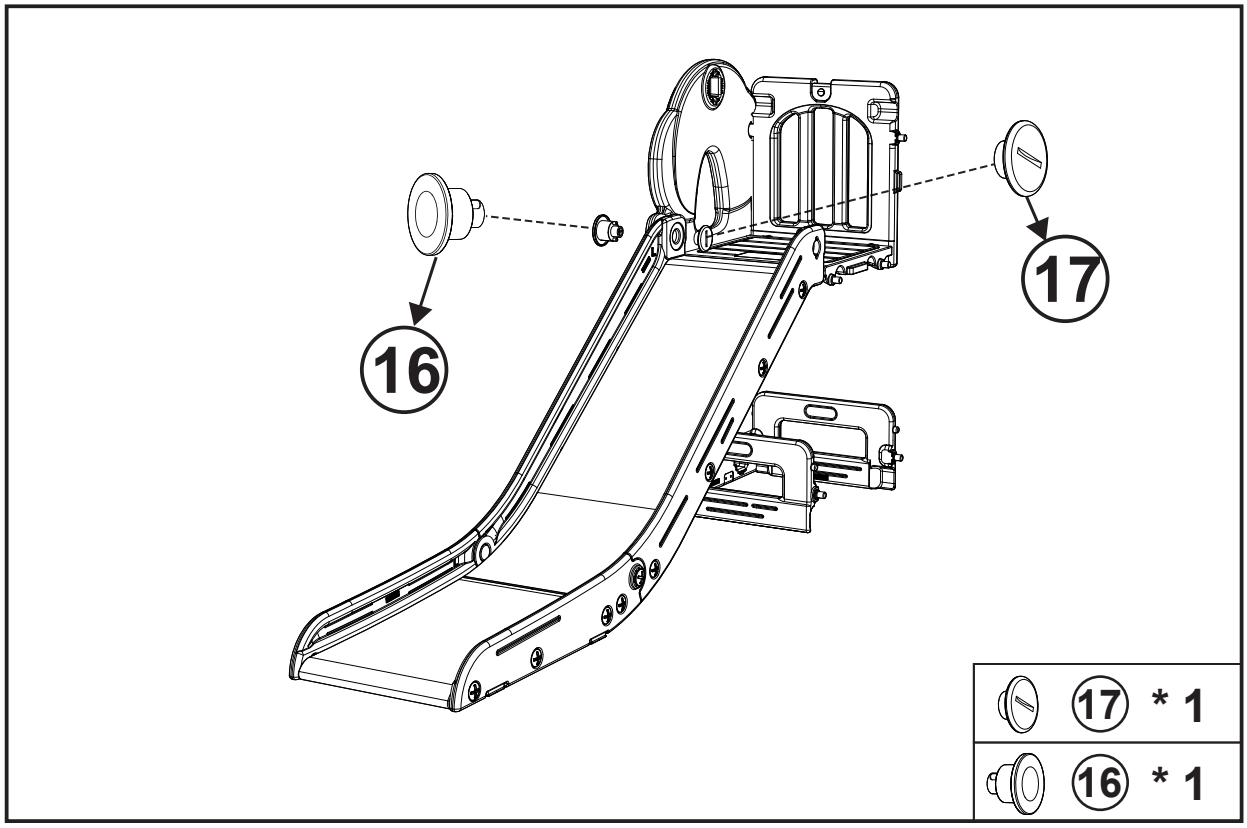

ASSEMBLING

STEP 9

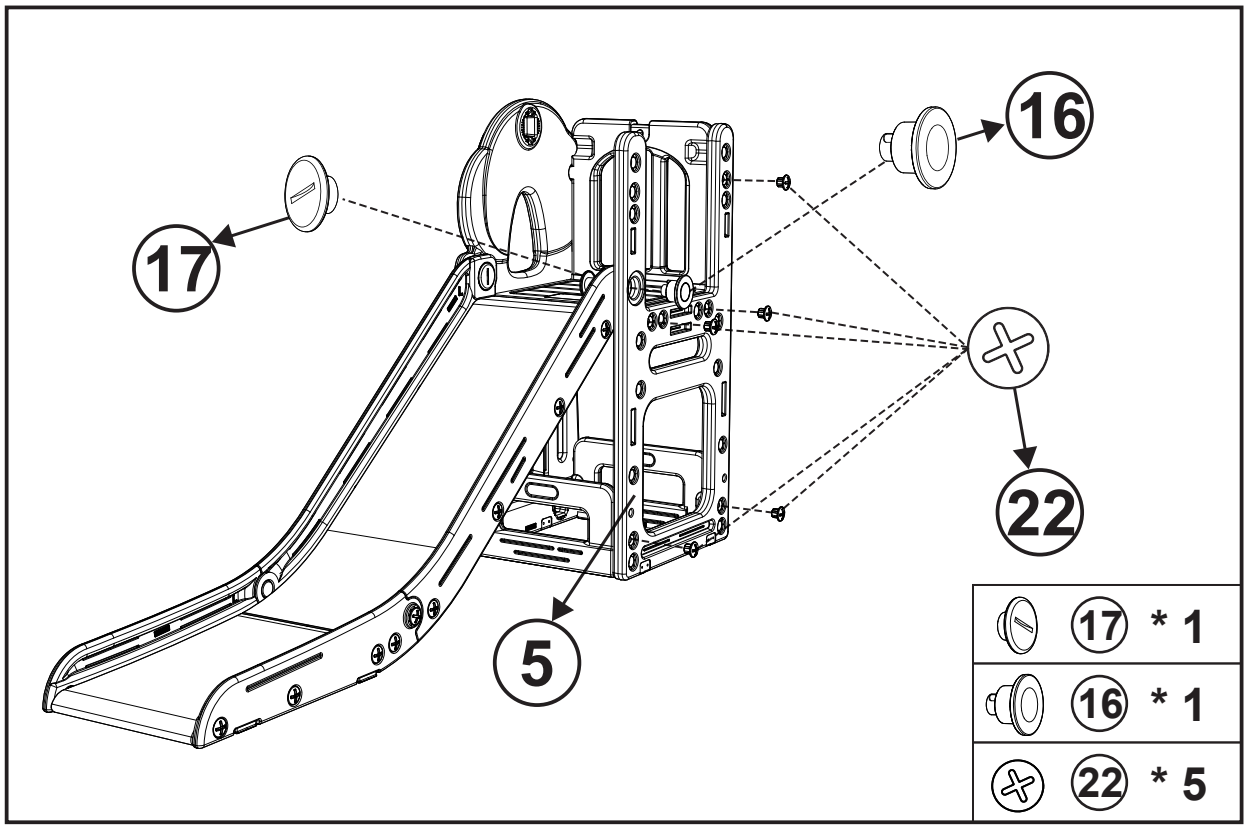

STEP 10

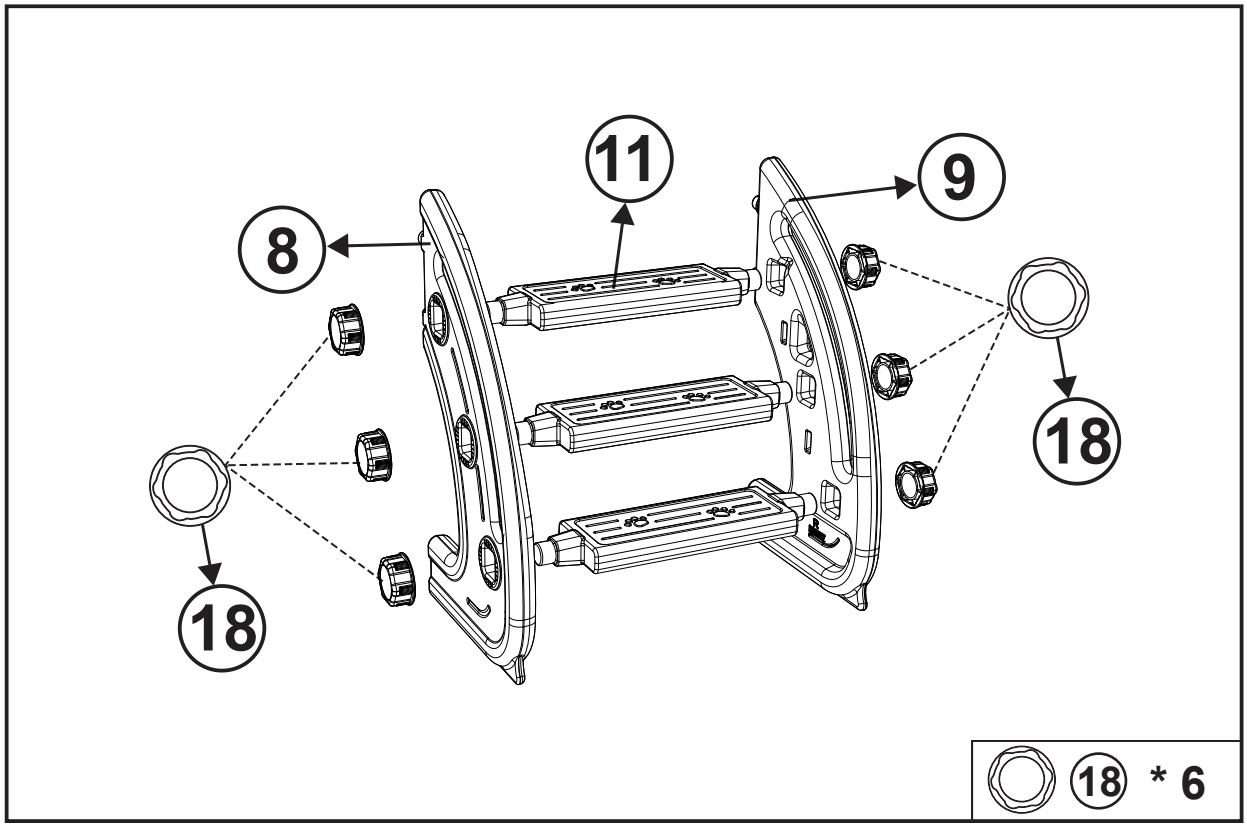

ASSEMBLING

STEP 11

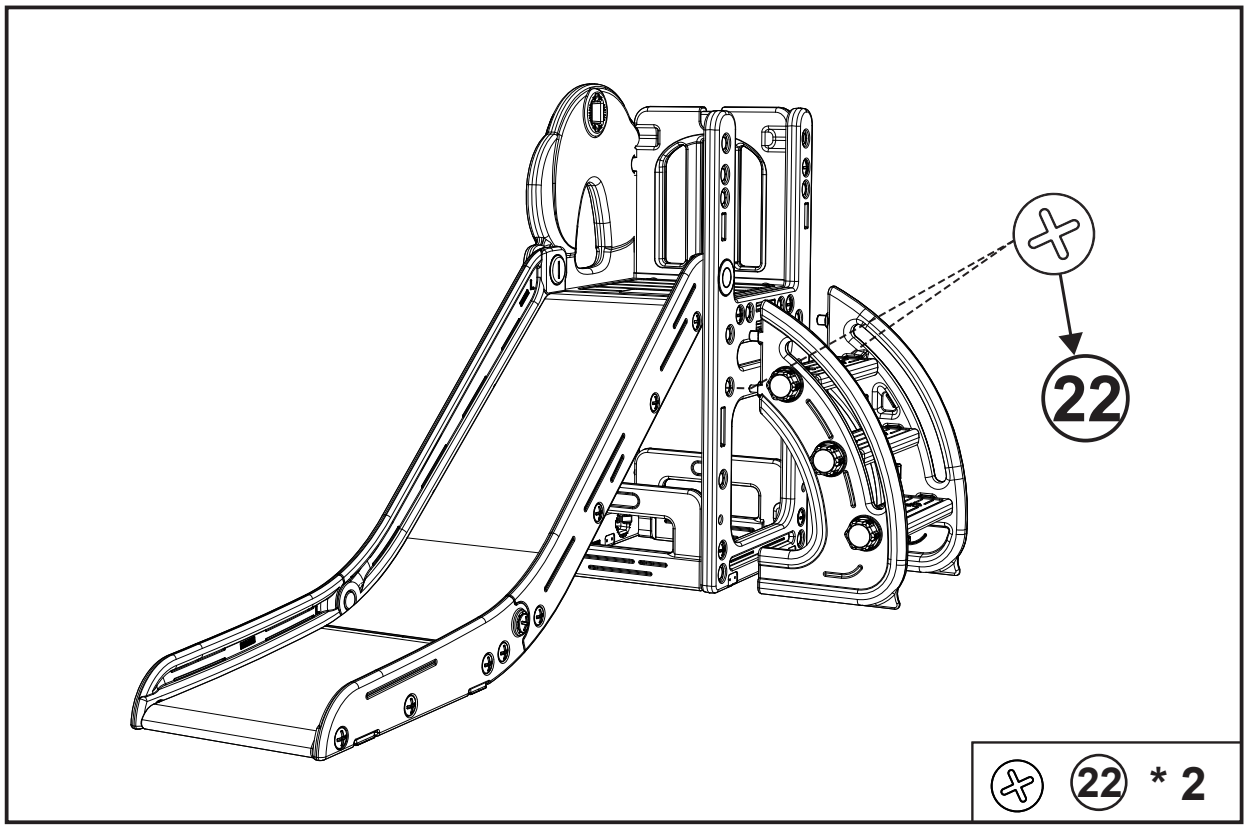

STEP 12

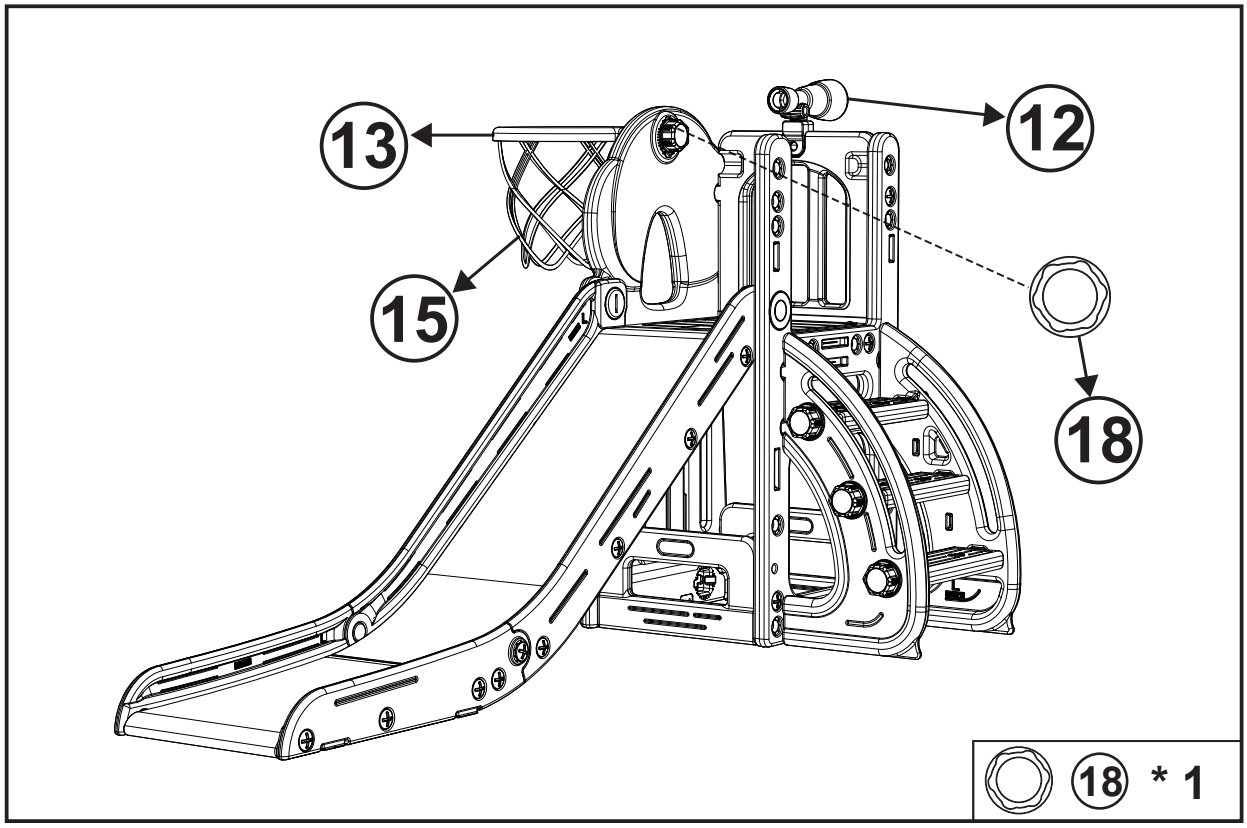

BASKETBALL NET INSTALLATION STEPS

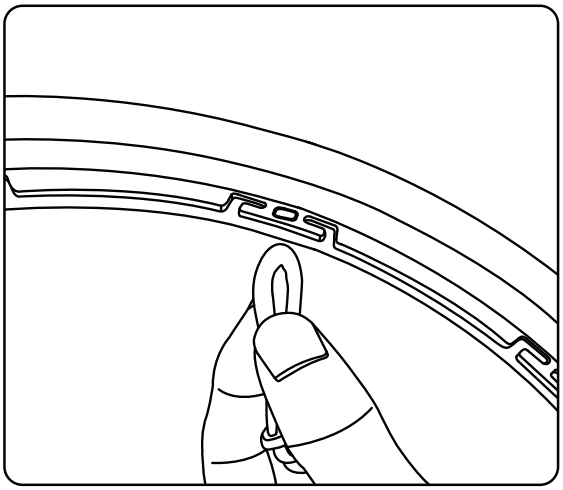

❶ Pick up one end of thebasketball net.

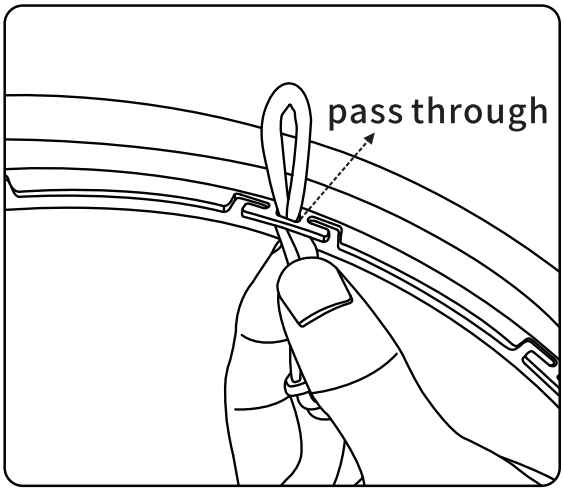

❷ Pass the basketball net through the middle of the basketball hoop hanging hole.

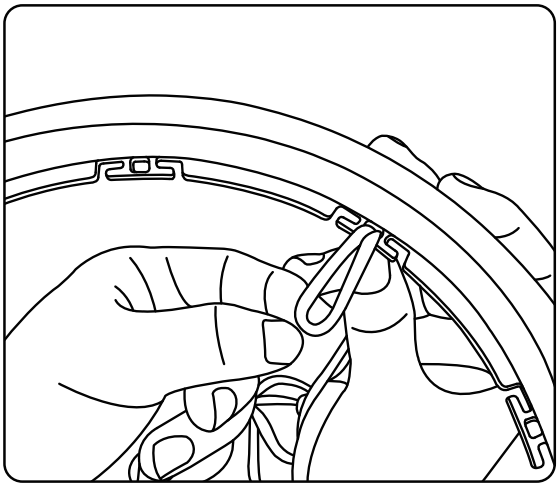

❸ Reserve enough passed parts to facilitate subsequent operations.

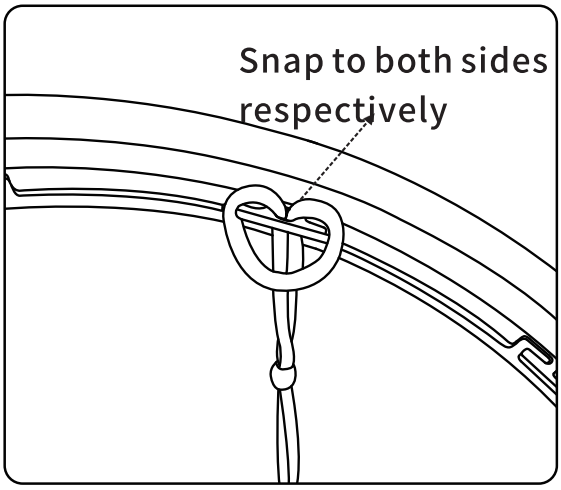

❹ Snap the basketball net into the grooves on both sides of the hanging hole.

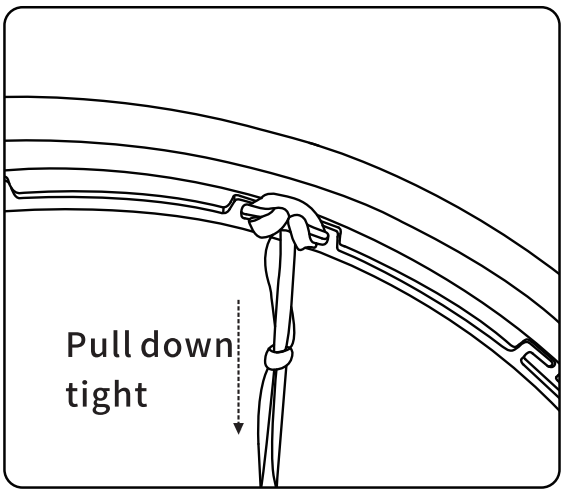

❺ Tighten the basketball net downwards so that the ropes passing through the hanging holes form a double knot.

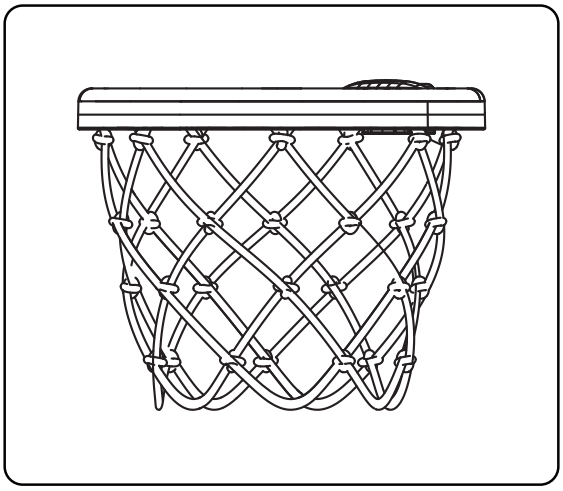

❻ Use the same method to hang basketball nets in other directions to the corresponding holes.

THANK YOU

Thank you for purchasing the kid slide from our store. If you experience any problem while using it, please feel free to contact us. We will solve the problem for you quickly and provide the best customer service!

E-mail Service : toddlerslide@gmail.com