01 ACCESSORIES DISPLAY

A x 1 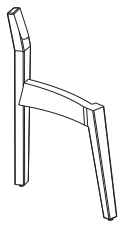	B x 1 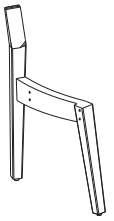	C x 1 
D x 1 	E x 1 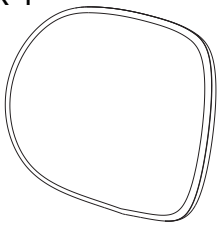	F x 1 

1 x 4 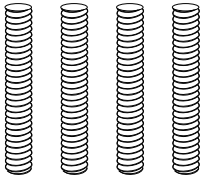	2 x 4 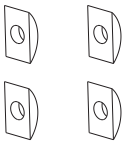	3 x 4 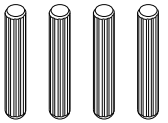	
4 x 4 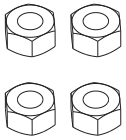	5 x 8 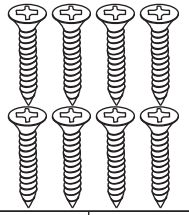	6 x 4 	
7 x 4 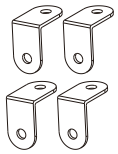	8 x 4 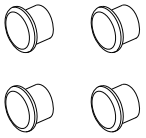	9 x 4 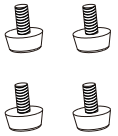	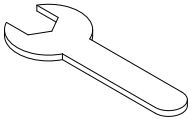

DINING CHAIR ASSEMBLY INSTRUCTIONS

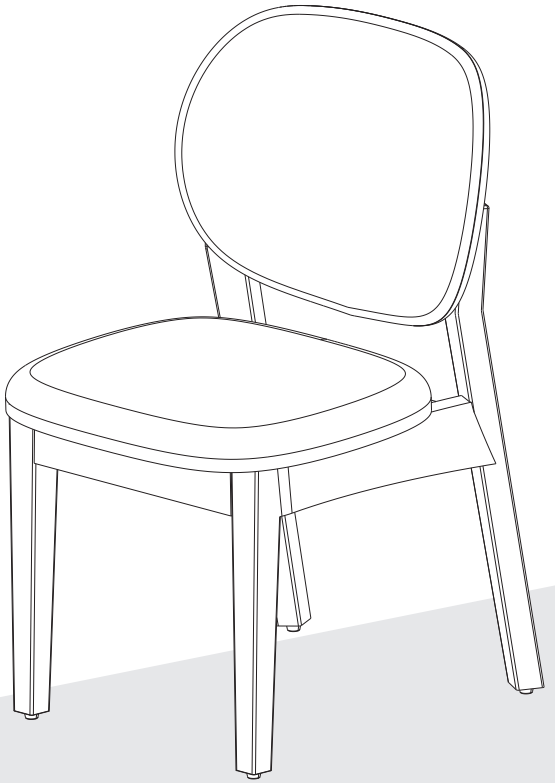

Thank you for purchasing our product. Please read this manual carefully before use.

STEP 1

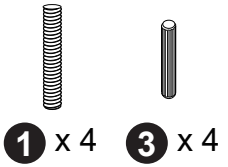

1 x 4

3 x 4

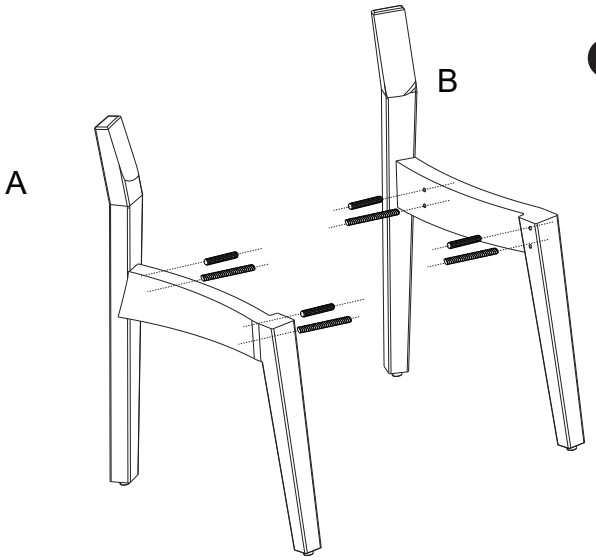

STEP 2

2 x 4



4 x 4

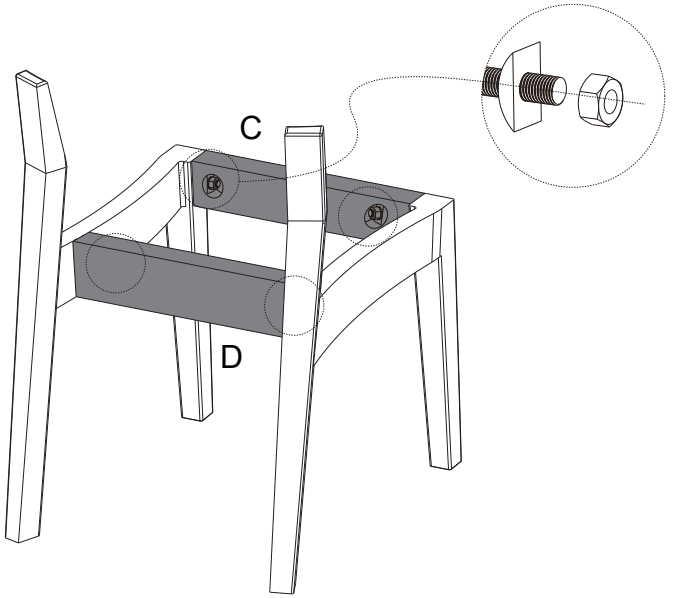

STEP 3



7 x 4



5 x 8

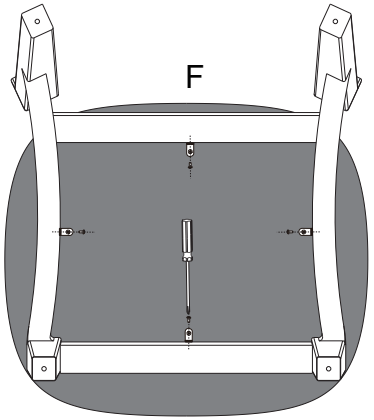

STEP 4



6 x 4

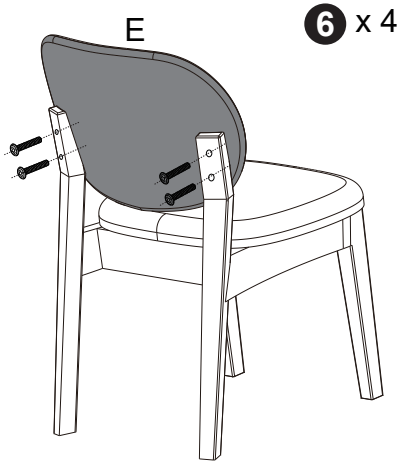

STEP 5

8 x 4



9 x 4



COMPLETE INSTALLATION

