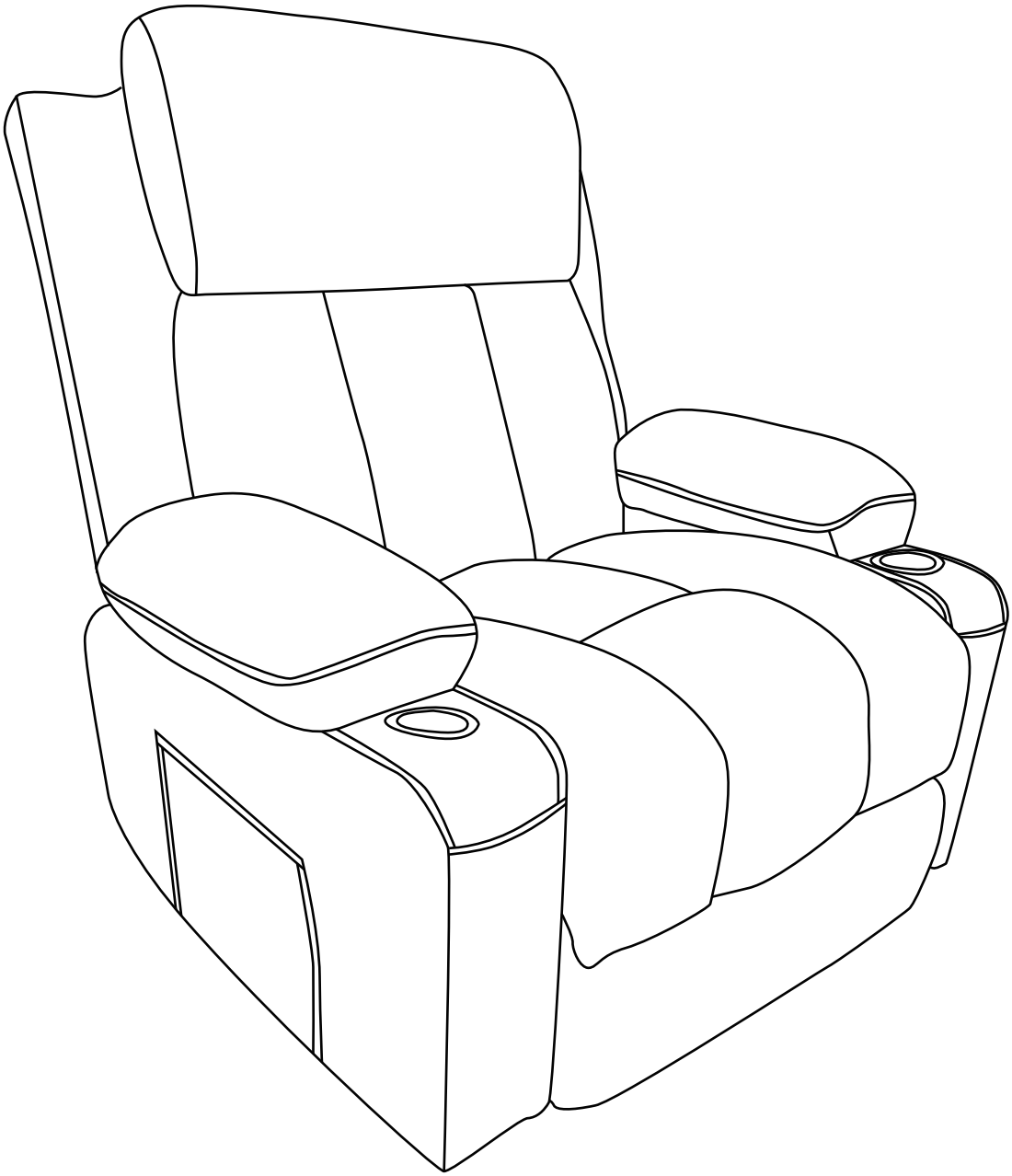

INSTRUCTION MANUAL

ASSEMBLY GUIDE

Congratulations, you now have a new function sofa with massage.

Before enjoy the comfort chair, you have to put it together.This Assembly Guide will take you through the basic assembly process. To make sure your assembly goes smoothly, please follow the assembly instructions, and especially the important safety information.

Also, while it is possible to assemble the chair on your own, having a second person to help you makes it even easier.

Have any question about parts, assembly steps or operation of the chair, just be free to contact us.
Please provide us with the following information to makesure that we'll give you an effective solution much faster:
1. Order Number
2. Detailed description of the order issue you encounter
3. Some pictures or video that might be of help to display your problem

Yours sincerely,
Customer Service Team

PACKAGE LIST

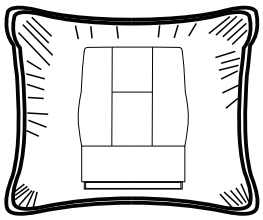

Seat cushion Ⓐ*1

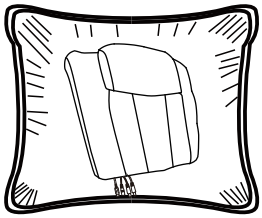

Back Ⓑ*1

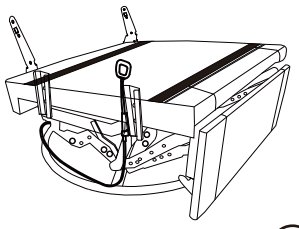

Seat frame Ⓒ*1

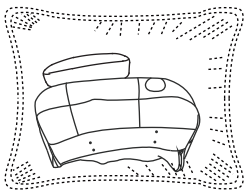

F (R)
Armrest cover Ⓕ

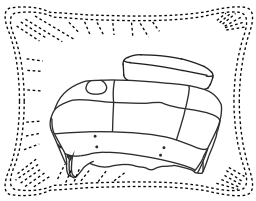

F (L)
Armrest cover Ⓕ

Connector *4

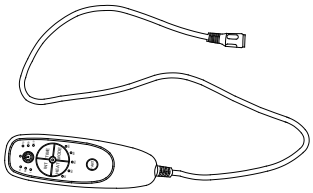

Massager remote control board Ⓖ*1

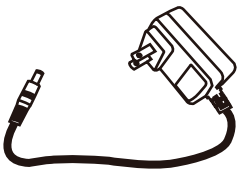

Massager power supply Ⓗ*1

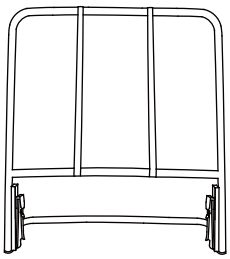

Back frame *1

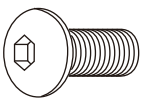

Bolts
M6*16mm Ⓝ*8+1(extra)

Spanner Ⓞ*1

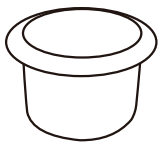

Cup holder *2

PACKAGE LIST

STEP 1:Flip the seat frame over with the footrest facing upwards,Pull the cord to open the footrest，Then remove the compressed back and accessory box from the frame.
（Instruction: Do not force the footrest.）

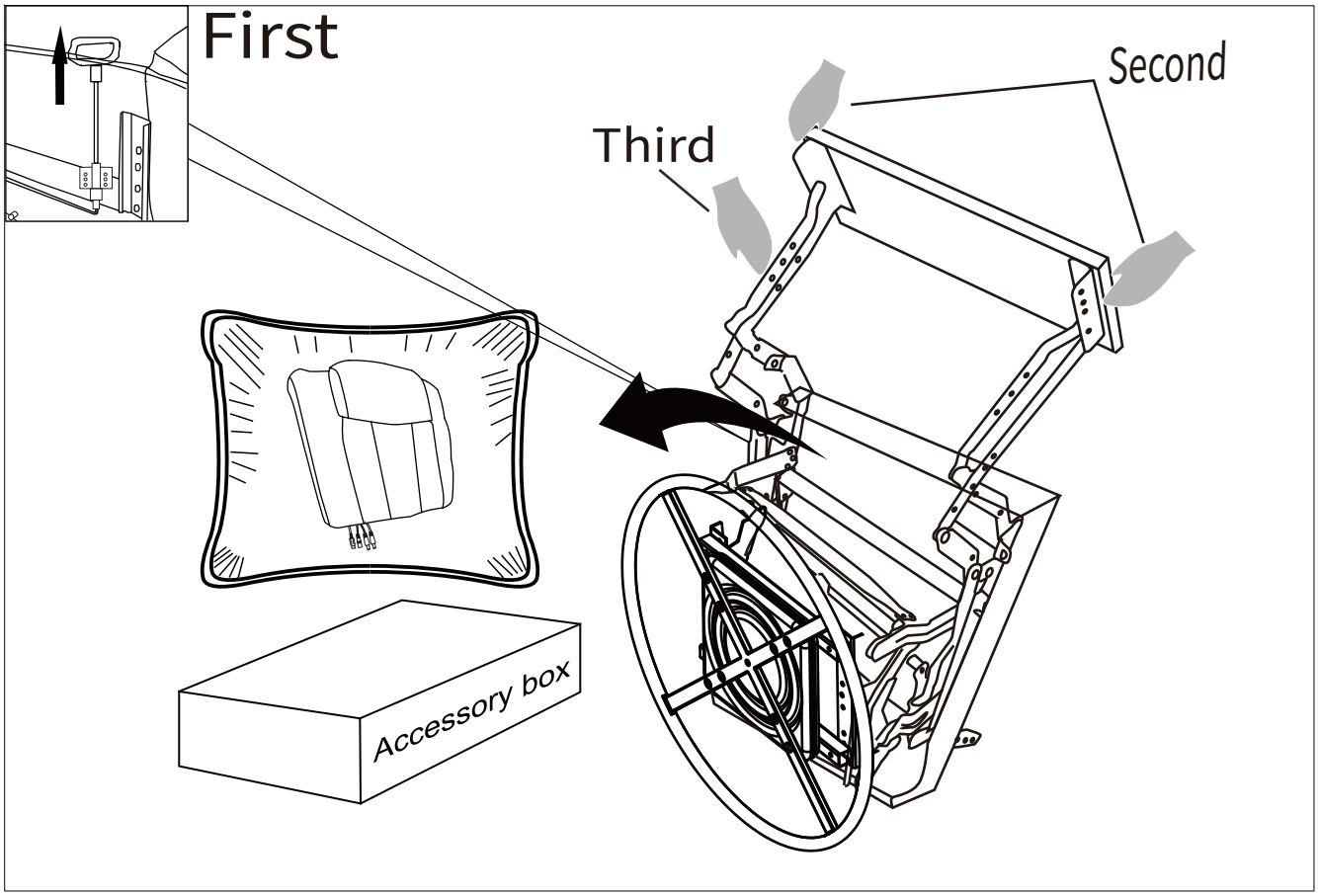

STEP 2:Open the compression bag and remove the soft bag and gently pat the soft package with your hand.

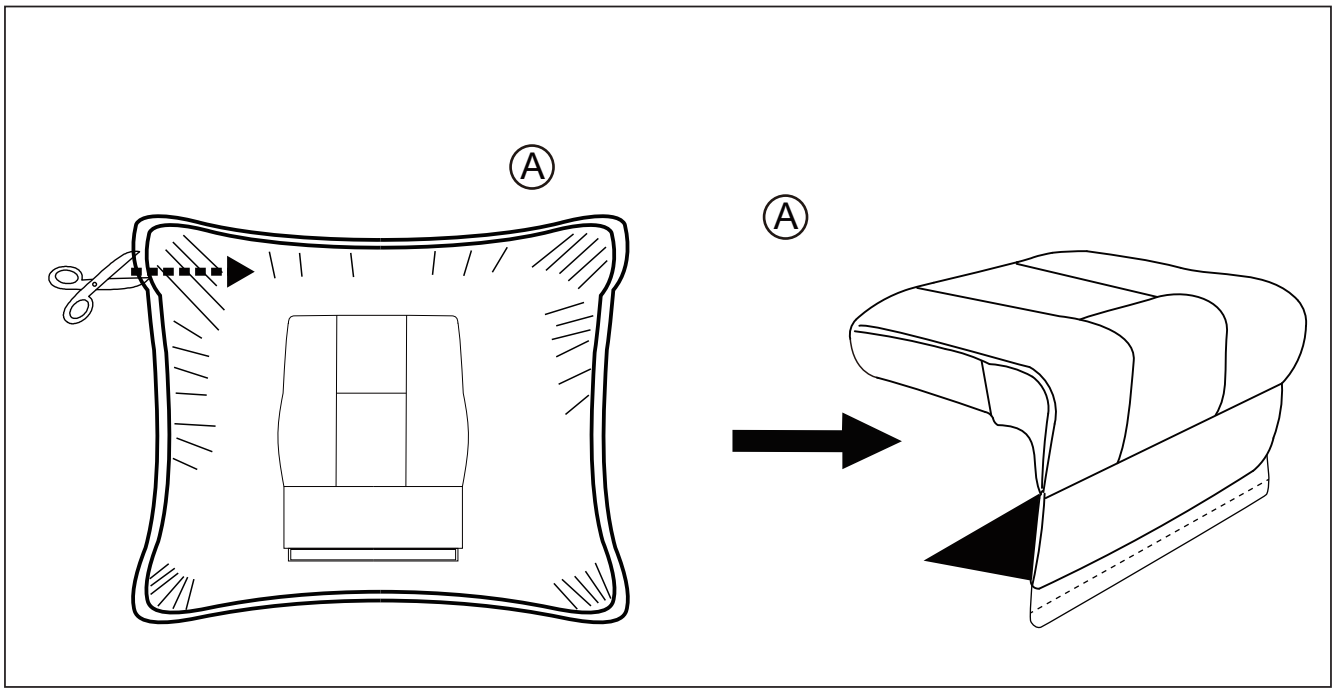

ASSEMBLY INSTRUCTION

STEP 3:Open the compression bag and remove the soft bag,gently pat them.

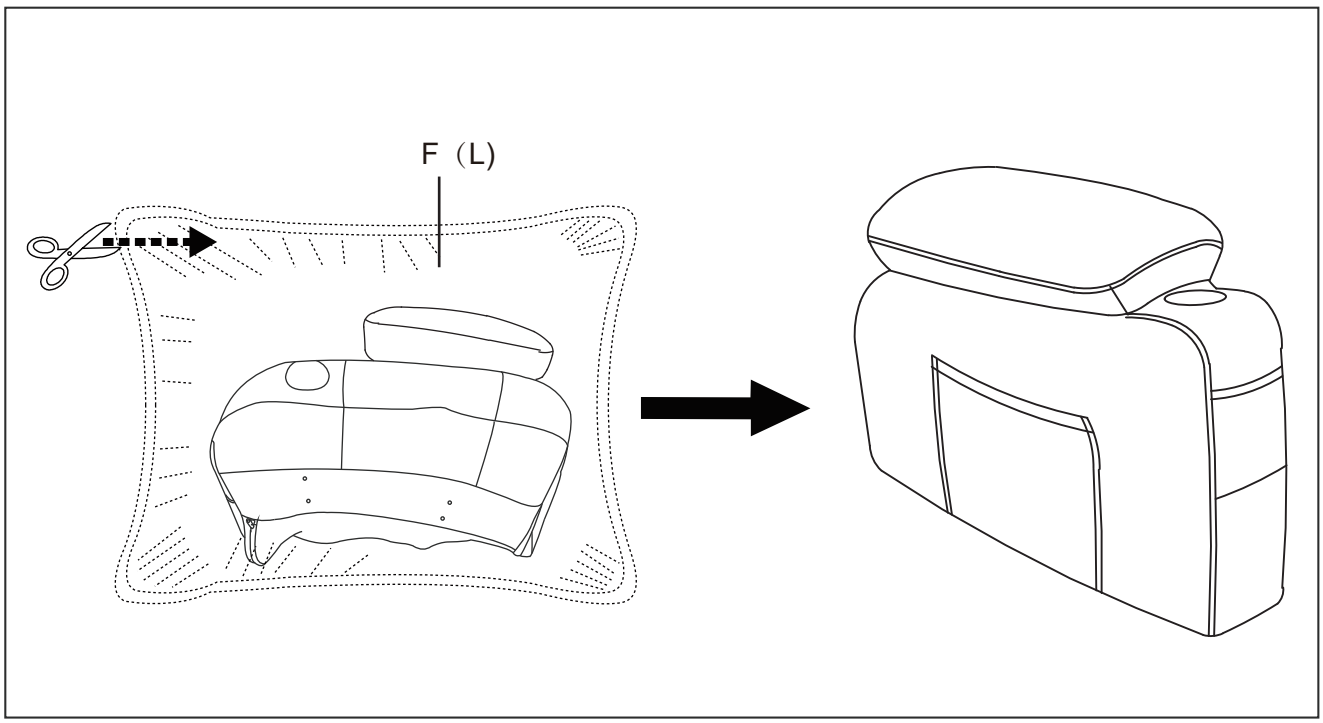

STEP 4:Open the compression bag and remove the soft bag,gently pat them..

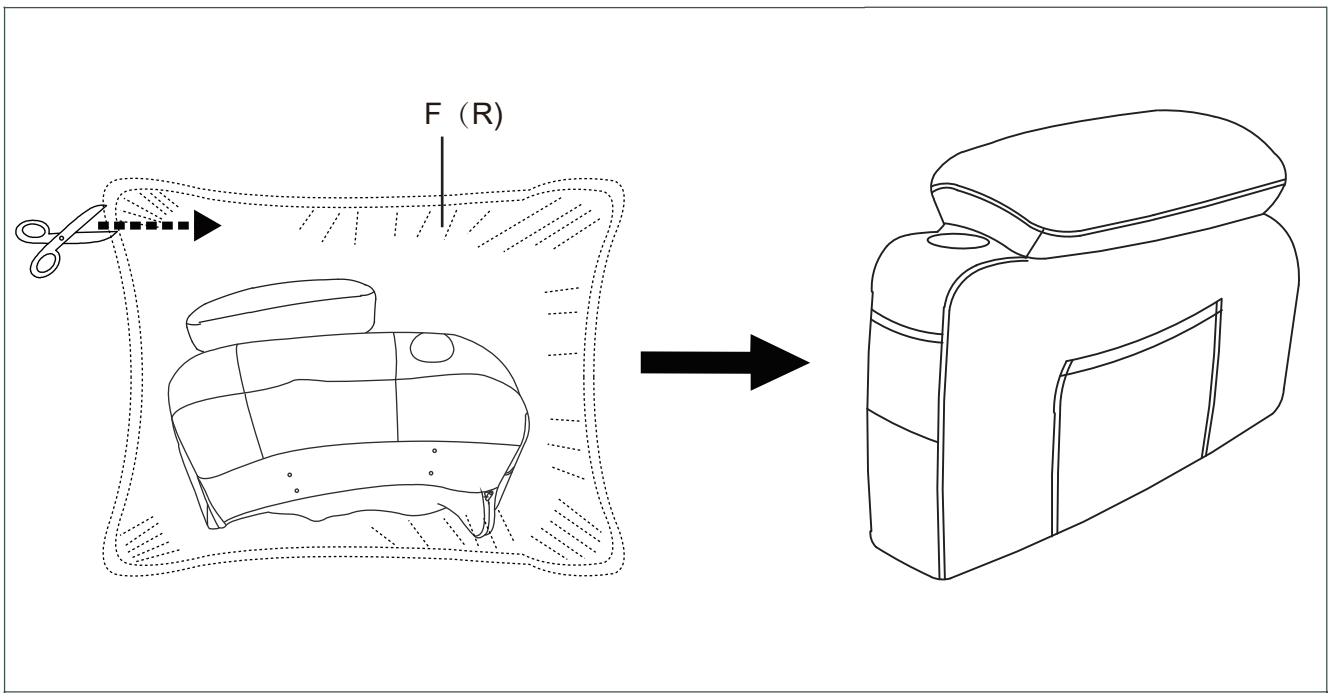

ASSEMBLY INSTRUCTION

STEP 5:Fix the connector to the inside of the armrest with M6x16mm bolts, paying attention to the direction of fixing the connector.

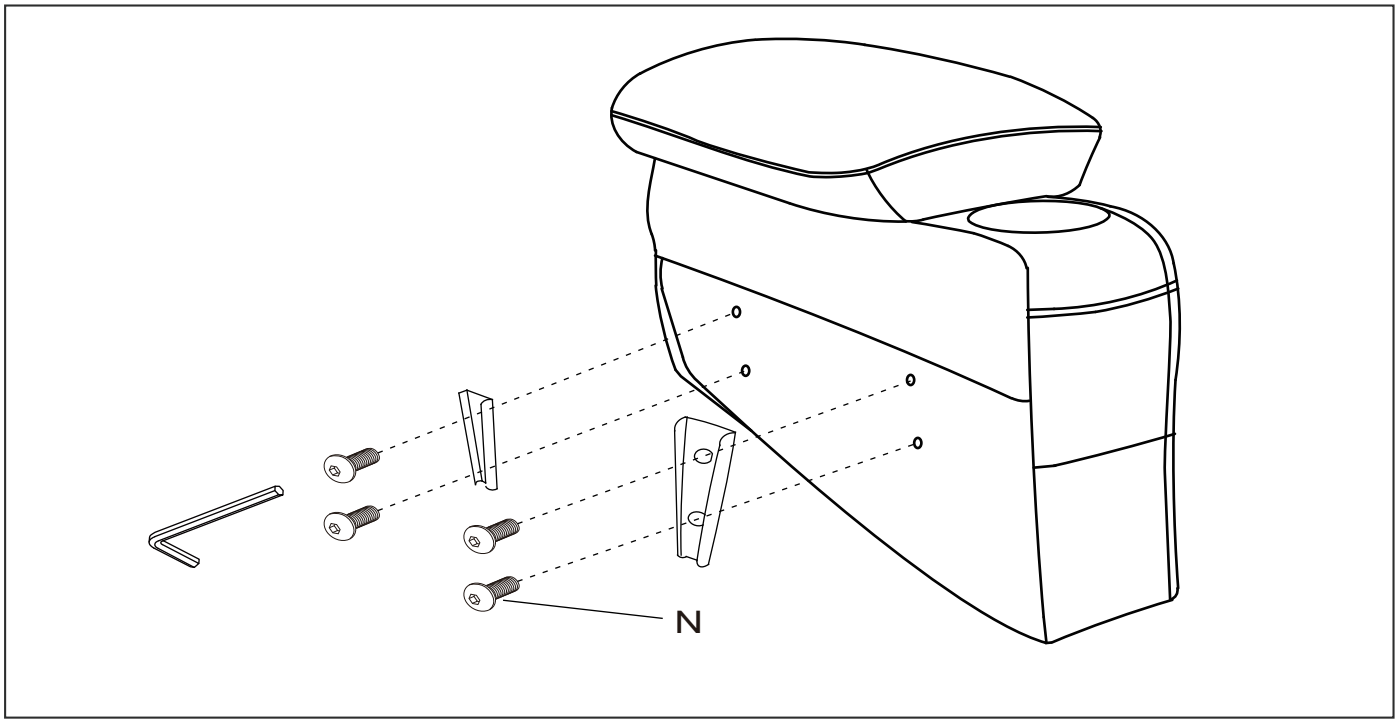

STEP 6:Fix the connector to the inside of the armrest with M6x16mm bolts, paying attention to the direction of fixing the connector.

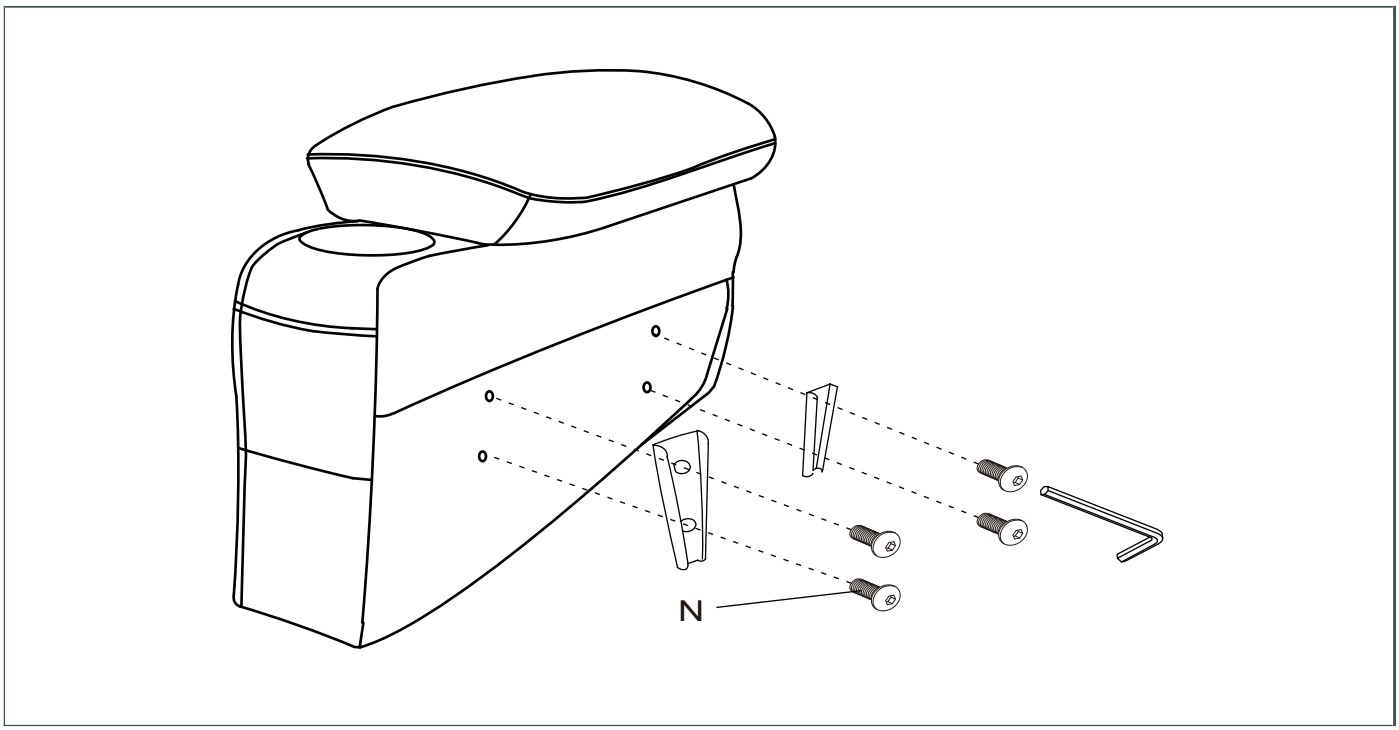

ASSEMBLY IN STRUCTION

STEP 7:Install the armrest cup holder.

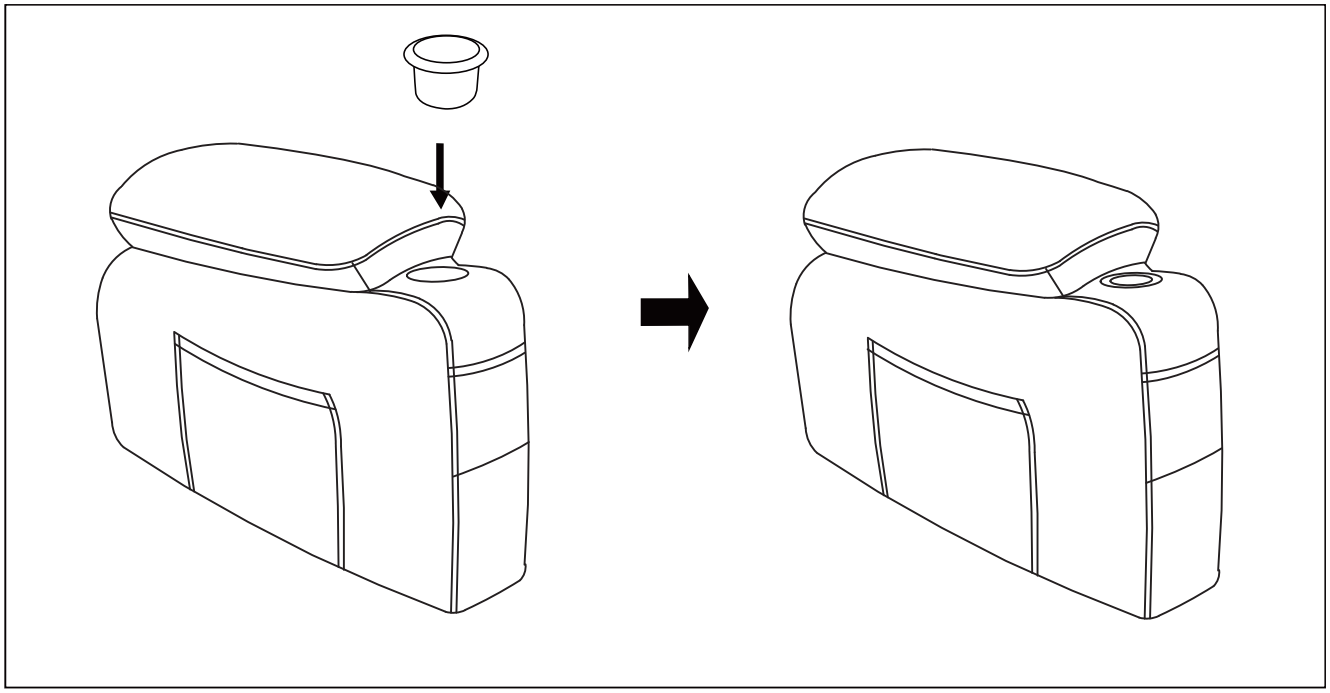

STEP 8:Insert arms so that they can fit into the seat,you will hear a“click"when they are engaged.

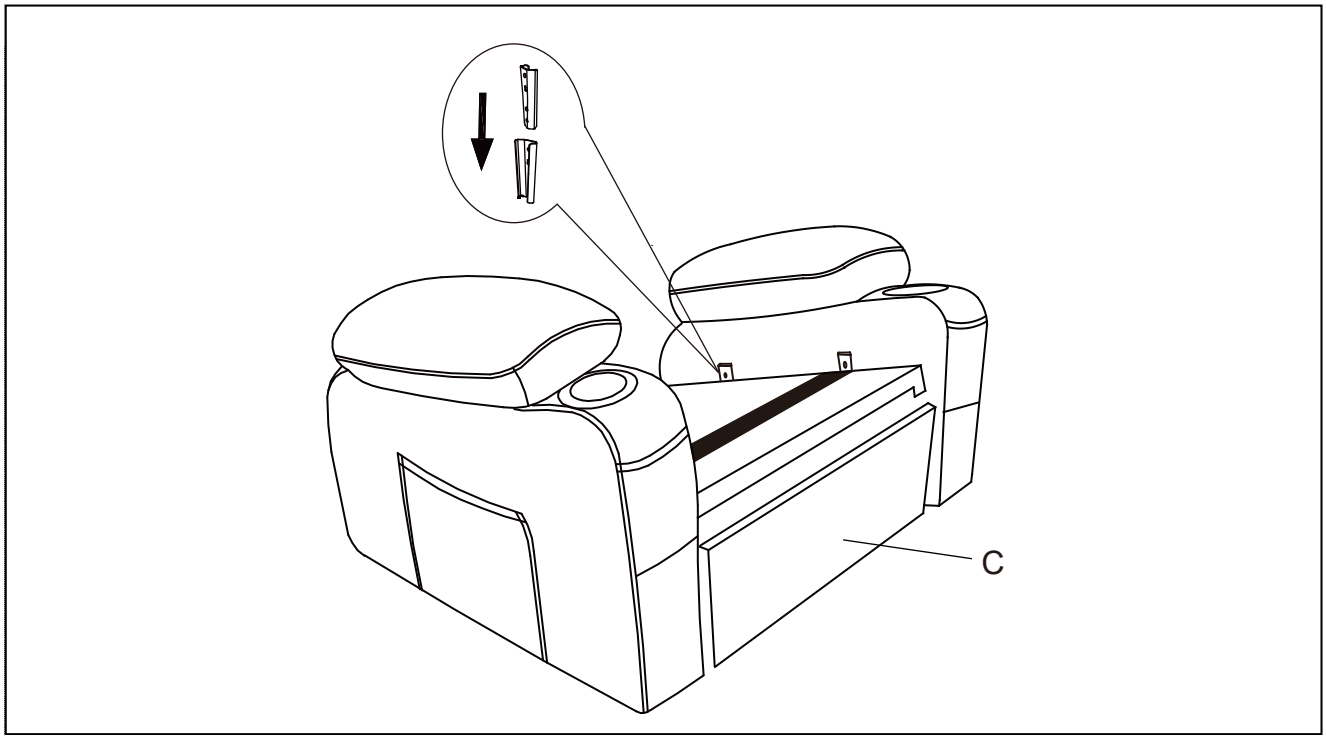

ASSEMBLY IN STRUCTION

STEP 9: The velcro on the rack sticks to the bottom of the saddle, and the cool cloth at the back of the saddle goes through the frame pedal and sticks to velcro at the front of the saddle. (Note that the handle of the pull tab should be left exposed)

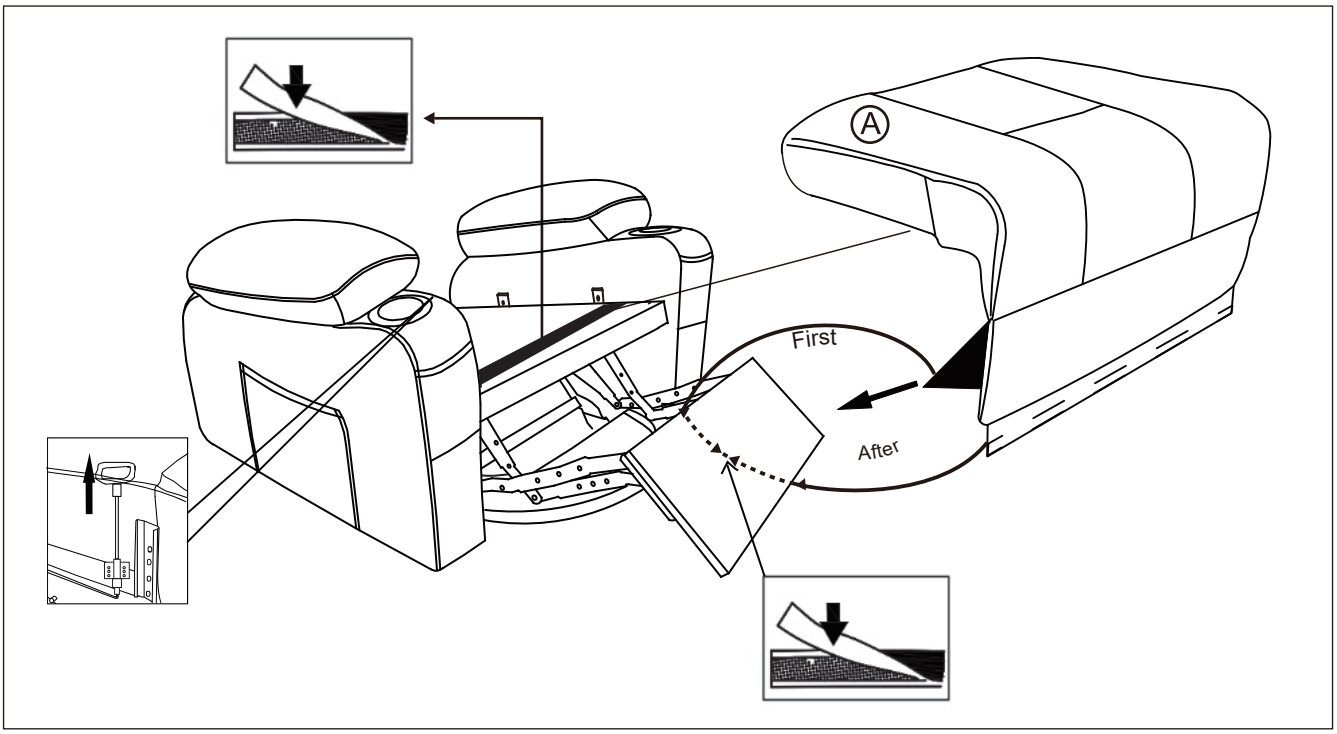

STEP 10:Open the compression bag and remove the soft bag and gently pat the soft package with your hand.

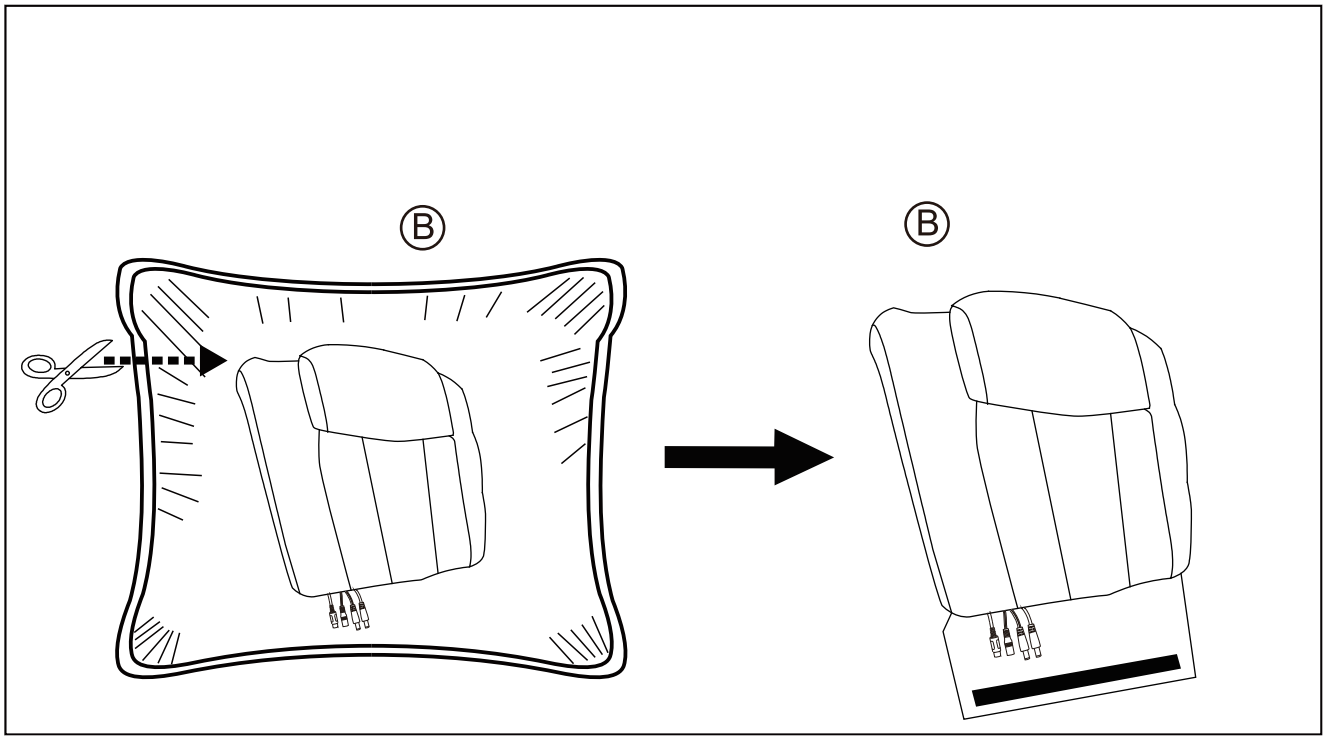

ASSEMBLY IN STRUCTION

STEP 11：Zip the backpack and back frame, and then connect the backpack and back frame with velcro.Gently pat them.

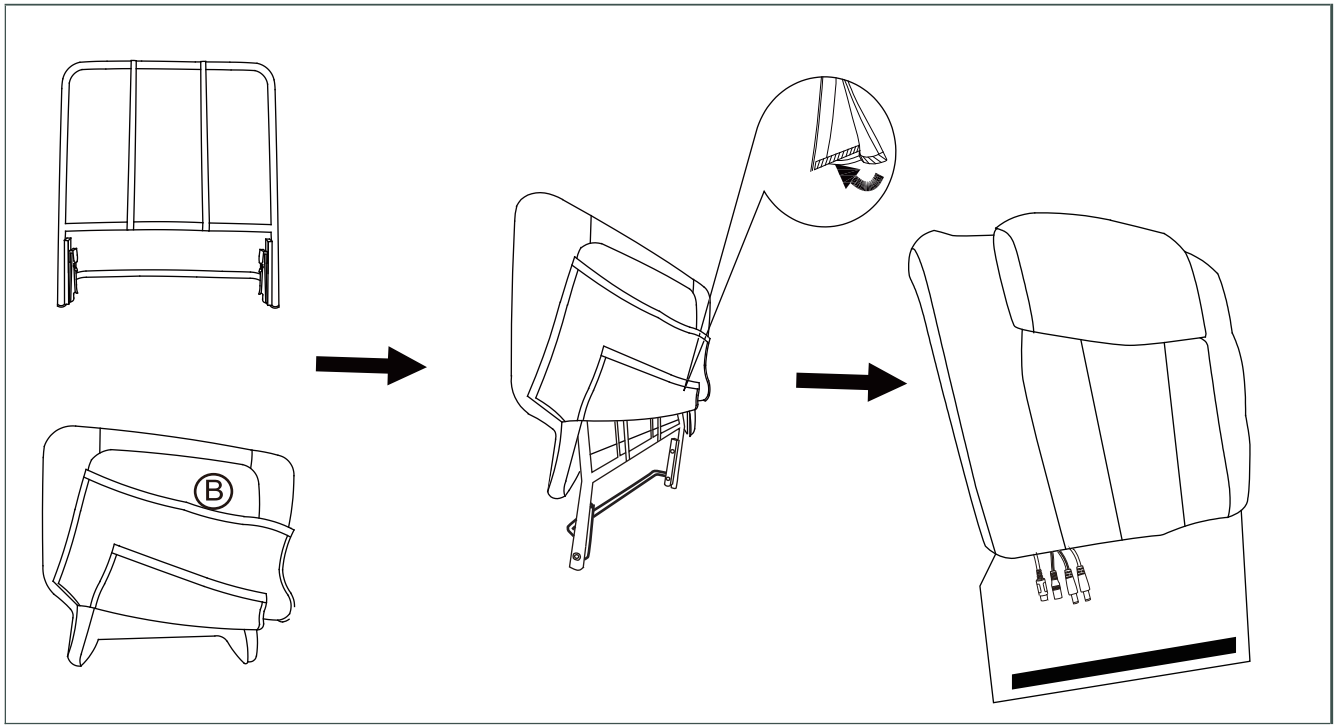

TIPS:If there are any problems during the installation process, please promptly seek assistance from the customer service team.(Key Direction: During installation, ensure that the protruding side of the crossbar faces the same direction as the front of the backrest.)

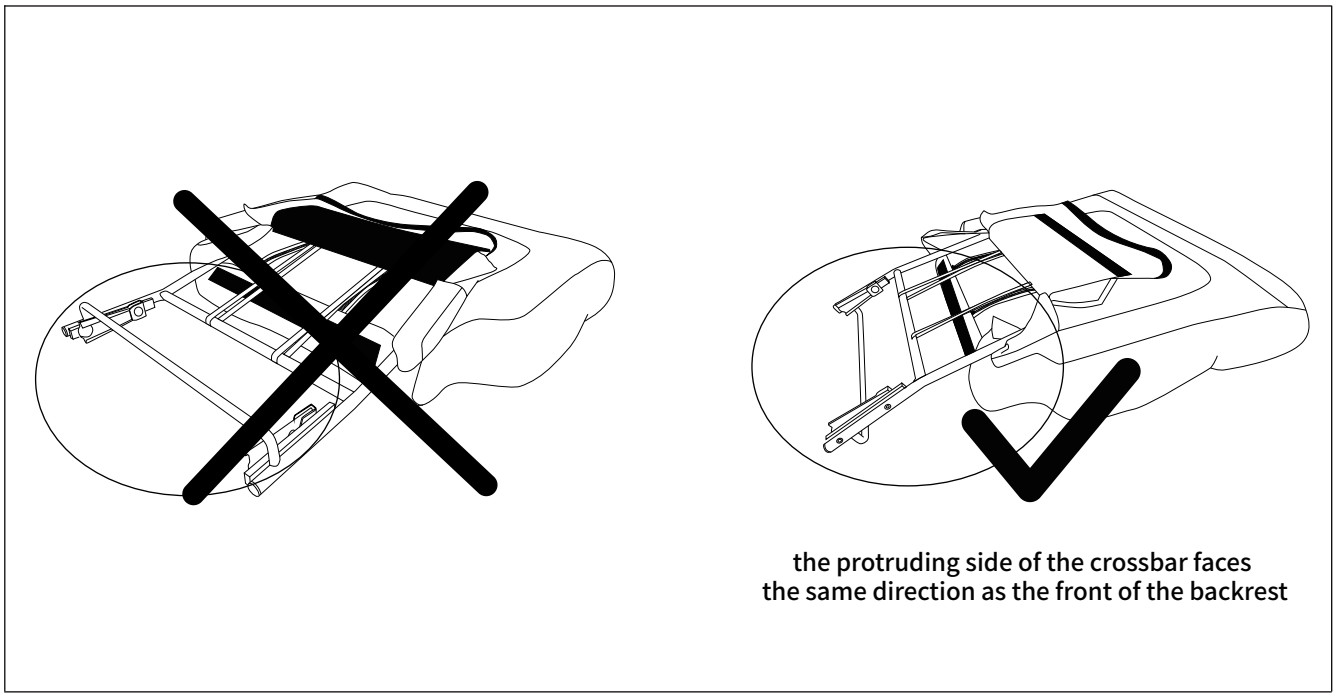

ASSEMBLY IN STRUCTION

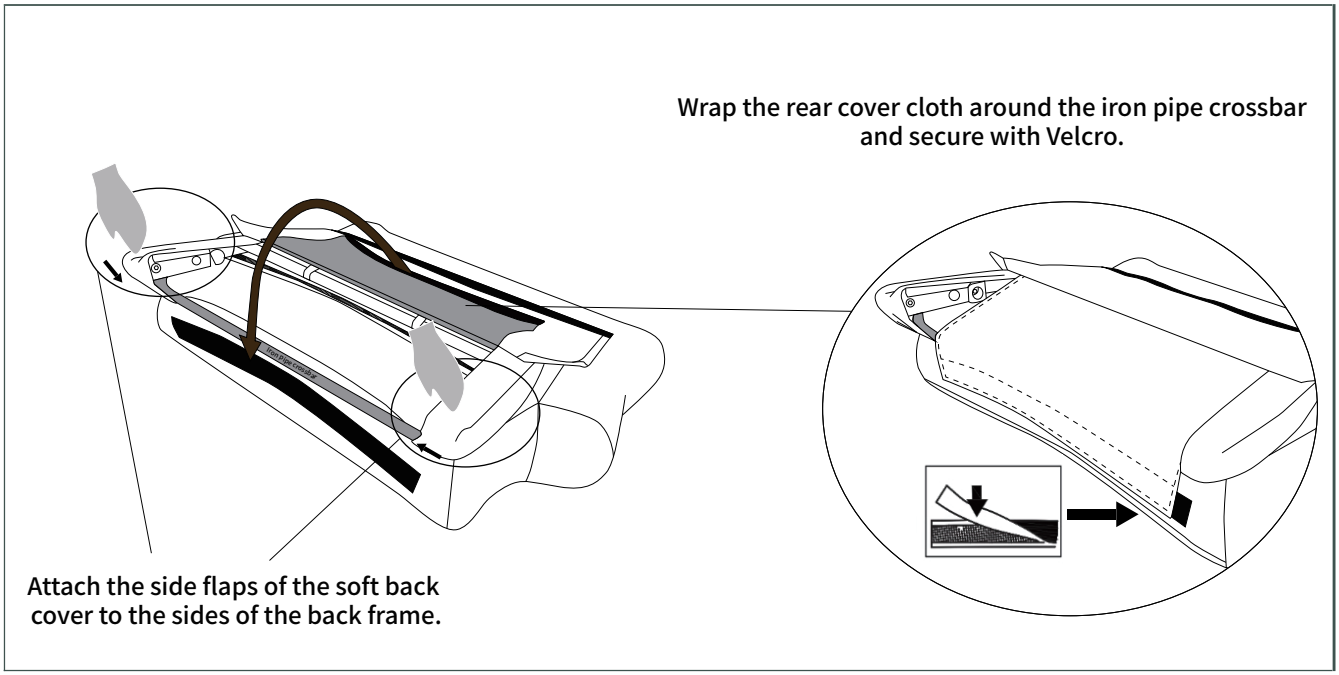

STEP 12：Plug the back pad into the seat frame, and then connect the massager line white and white, red and red, black and power lines, and the massage line with the hand controller.

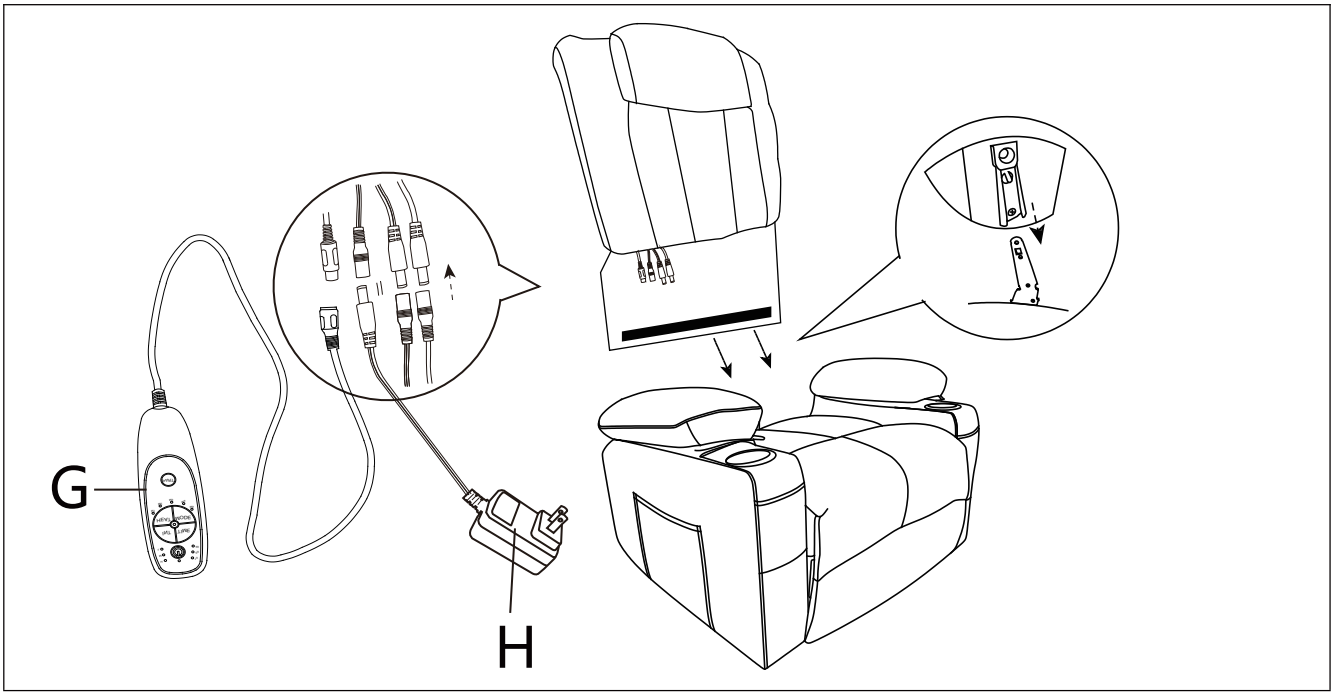

ASSEMBLY IN STRUCTION

STEP 13:Stick the velcro from the back frame to the seat frame.

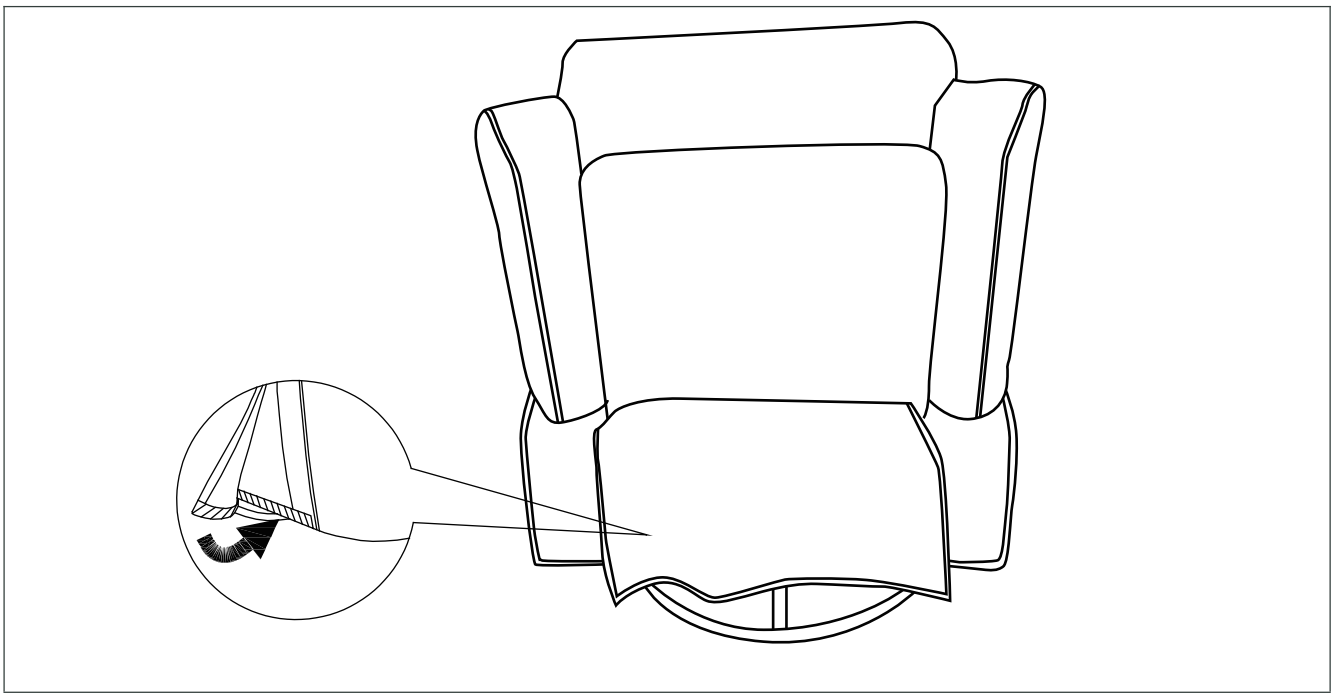

ASSEMBLY IN STRUCTION

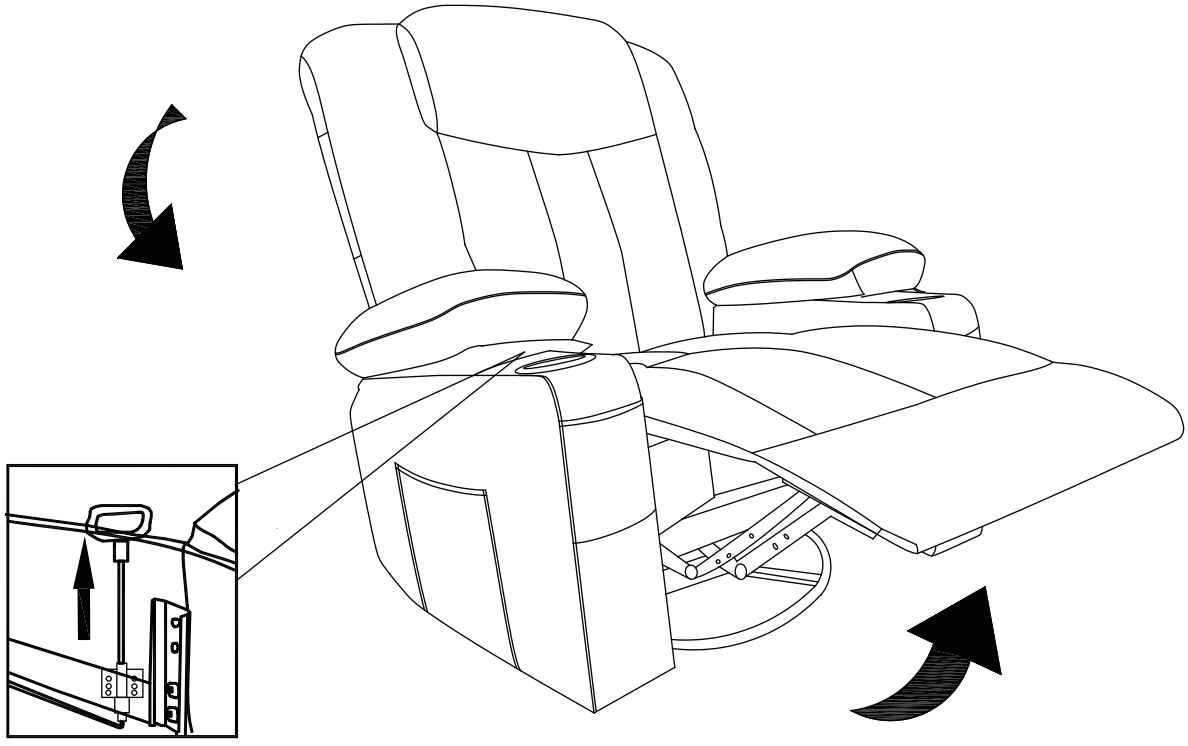

Pull the handle to spread out the SOFA

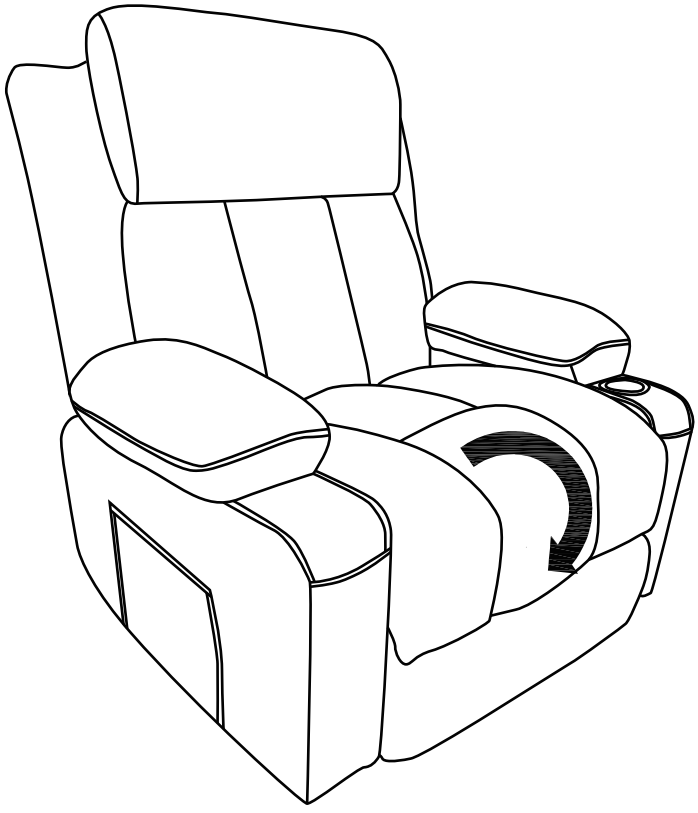

Pull back the SOFA with your legs

Congratulations!You've assembled

Your Sofa!

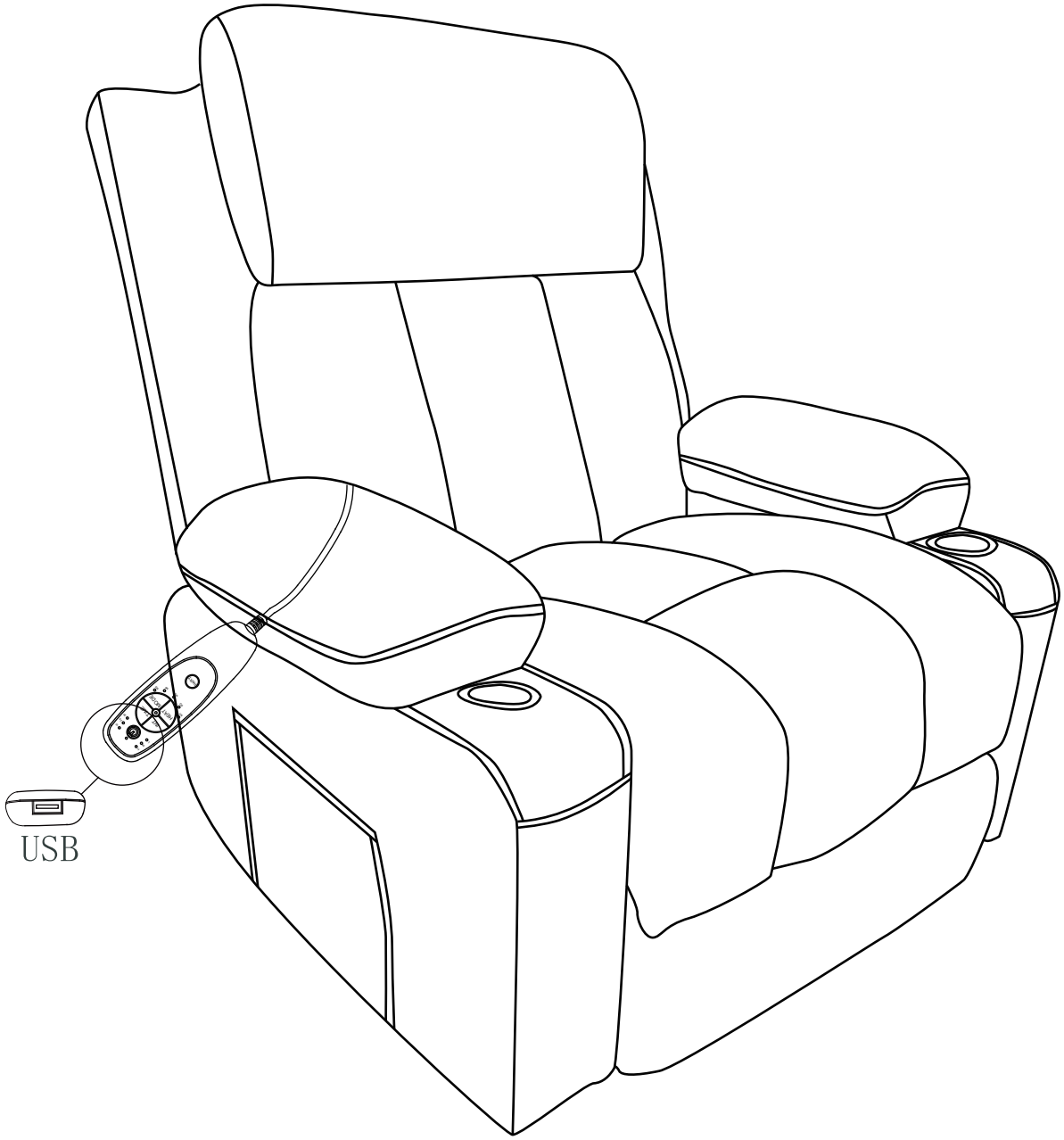

Note: Since the cushion is packed in compression, after the product is installed, you need to tap and adjust the cushion which can help restore fullness.After two days, you will get an Overstuffed Recliner as picture shows.

MASSAGE CHAIR

READ ALL INSTRUCTIONS

BEFORE USING THE ITEM

REMOTE CONTROL

Function of remote

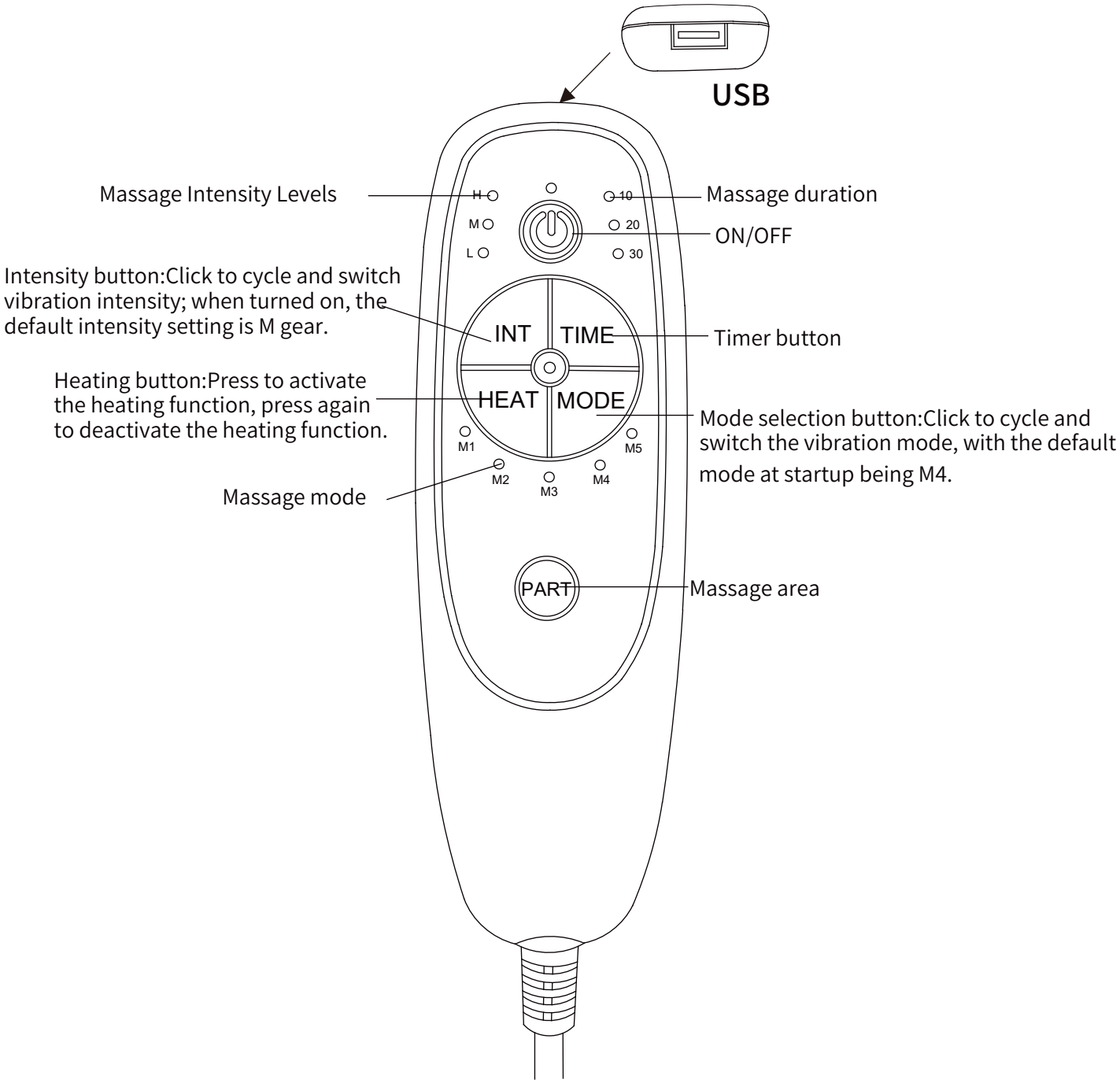

Ⅰ、Specifications of power adapter

Power on in standby state. The user can realize the function through the hand controller controler control

Input:AC100-240V,50HZ/60HZ;Output:DC12V2A.

Ⅱ、Product features

1、Motor vibration at position 8

2、1-way heating plate

3、Three-segment timing, the default timing shutdown time is 10Min

4、3rd gear vibration intensity

5、5 vibration modes

6、Support USB charging 5V 2.0A

Ⅲ、Function details

1、ON/OFF：Switch on and off

2、TIME：Positioning cycle by massage time (10/20/30 min) , Boot default 10min

3、MODE：Tap the five vibration modes to switch（M1/M2/M3/M4/M5）,The default startup mode is M4

4、INT：Switch point by vibration intensity（H/M/L）,Boot the default M file (medium Files)

5、HEAT：Click heating switch circulation

6、PART：Vibration positioning key , Boot the default vibration is full on, tap to switch to a single part vibration

7、Strength indicator

8、Time indicator

9、Mode indicator

10、USB charging port

Warnings

1.Sit down in the chair gently. To avoid tipping over, do not throw yourself into the chair. Move the chair into the reclining position slowly, making sure that no children or pets are in close proximity. Do not allow children to play on or around the chair, particularly when it is in an open position.
2.Close the recliner completely before getting out of it.
3.Never sit on the footrest when it is open, even if it is a child.
4.To eliminate the risk of tipping over, do not sit on the arms or footrest of the chair.
5.This chair is designed to be used by 1 adult at a time.
6.Please forbid people with the following ailments from using this sofa: Those people with severe symptoms of heart disease, high blood pressure, cerebral thrombosis and others who are sensitive to heat or completely insensitive to heat, those with brittle bones or have issues with waist support pregnant women, children and others where it has been determined they are not suitable to use this product under the guidance of doctors.
7.To fully recline the sofa, ensure the sofa well, you need to put the sofa at least 19 inches away from the wall or any other obstacle.
8.Product cannot touch water, fire, etc. Product can also not come in contact with sharp objects (knives, nails, etc.)

Maintenance Manual Instructions

1.To avoid dropping, you should carry the sofa carefully.
2.If you find dirt and or stains on the chair, spray the sofa with a sofa specific cleaner then use a sponge or cloth to wipe the dirt away. Do not use water, soapy water or cleaner with waxed wooden areas. Take care to wipe the sofa carefully and gently.
3.Do not put the sofa in an area with direct sunlight and do not put the sofa directly in front of an air conditioner, this will fade the upholstery and make it brittle.

How to Disassemble
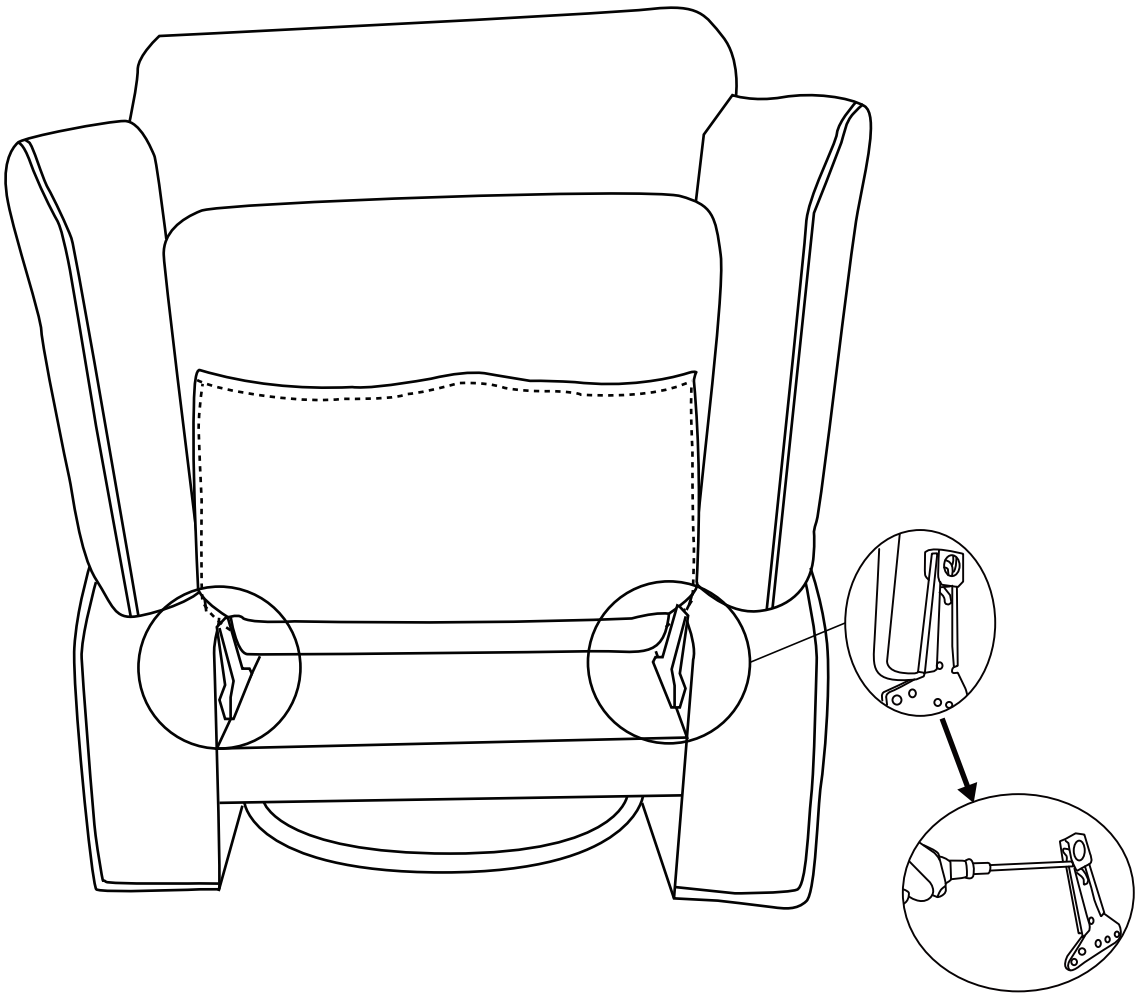
Please find a strong tool to prod the small piece of metal grooves, then the backrest will be pulled out. The tool is not included.