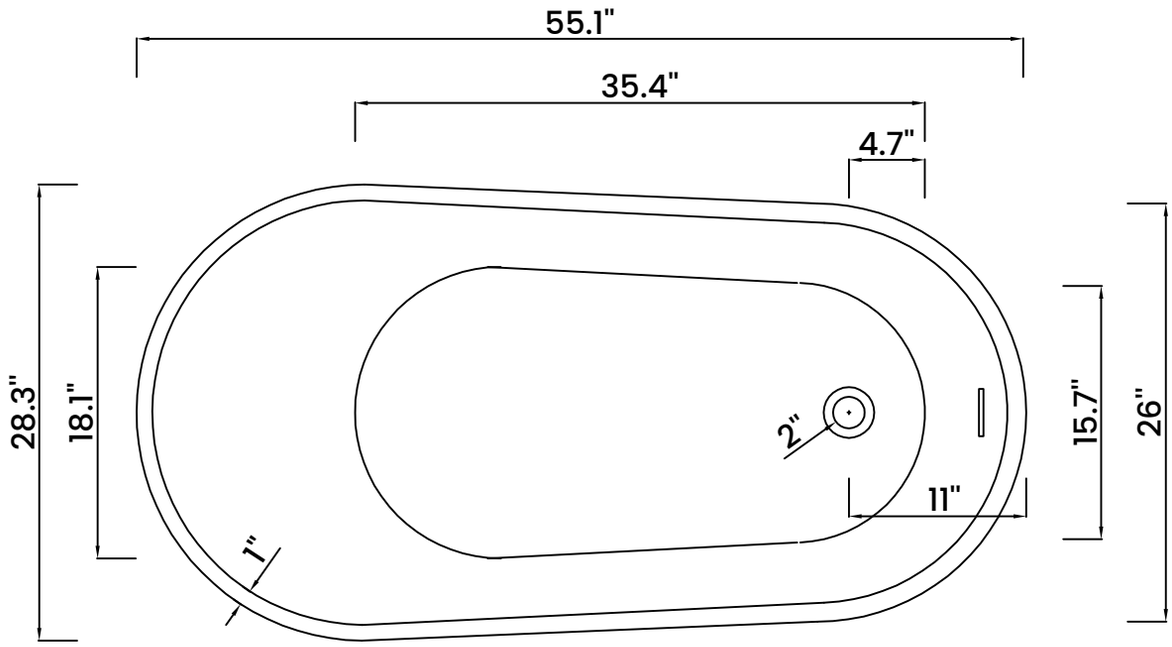
55.1"
35.4"
4.7"
28.3"
18.1"
2"
11"
15.7"
26"
1"

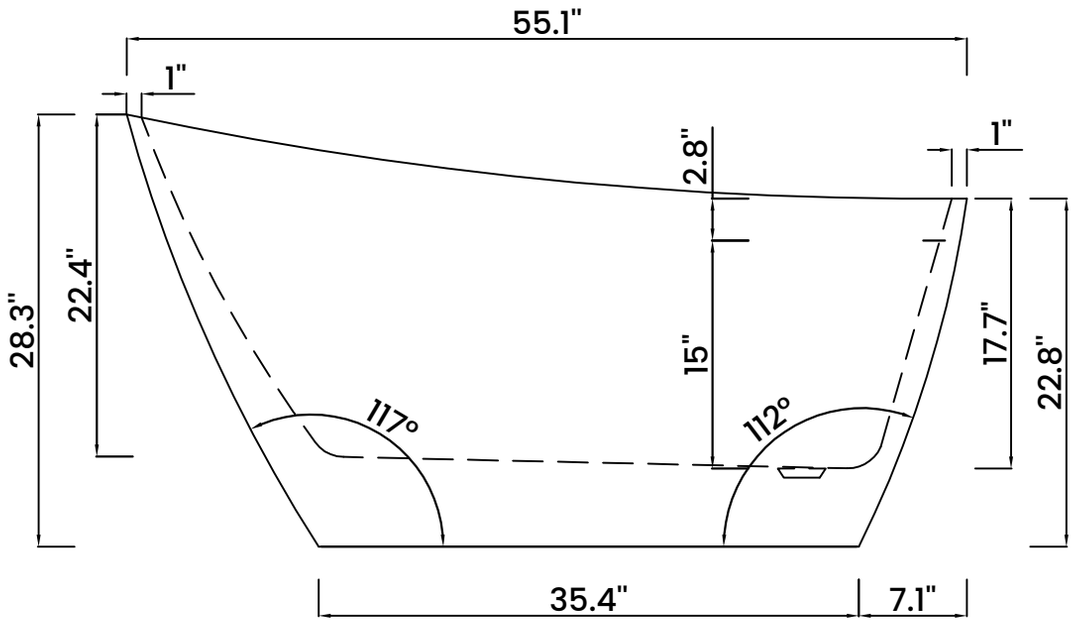
55.1"
1"
1"
2.8"
28.3"
22.4"
15"
17.7"
22.8"
117°
112°
35.4"
7.1"

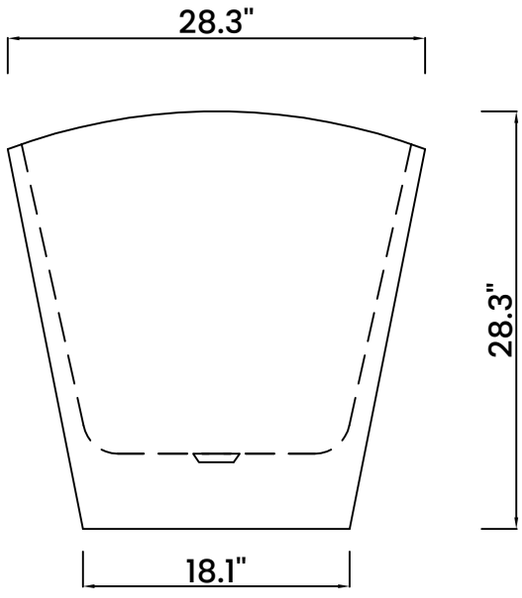
28.3"
28.3"
18.1"