12 x 18FT

WQG-031-3

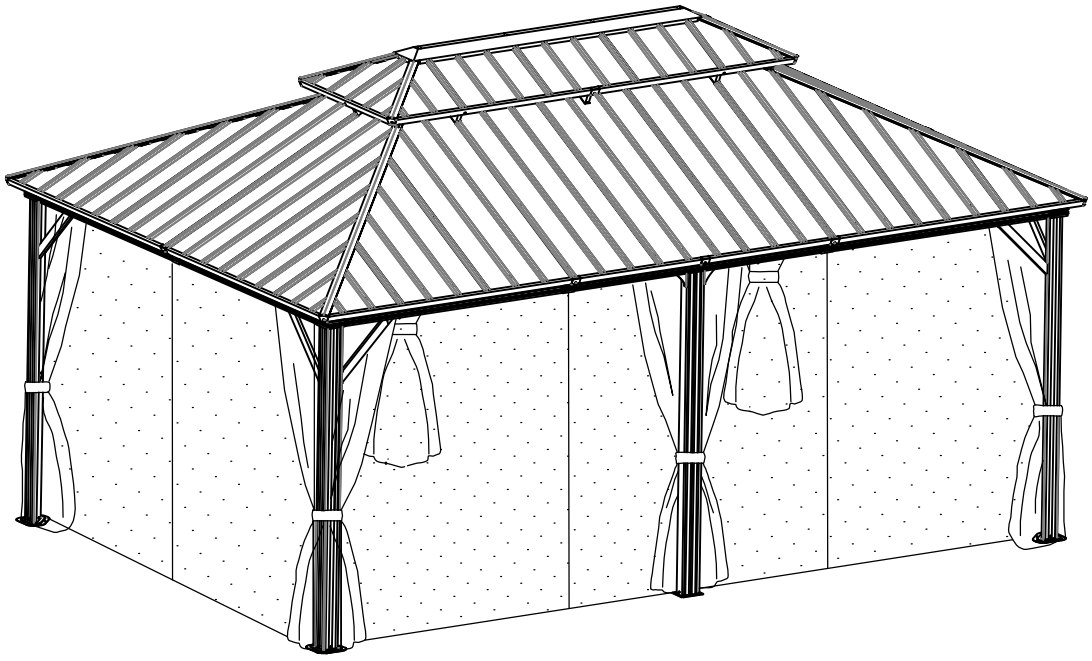



A 4x



B1 4x



B2 4x

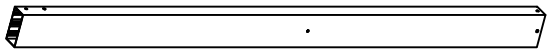

A2 2x



B8 2x



D 4x

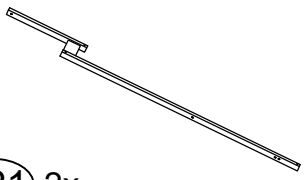

D21 2x

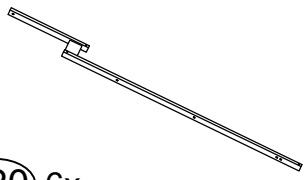

D20 6x



C1 4x



C2 4x



C11 4x



F1 4x



F2 4x

F5 4x



F8 3x

G1 2x

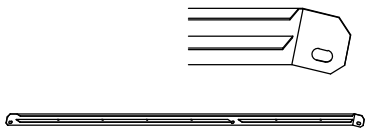

G7 2x



G8 2x

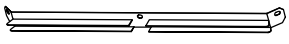

I1 2x

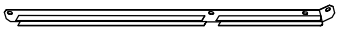

I7 2x



I8 2x



L5A 1x



M5 1x

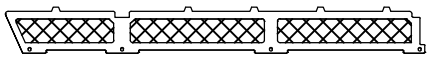

V5a 2x

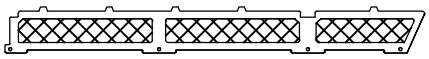

V5b 2x

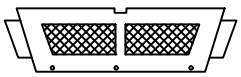

V1 2x

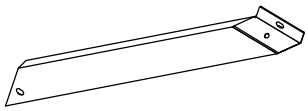

H 4x

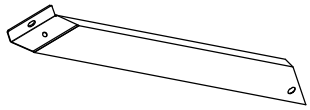

H1 4x



E5 4x

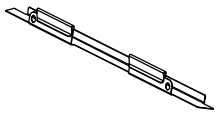

Z 64x

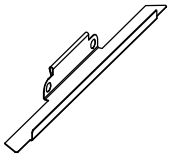

Z1 8x

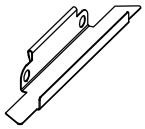

Z2 8x

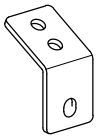

Q1 8x



N 12x



N1 10x

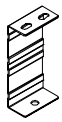

K1 6x

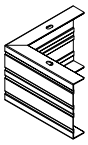

K 4x

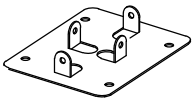

J1 2x

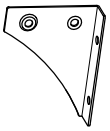

W1 2x

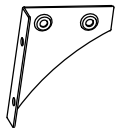

W2 2x

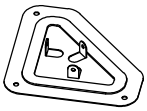

J 4x

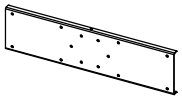

P 6x

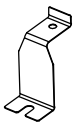

V 6x



Y 92x



U 144x



Q3 8x

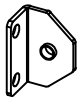

Q4 8x

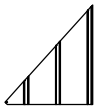

X1 4x

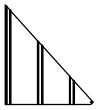

X2 4x

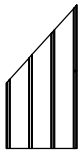

X3 4x

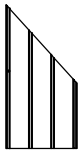

X4 4x



X5 4x



X6 4x

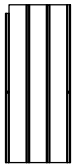

X7 2x

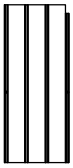

X8 2x

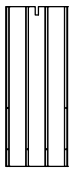

X9 2x

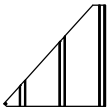

S1 4x

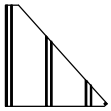

S2 4x

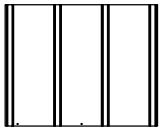

S3 6x

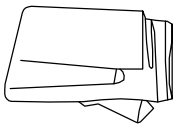

T 4x + 2x

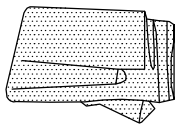

T1 4x + 2x



M6x15

1 244x



M6x23

2 80x



M6x25

3 12x



ST 4.8x12

4 8x

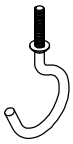

5 **3x**



M6x45

7 12x



8 16x



M6x10

9 12x

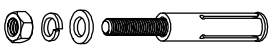

10 20x

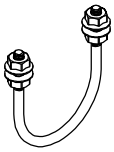

11 1x



4mm

12 2x

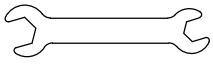

14 1x



M5x15

15 32x

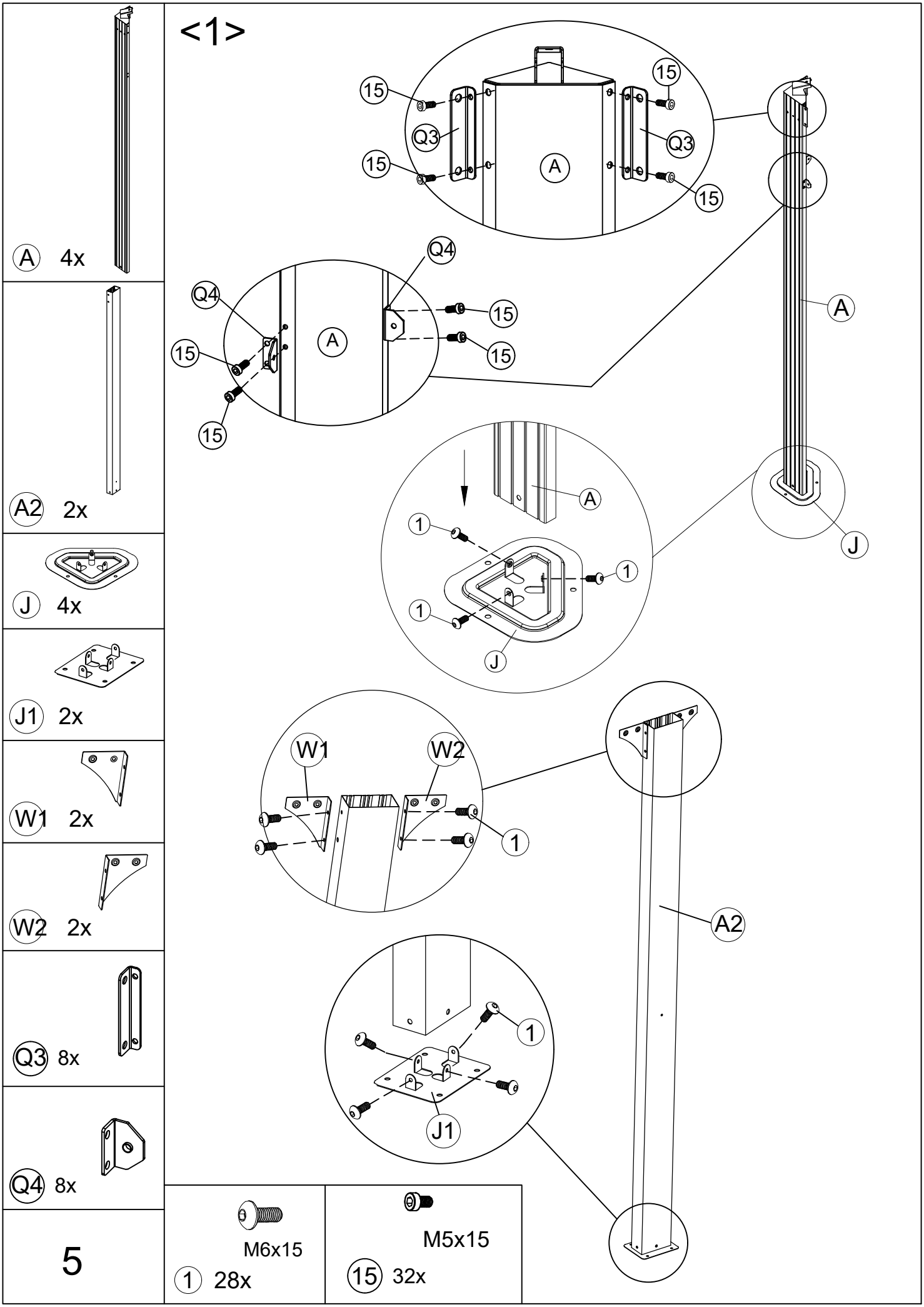
<1>
A 4x
A2 2x
J 4x
J1 2x
W1 2x
W2 2x
Q3 8x
Q4 8x
5
M6x15
1 28x
M5x15
15 32x
15
Q3
A
Q4
J
1
W1
W2
A2
J1



B1 2x

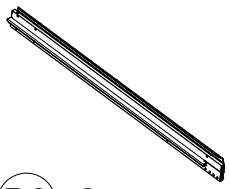

B2 2x

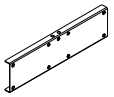

P 2x



M6x15

1 16x

<2>

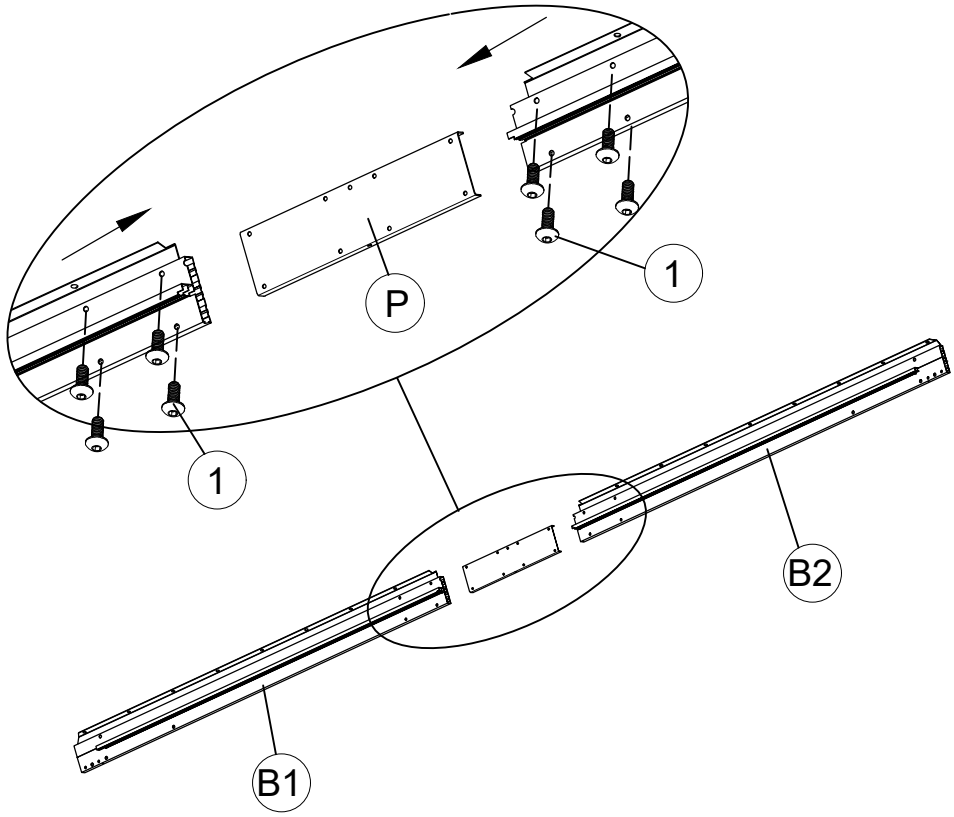



B1 2x

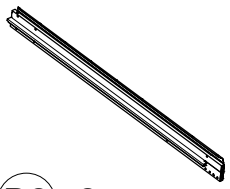

B2 2x



B8 2x

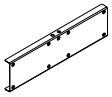

P 4x



M6x15

1 32x

<4>

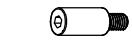

8 16x



M6x15

1 16x

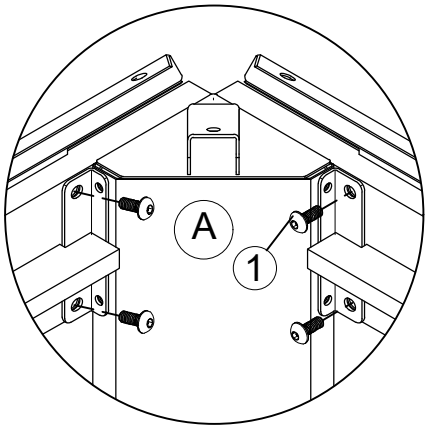

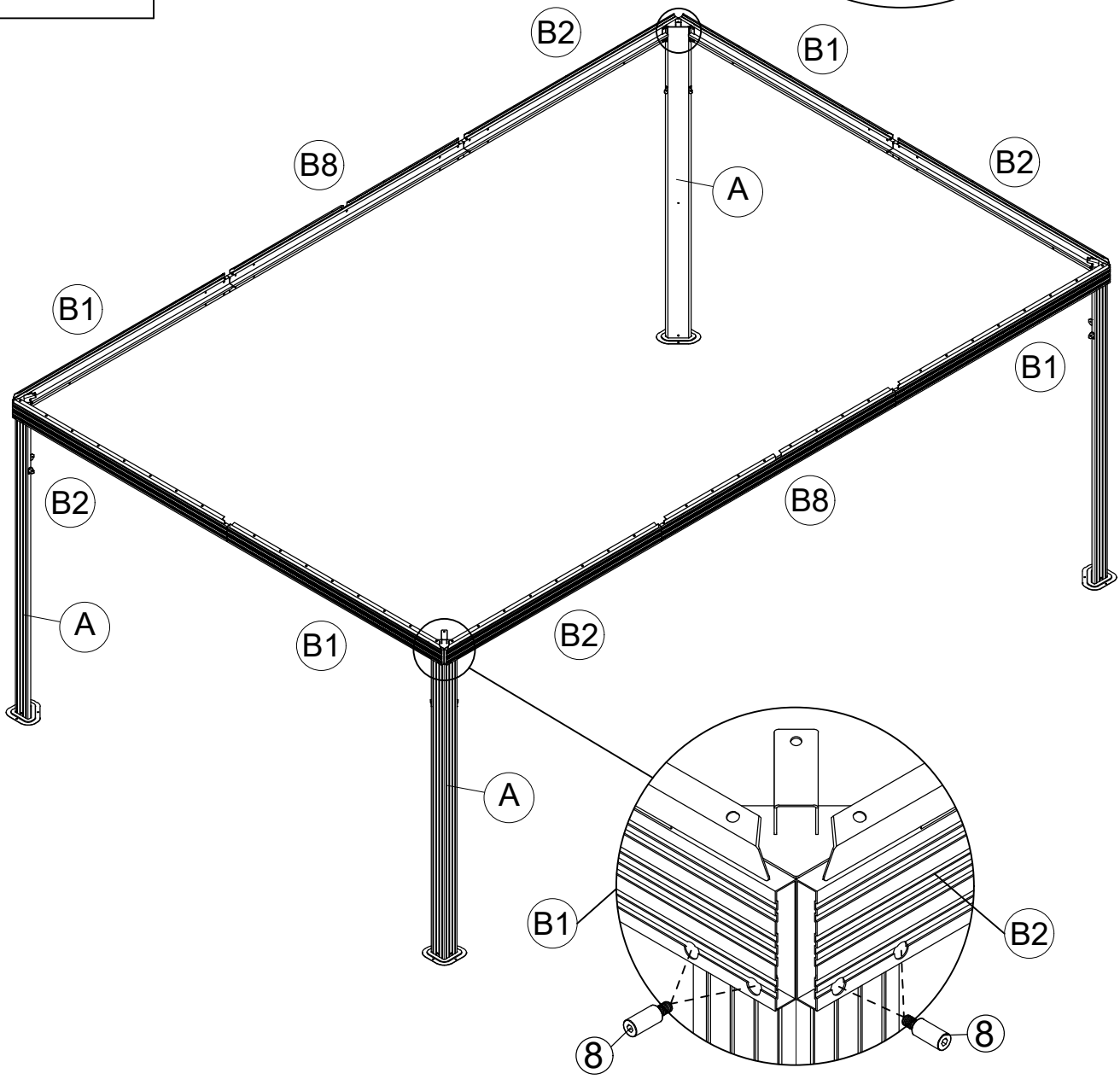

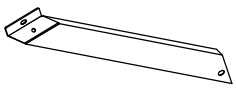

H1 4x

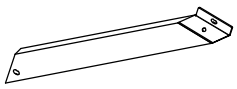

H 4x



M6x15

1 16x

<5>

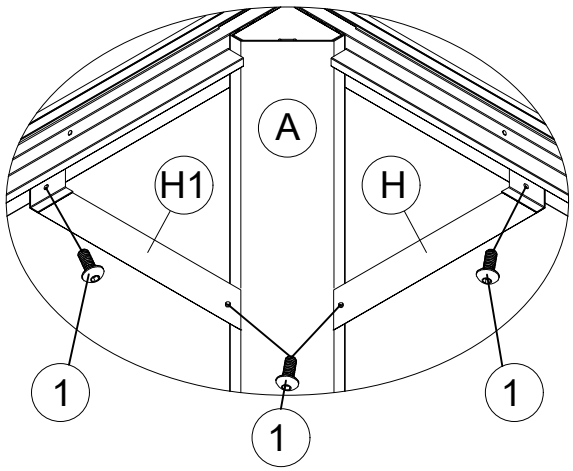

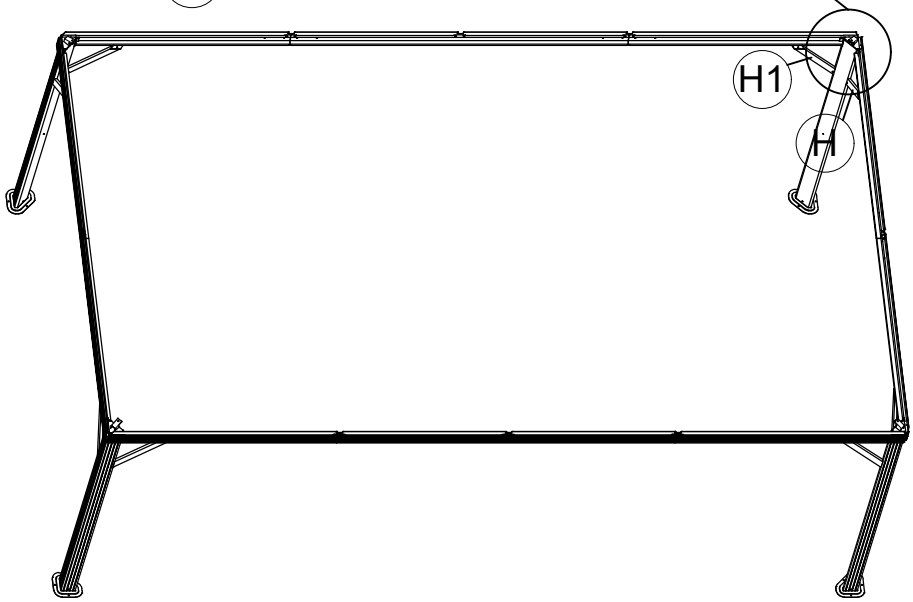

i d1=d2

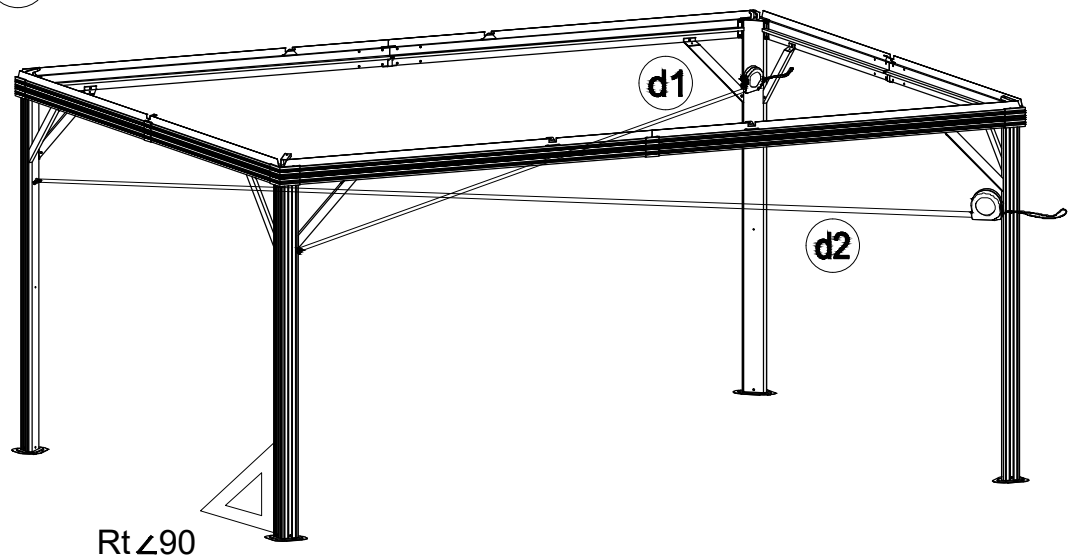

Tips: Please measure to make sure the length of d1 is equal to d2 before moving to next step to ensure a square frame and best results. Keep the beam at right angles to the post, the post at right angles to the ground, and keep the beam horizontal.

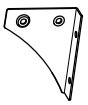

W1 2x

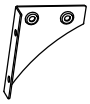

W2 2x



M6x15

1 8x



10 20x

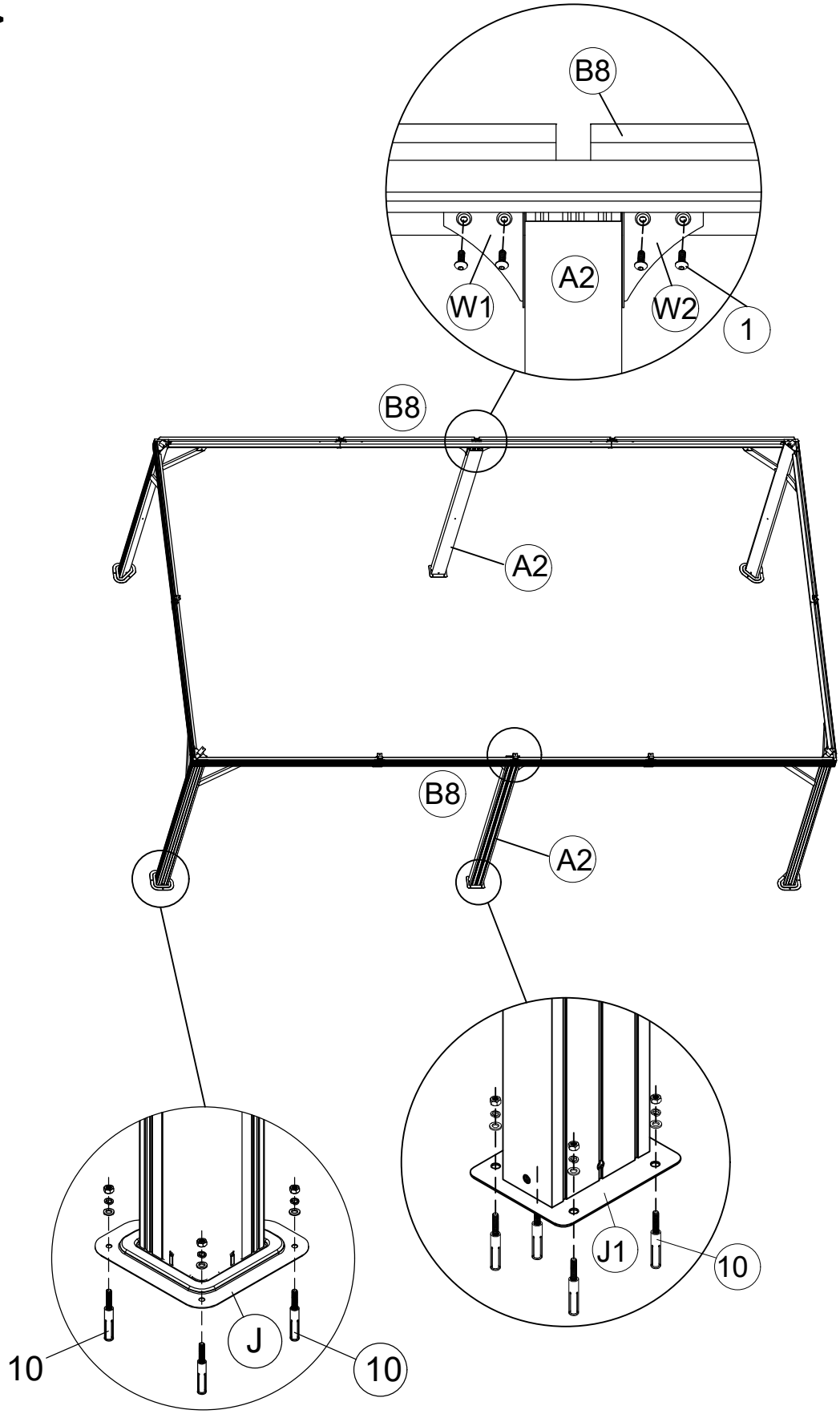

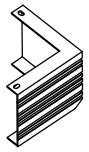

K 4x

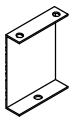

K1 6x



U 144x

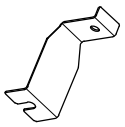

V 6x

M6x15

1 18x



ST4.8x12

4 8x



D 4x



E5 4x

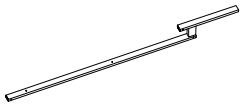

D21 2x

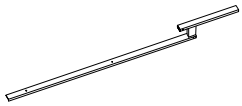

D20 6x

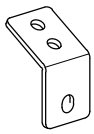

Q1 8x



M6x15

1 24x

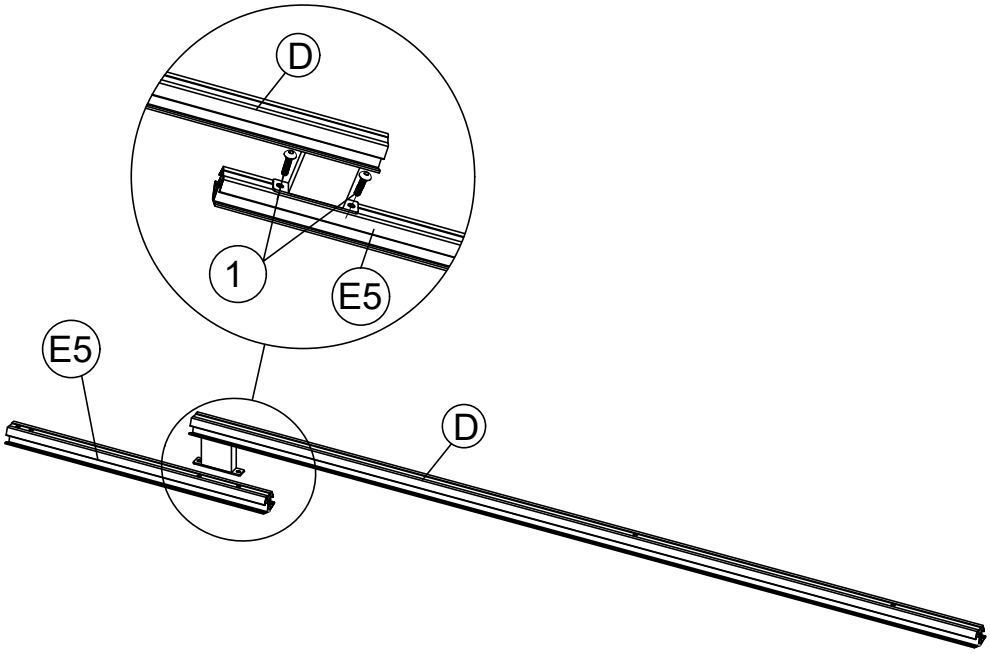

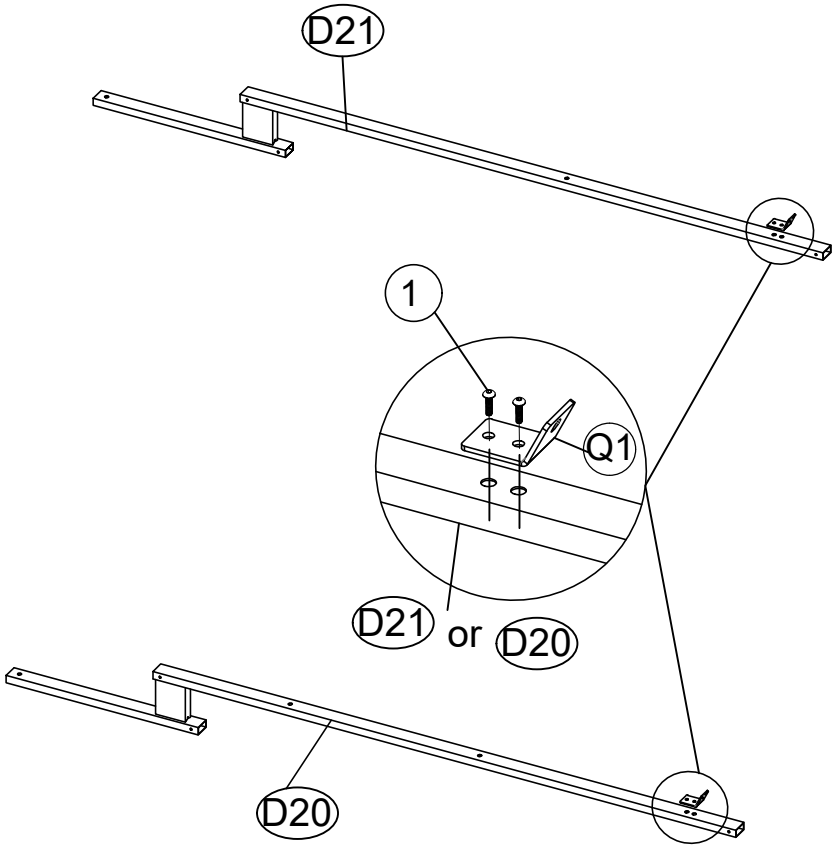

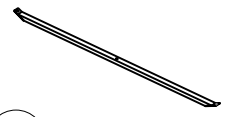

F8 3x

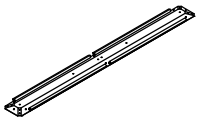

L5A 1x

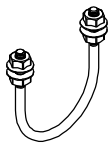

11 1x



M6x15

1 18x

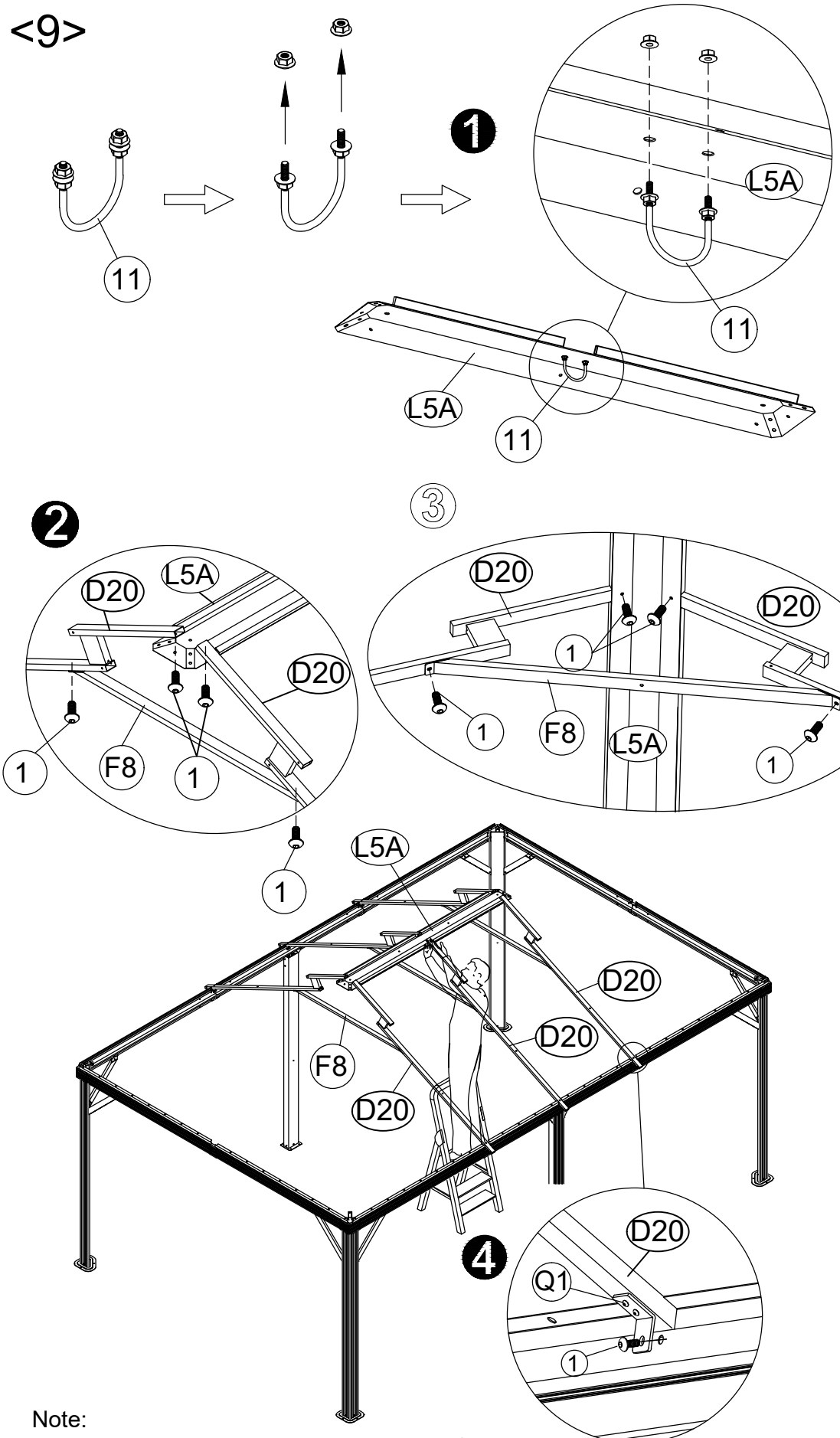

Note:
1. Let one person stand on the ladder to lift "L5A" and hold and let others fasten the screws connecting both ends of "D20" .
2. Please do not let go of holding "L5A" until all the "D20" screws are installed.



5 3x



M6x15

1 16x

<10>

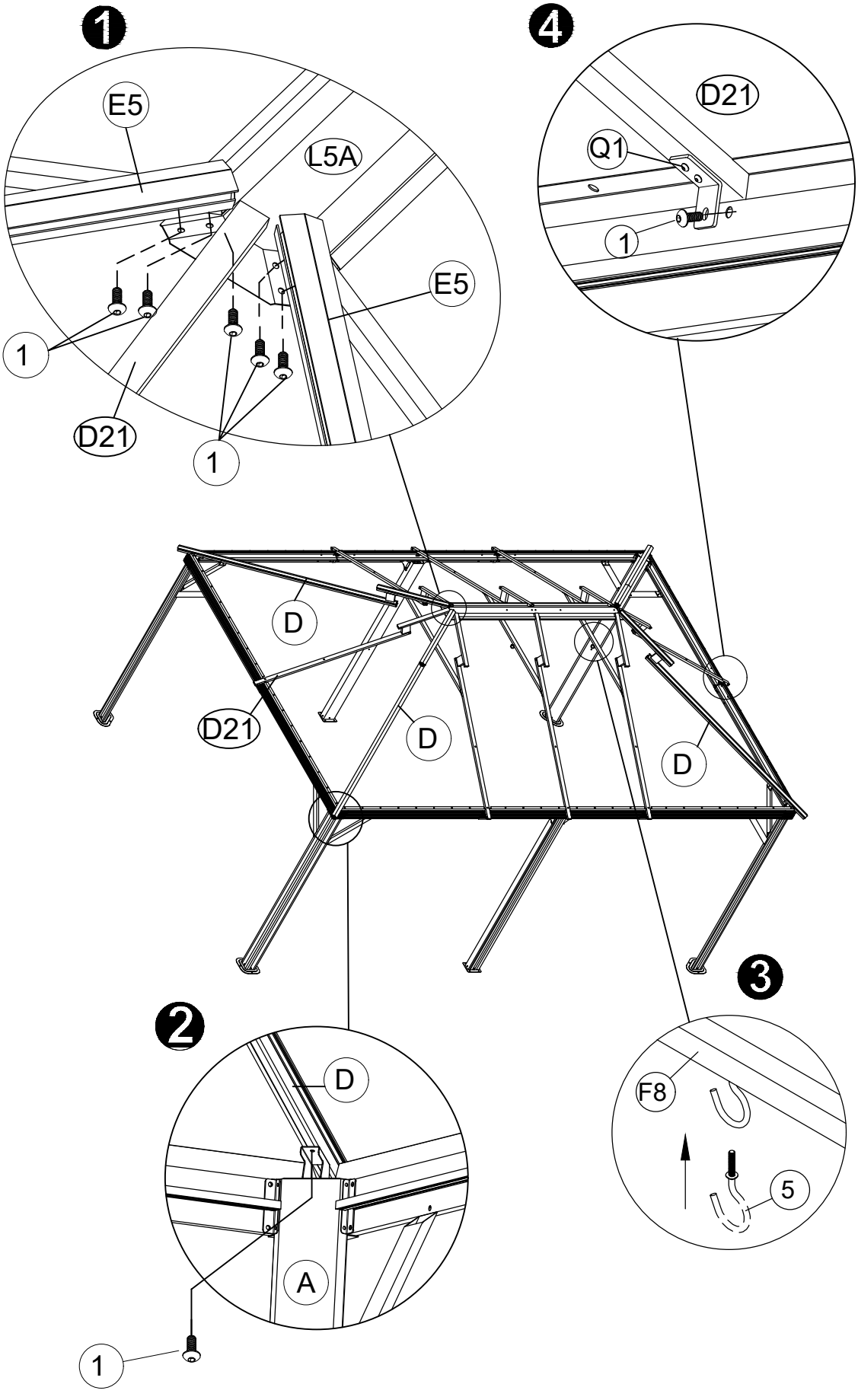



G1 2x

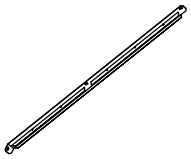

G7 2x

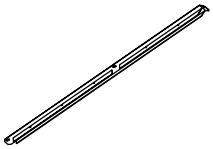

G8 2x



N 4x



N1 2x



M6x15

1 12x

<11>

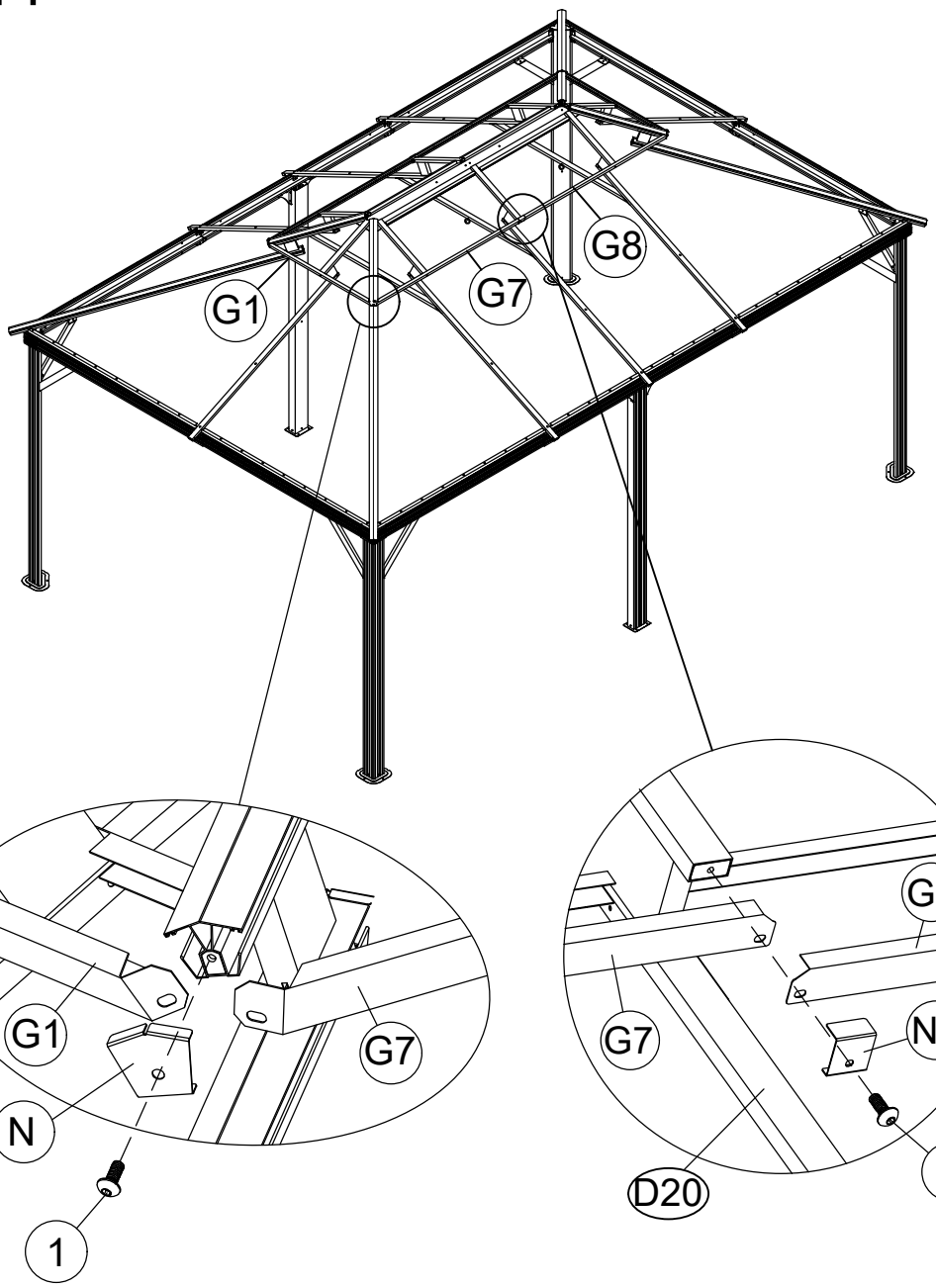

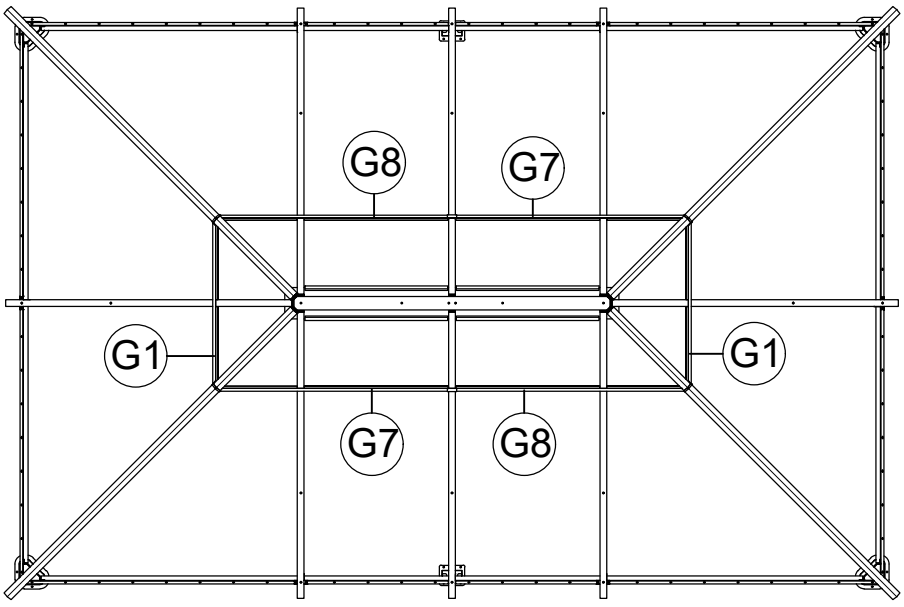

S1 2x S2 2x

X1 2x X2 2x

X3 2x X4 2x

X5 2x X6 2x

Z 32x

Z1 4x

Z2 4x

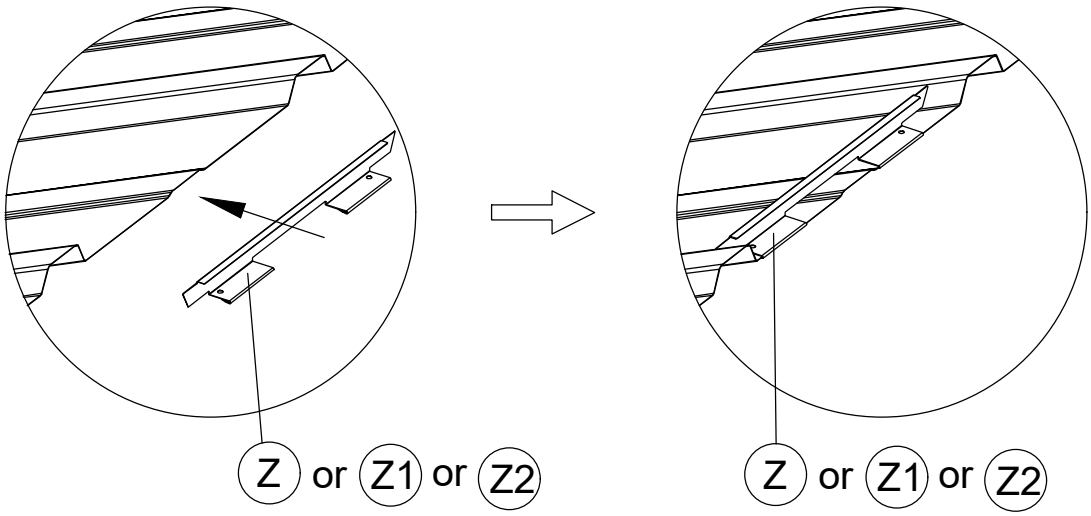

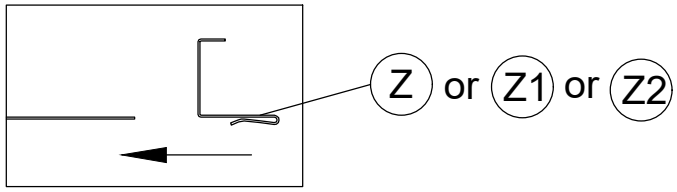

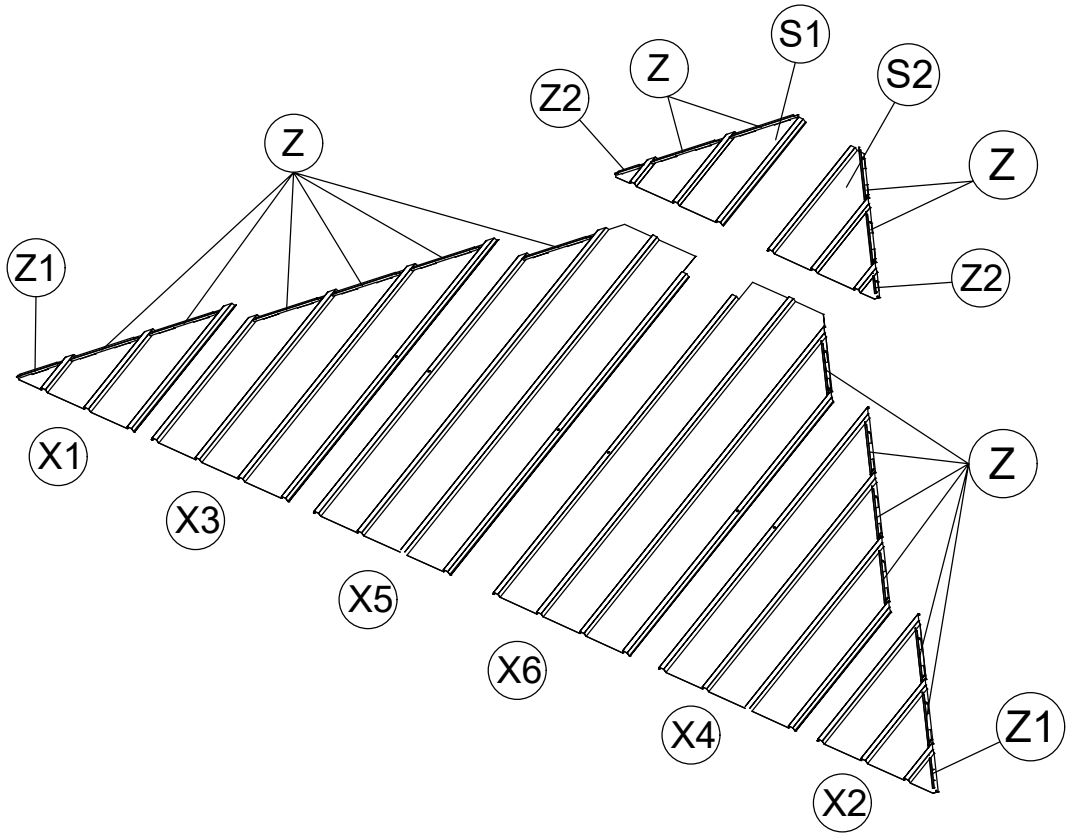

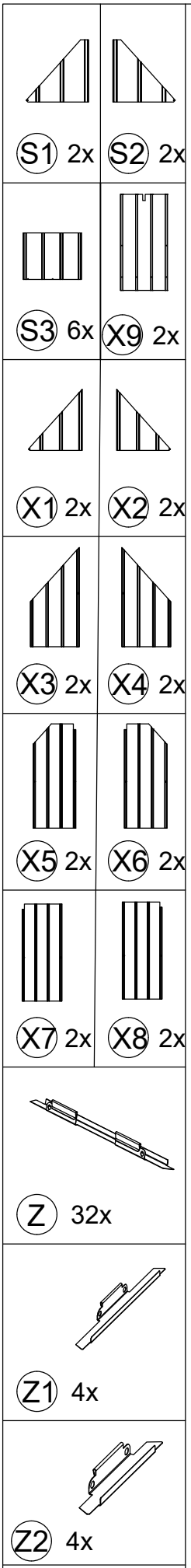
S1 2x
S2 2x
S3 6x
X9 2x
X1 2x
X2 2x
X3 2x
X4 2x
X5 2x
X6 2x
X7 2x
X8 2x
Z 32x
Z1 4x
Z2 4x

<13>

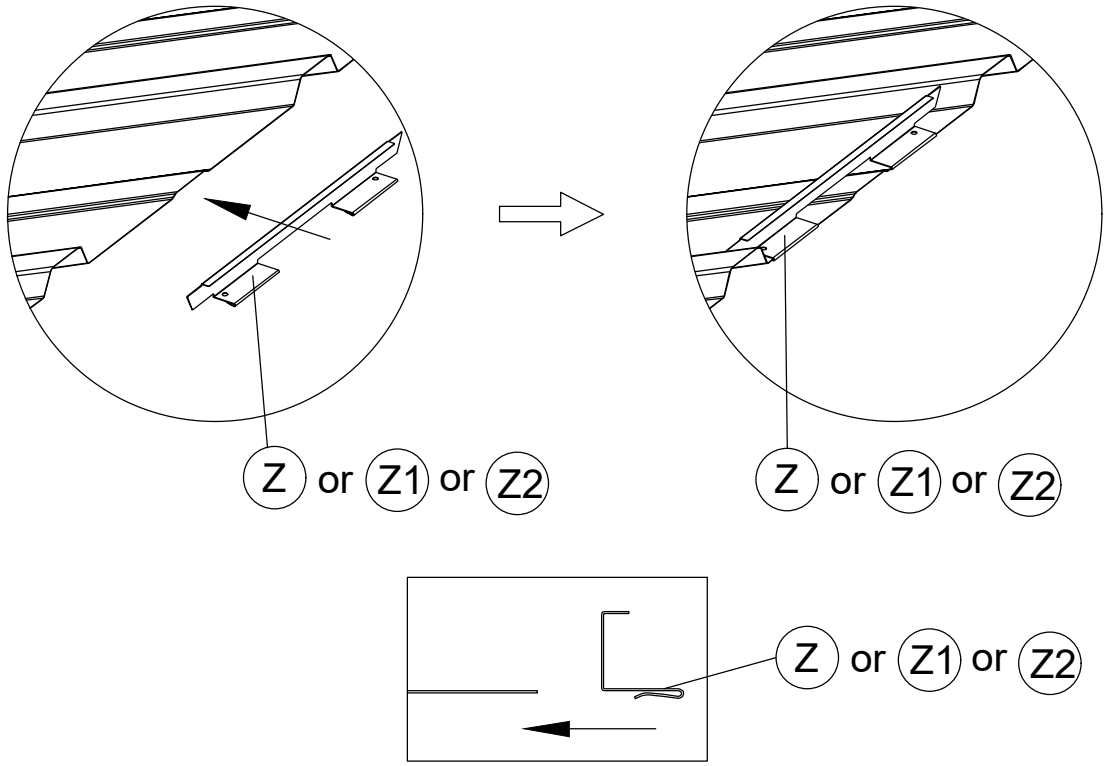
Z or Z1 or Z2
Z or Z1 or Z2
Z or Z1 or Z2

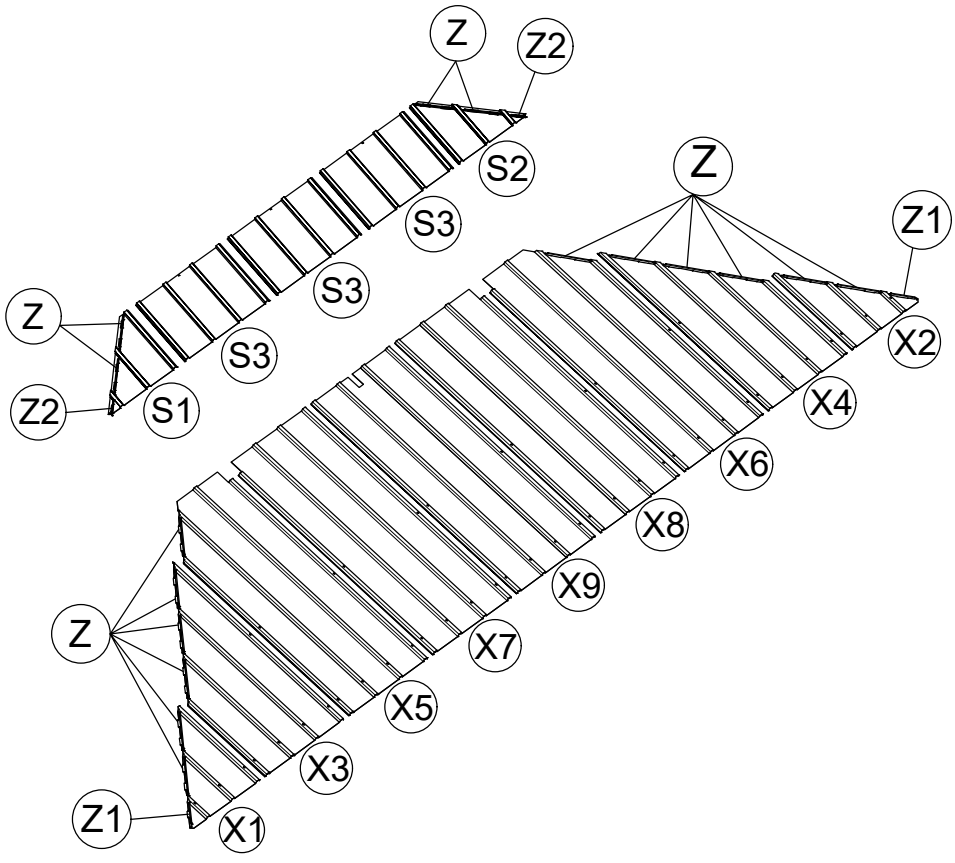
Z
Z2
S2
S3
S3
S3
Z
Z2
S1
Z
Z1
X2
X4
X6
X8
X9
X7
X5
X3
X1
Z
Z1

<14>

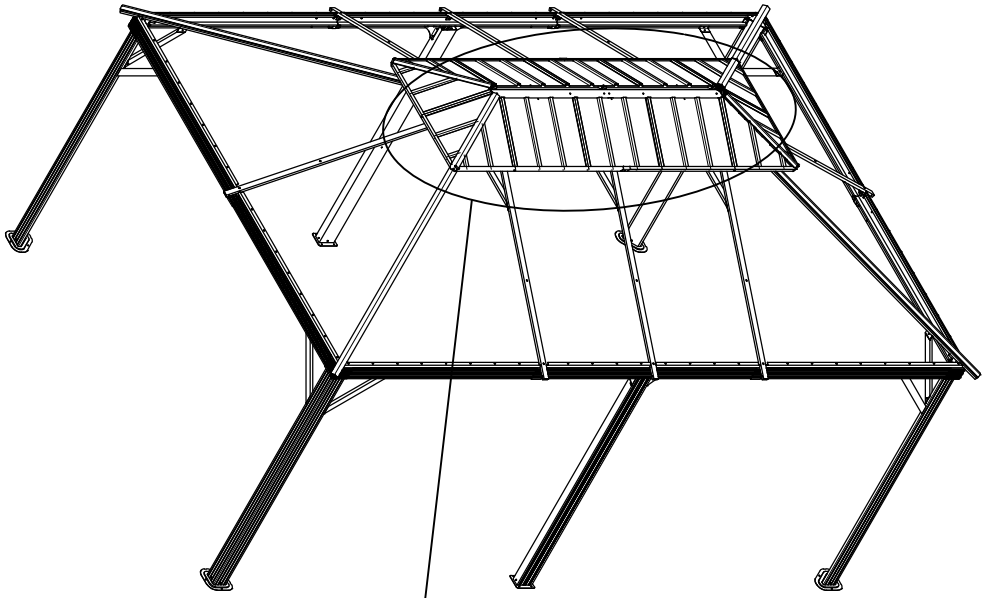

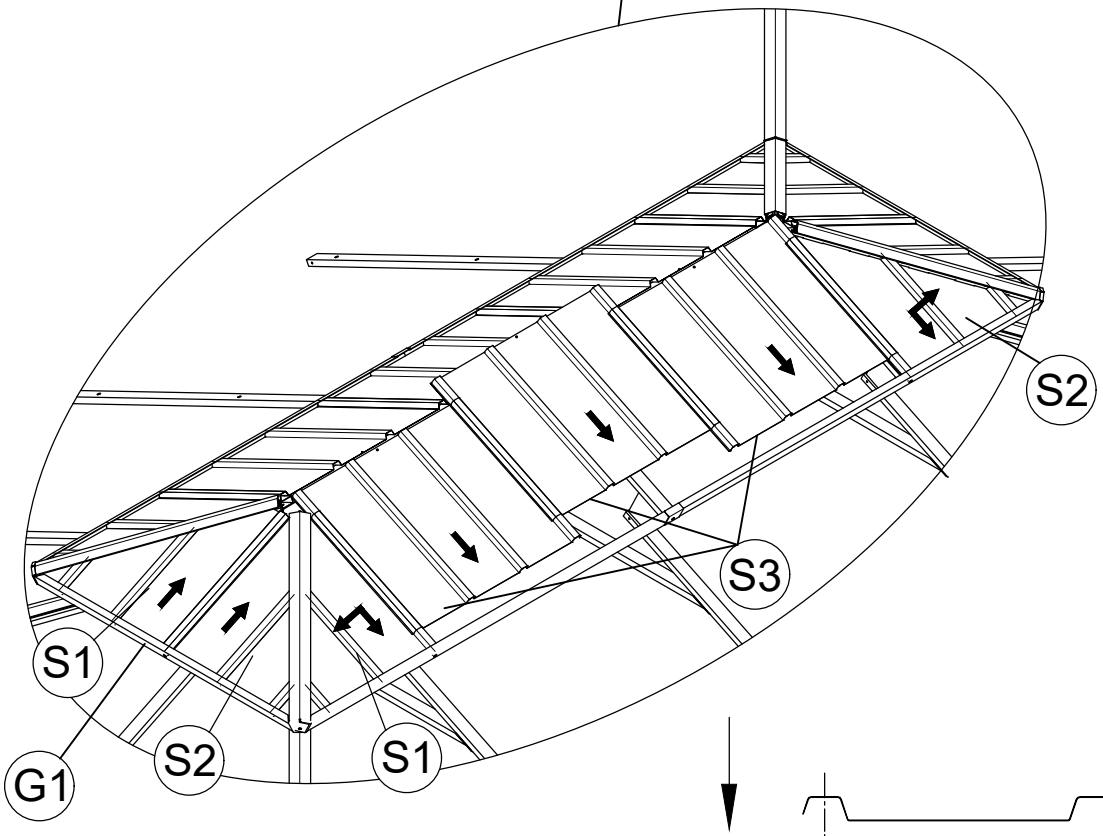

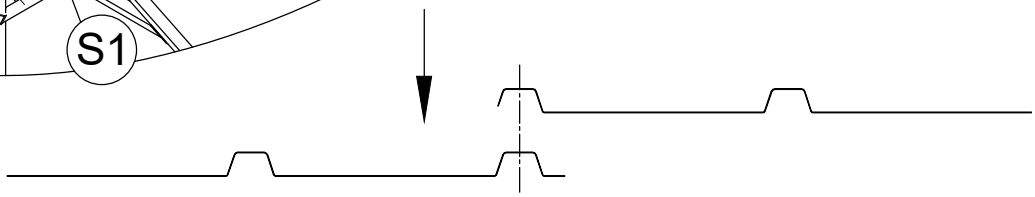

When installing the Roof plates (S2) onto short side, pls detach the right end of Roof Rib(G1) first. And then install the right end of Roof Rib (G1) again after S2 is installed.

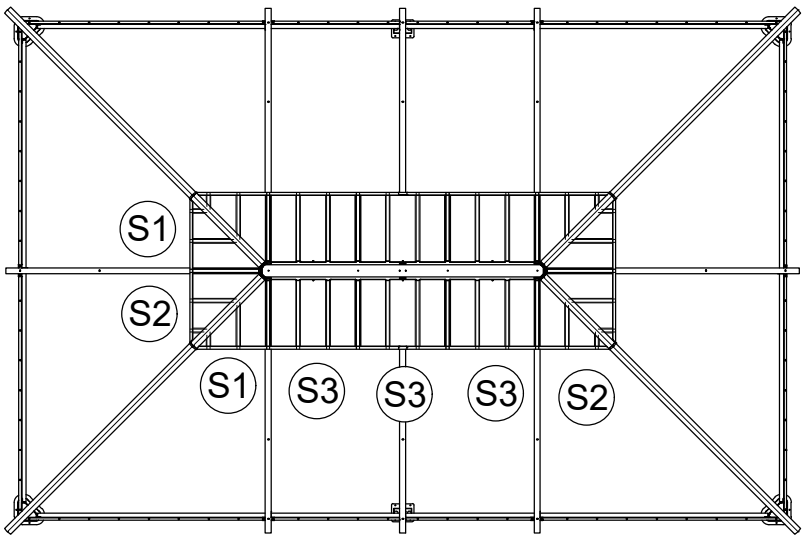

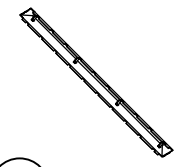

M5 1x



M6x15

① 4x

<15>

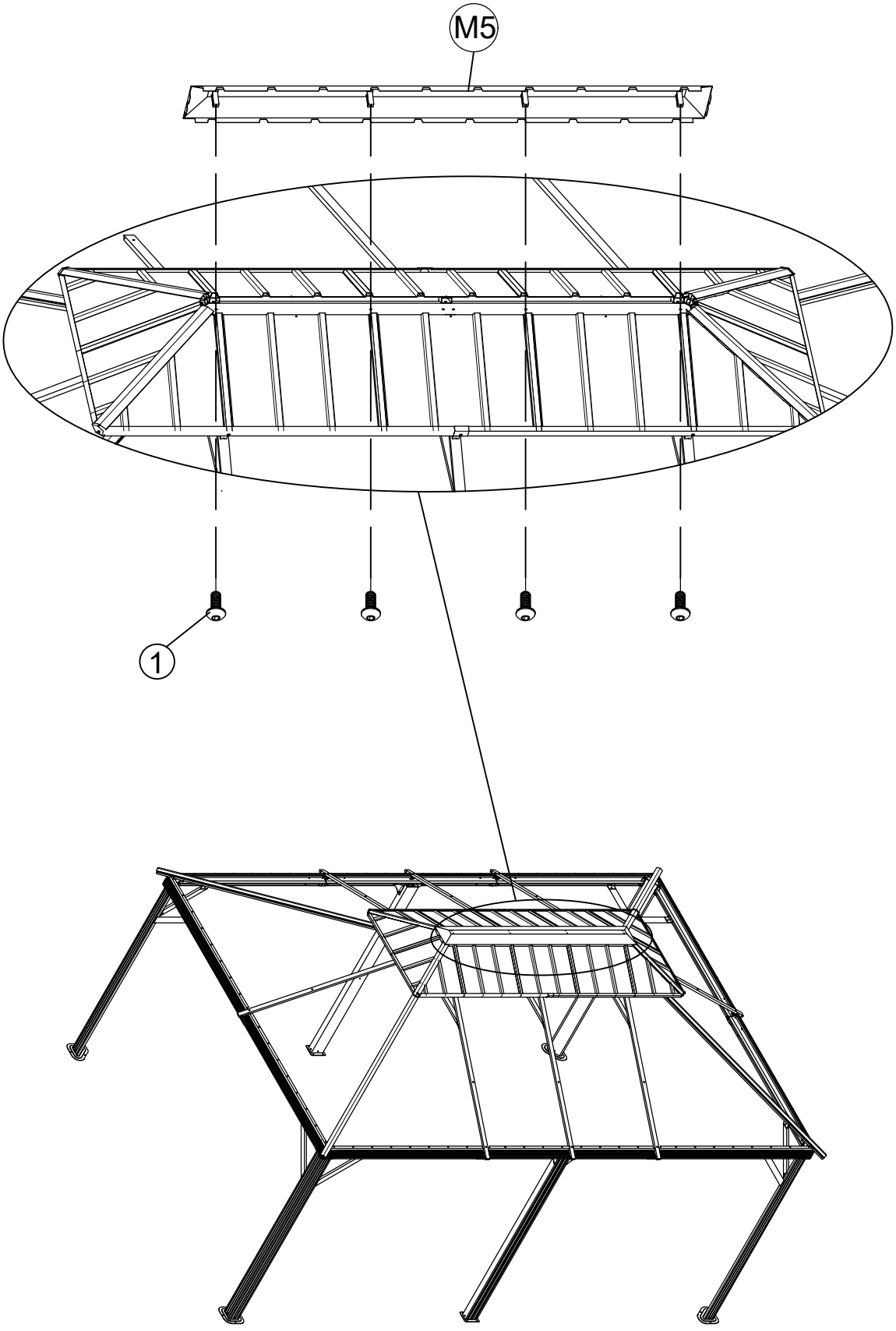

<16>

F1 4x

F2 4x

F5 4x

M6x15

1 12x

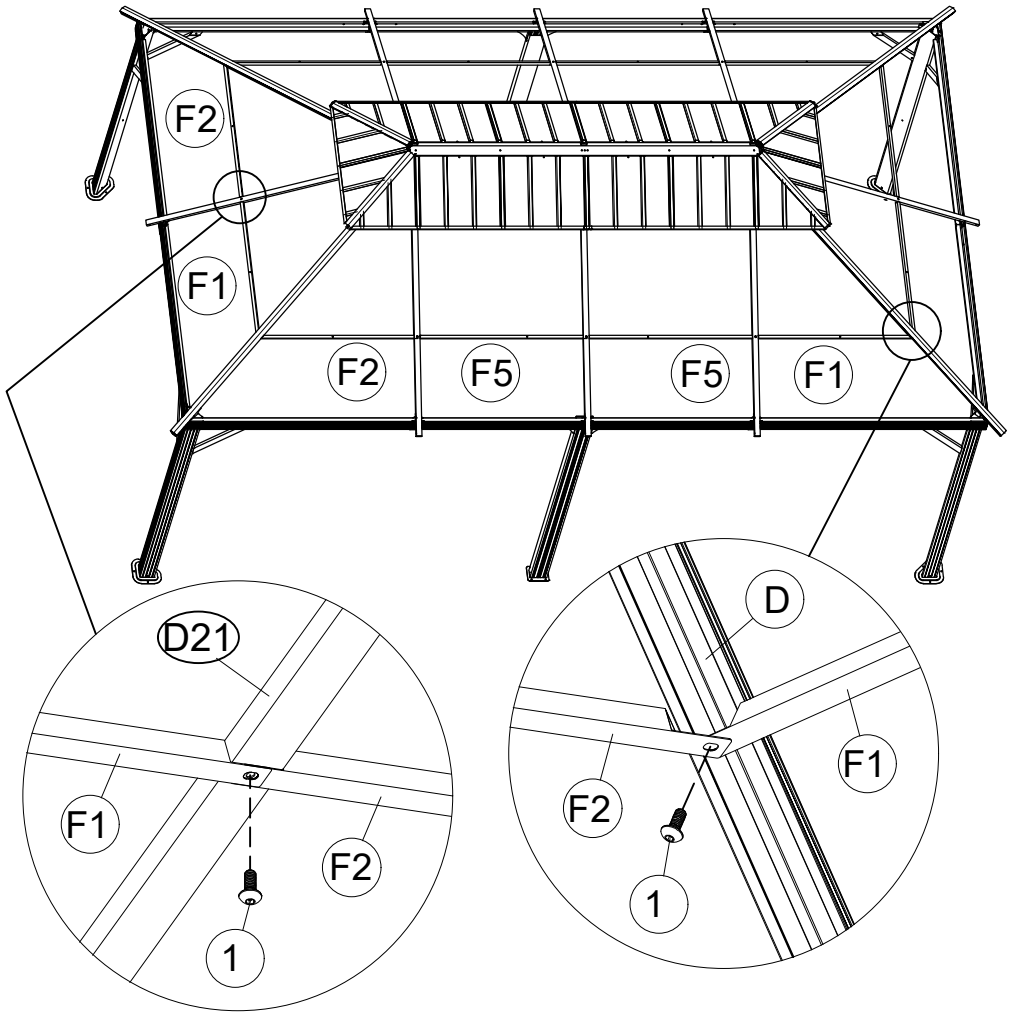

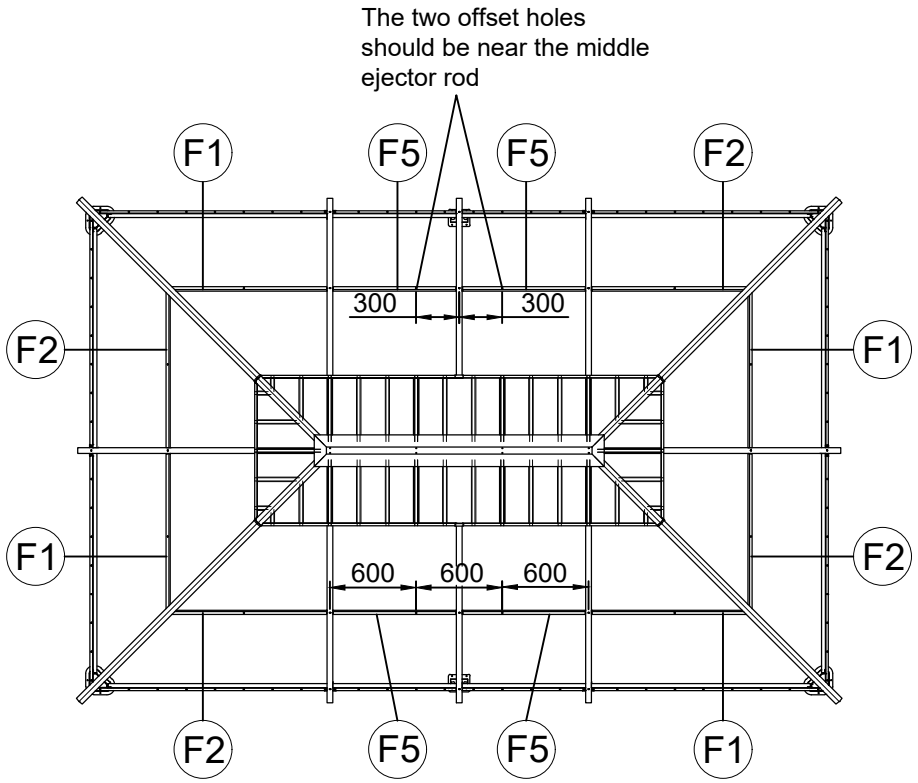

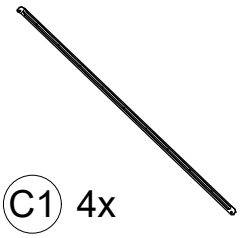

C1 4x



C2 4x

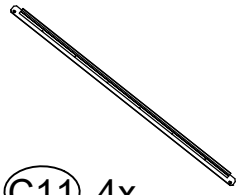

C11 4x



N 4x



N1 8x



M6x15

1 12x

21

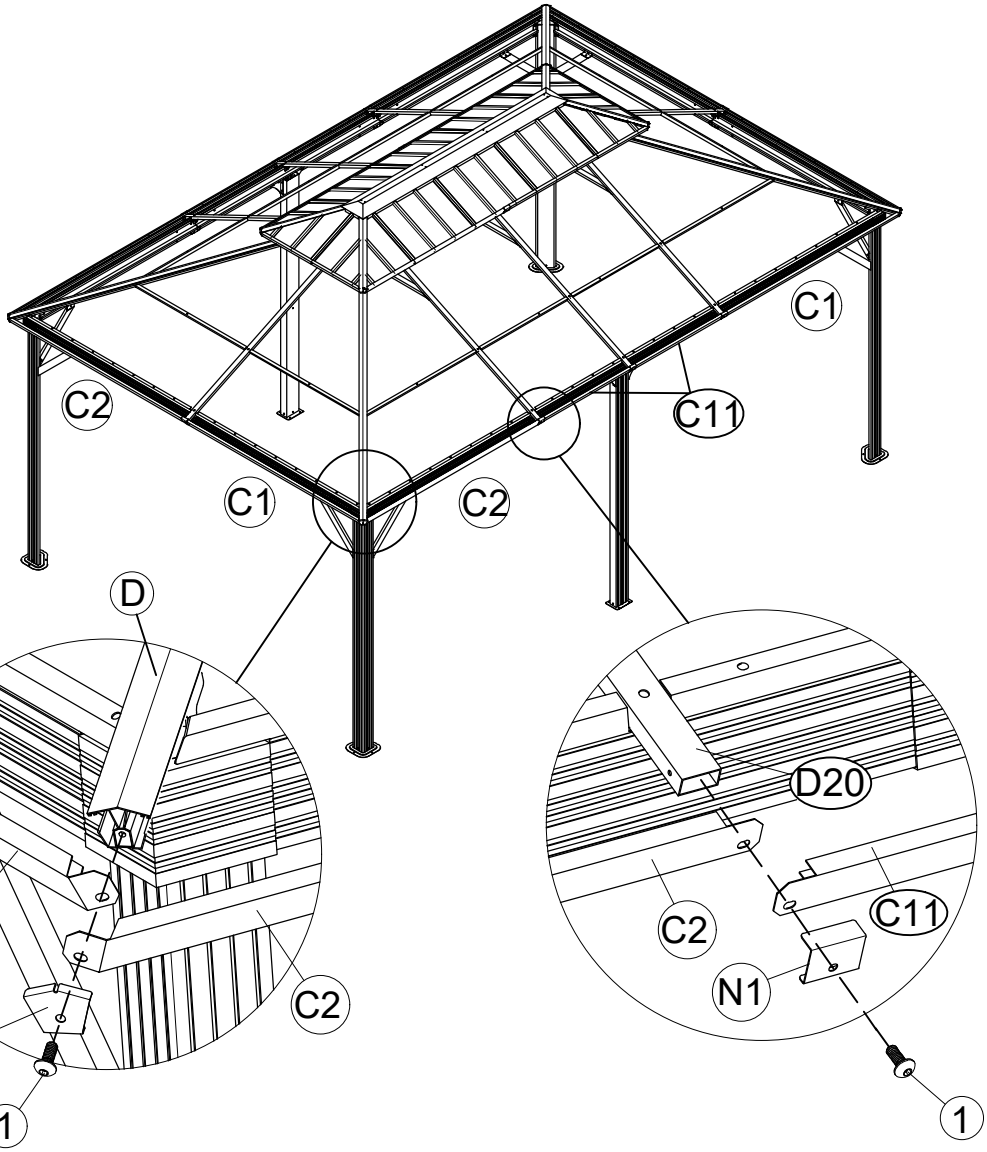

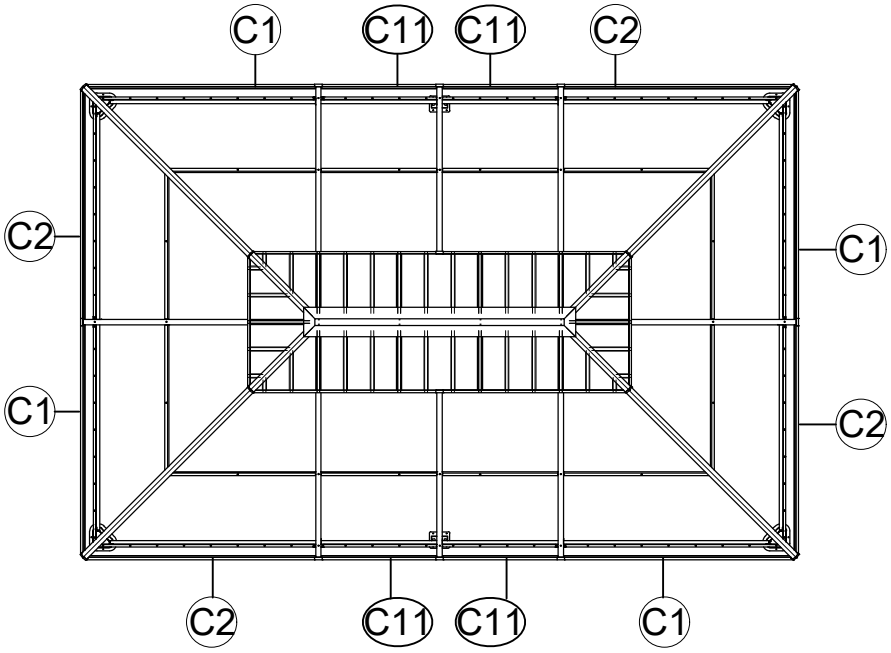

<18>

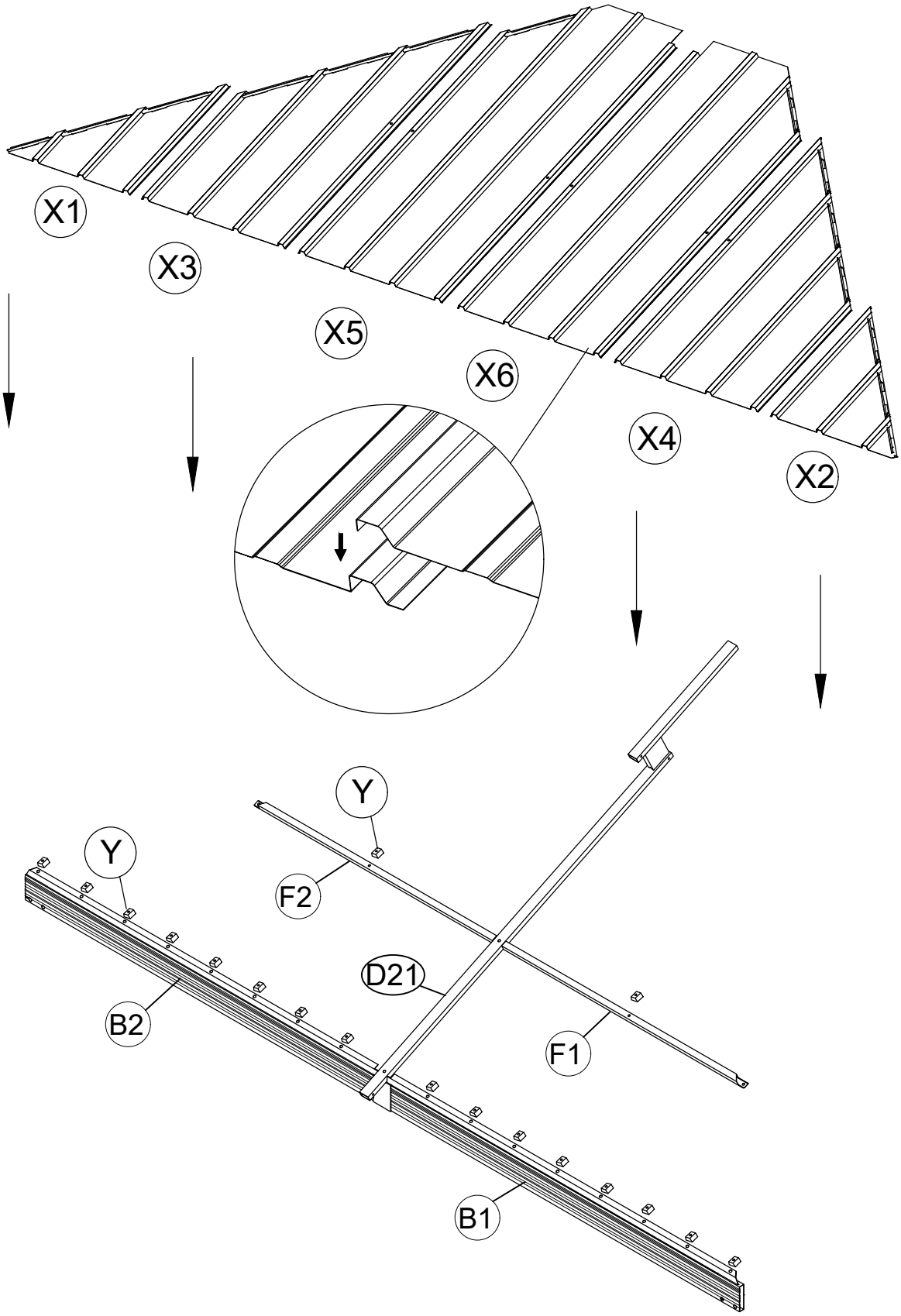

<19>

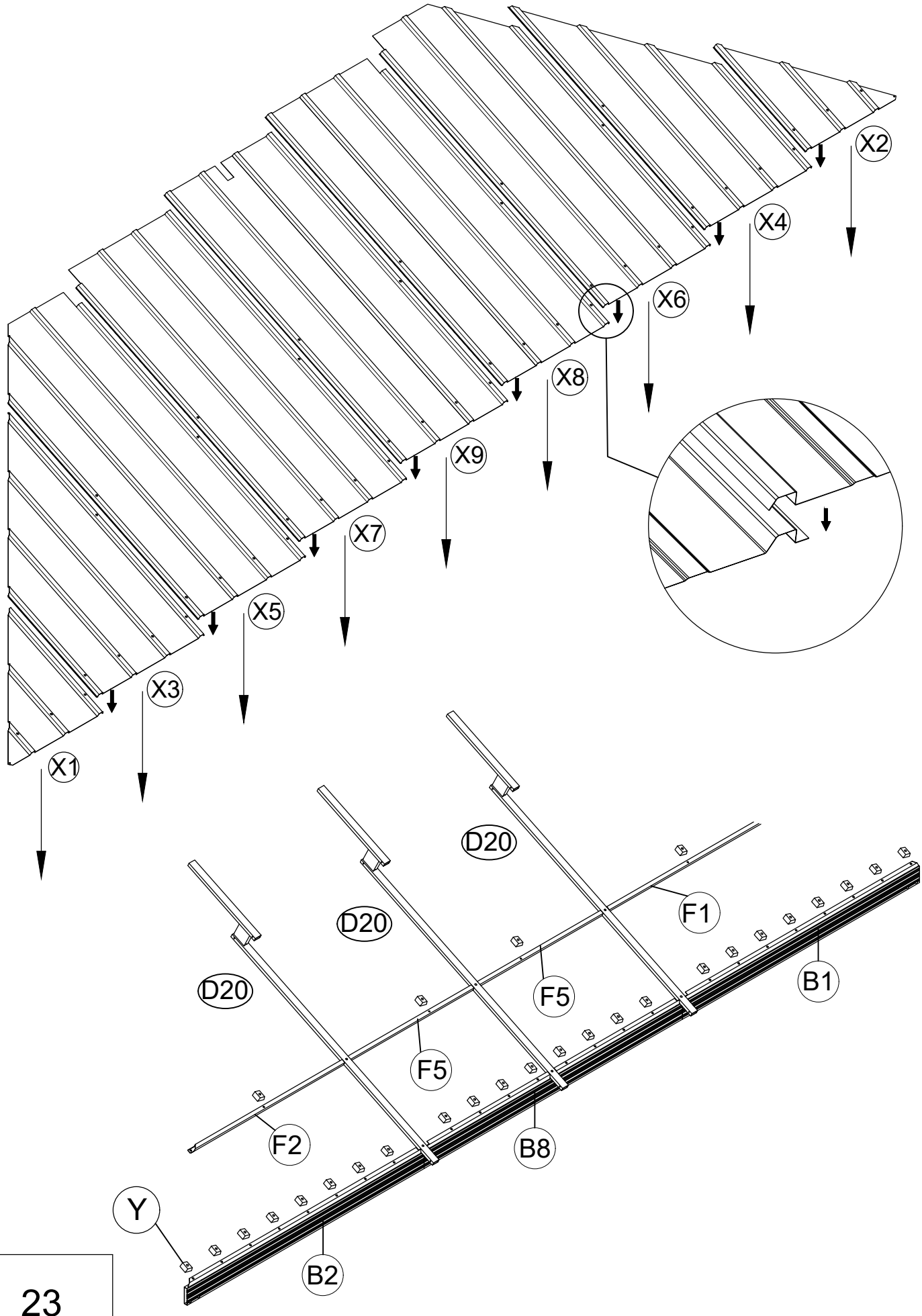

<20>

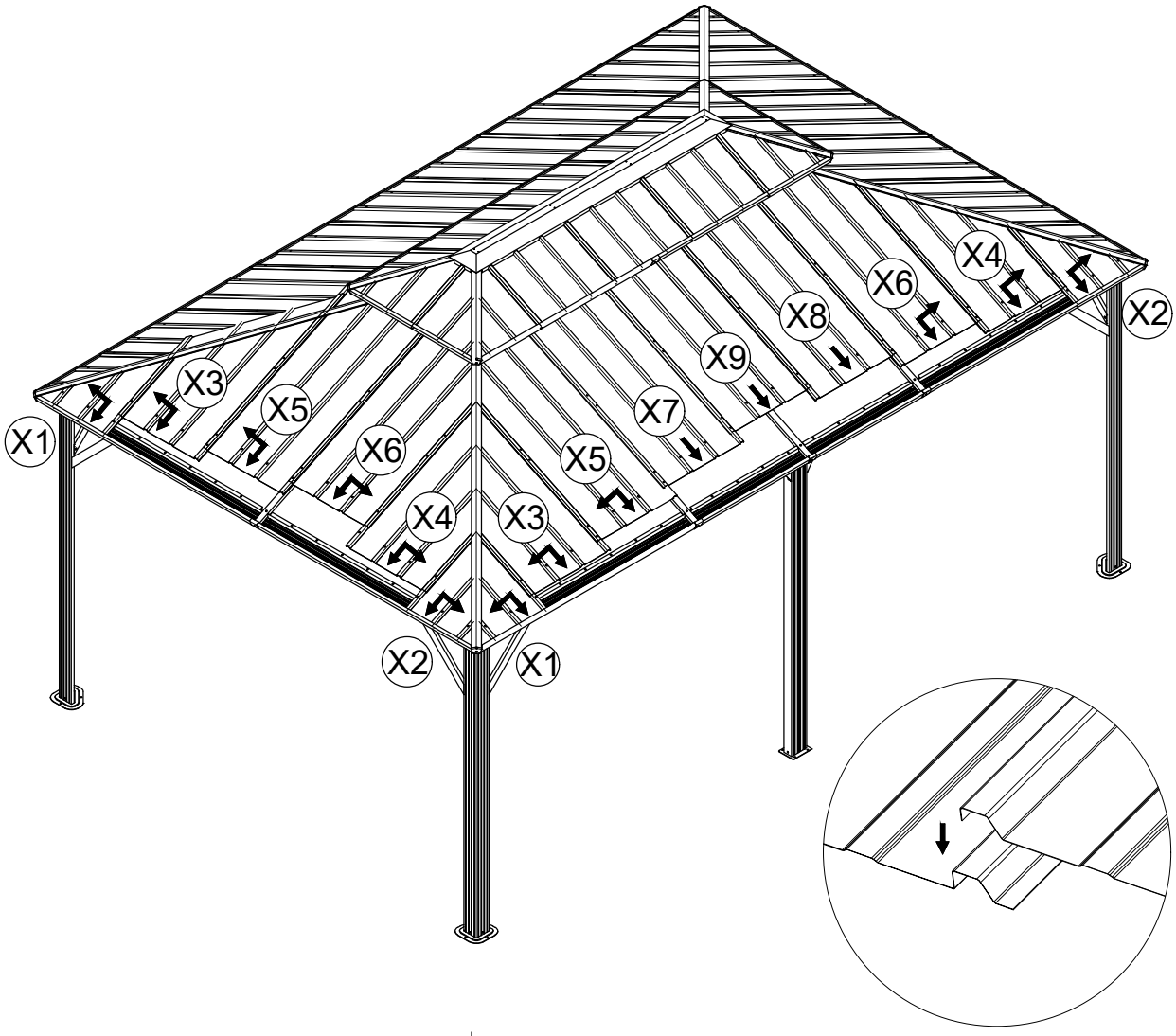
X1
X3
X5
X6
X4
X2
X7
X9
X8
X6
X4
X2
X5
X3
X2
X1

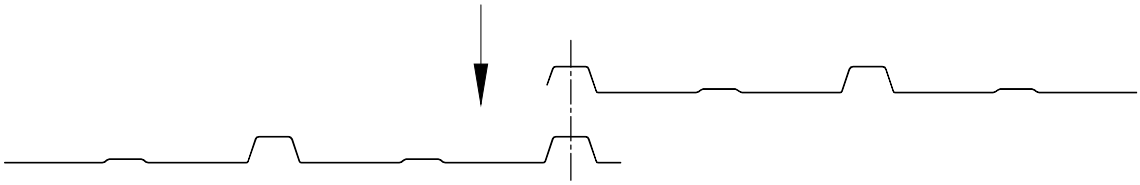

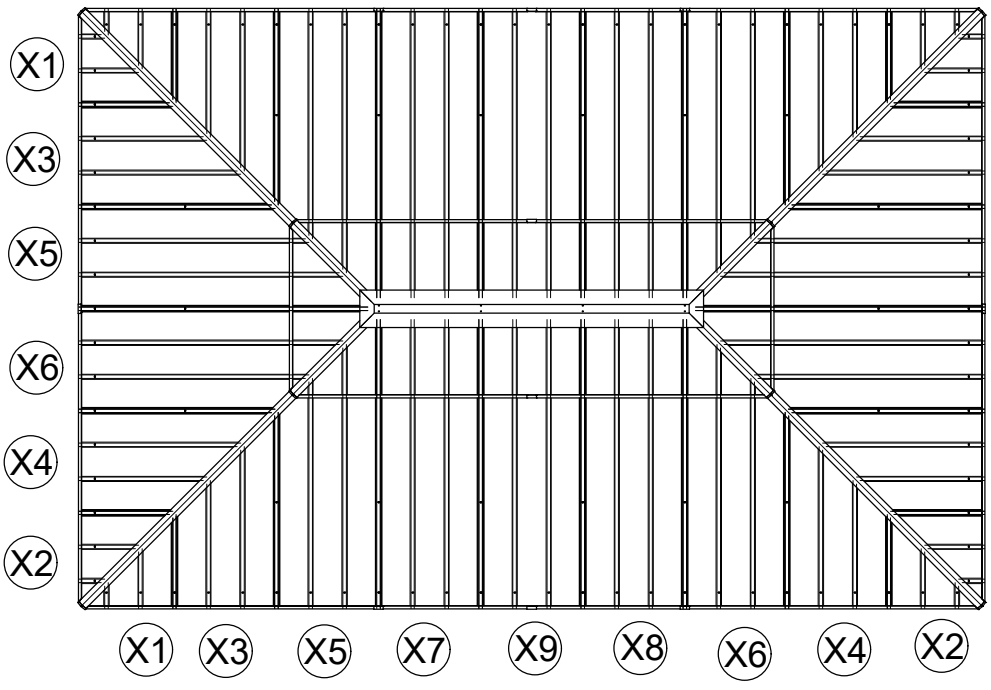
X1
X3
X5
X6
X4
X2
X1
X3
X5
X7
X9
X8
X6
X4
X2



Y 92x

M6x25

3 12x



M6x23

2 80x



M6x45

7 12x

<21>

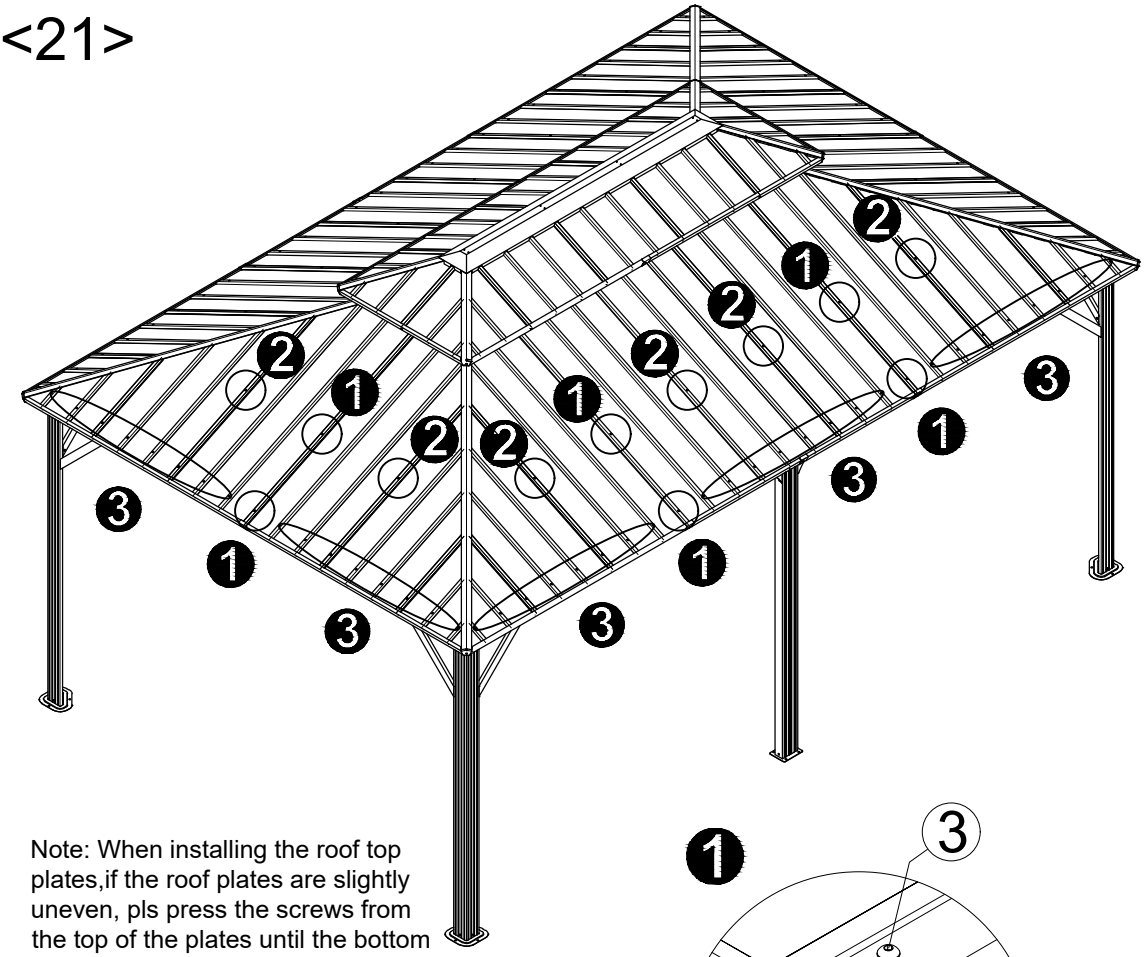

Note: When installing the roof top plates,if the roof plates are slightly uneven, pls press the screws from the top of the plates until the bottom screw thread is exposed by 3 to 4mm, and then screw on the nut.

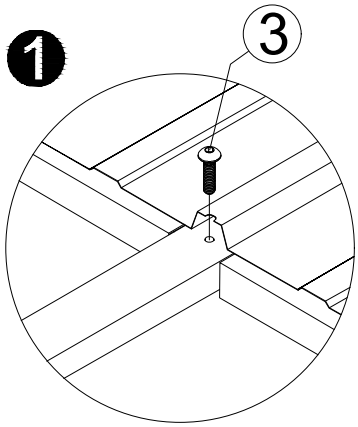

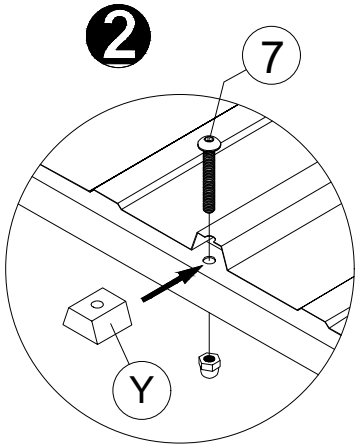

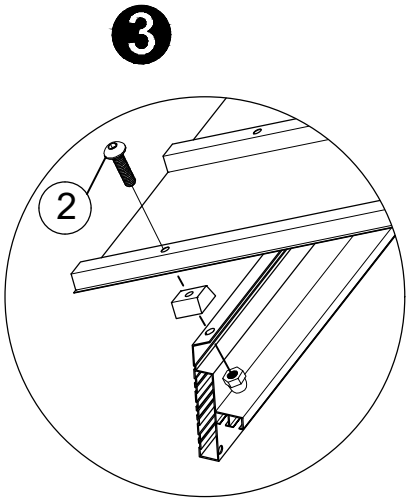

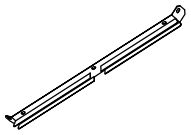

I1 2x

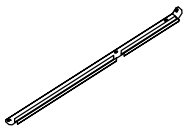

I7 2x

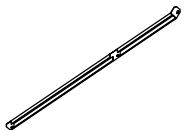

I8 2x

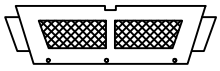

V1 2x

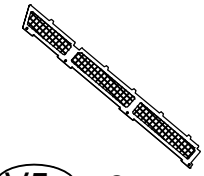

V5a 2x

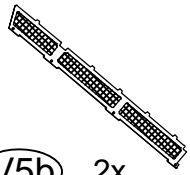

V5b 2x



N 4x



M6x15

1 12x



9 12x M6x10

<22>

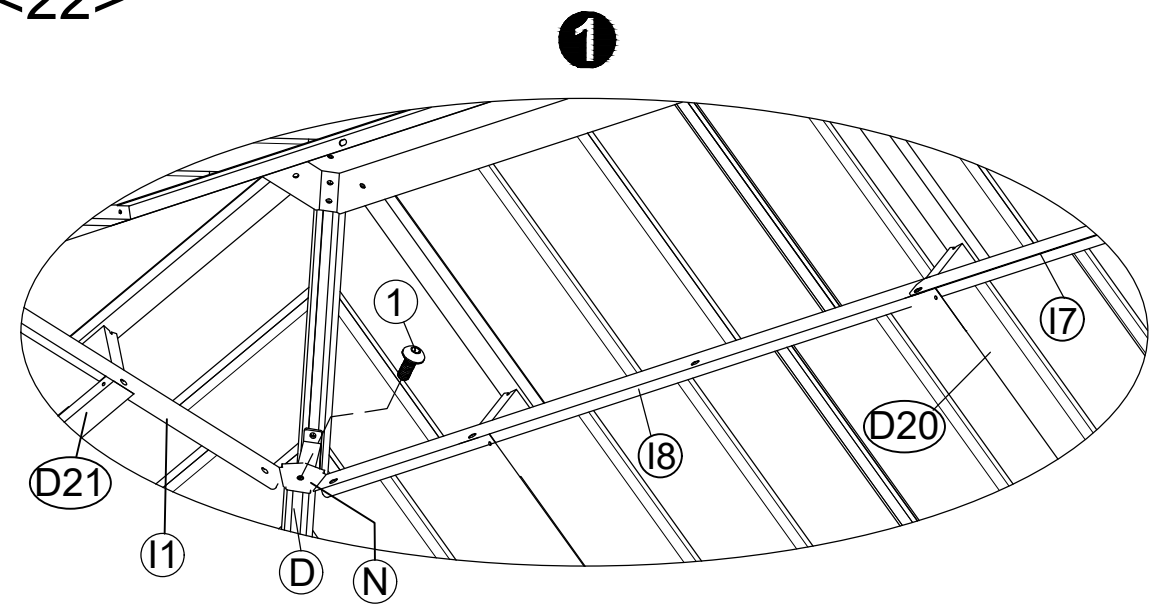

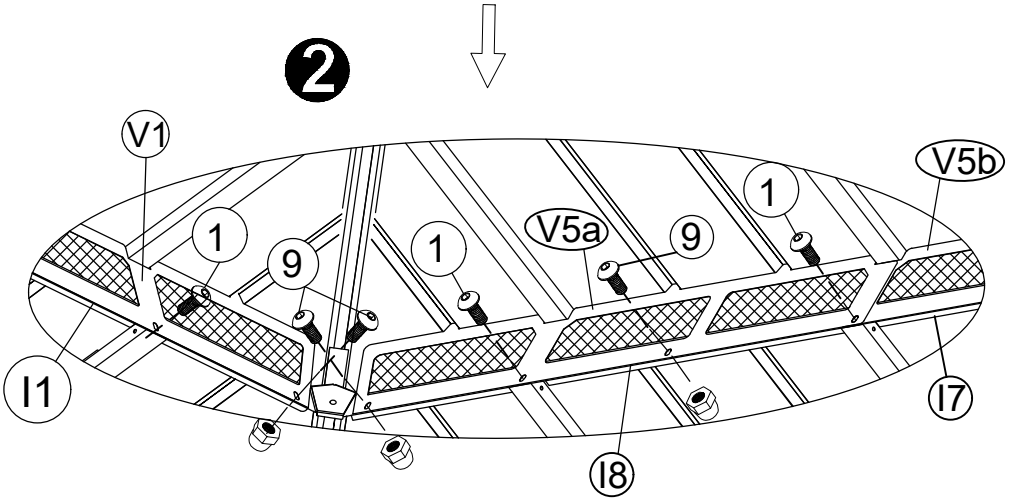

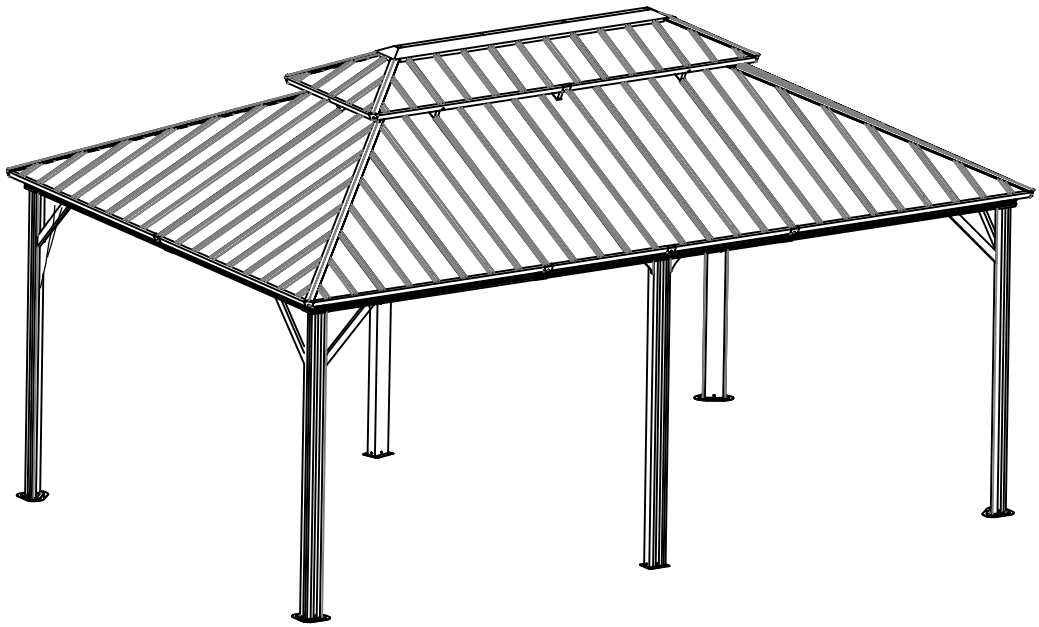

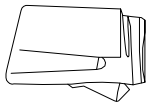

T 4x + 2x

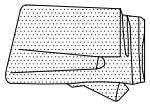

T1 4x + 2x

<23>

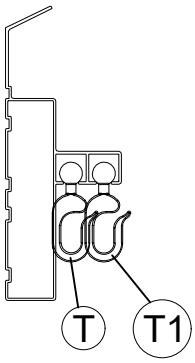

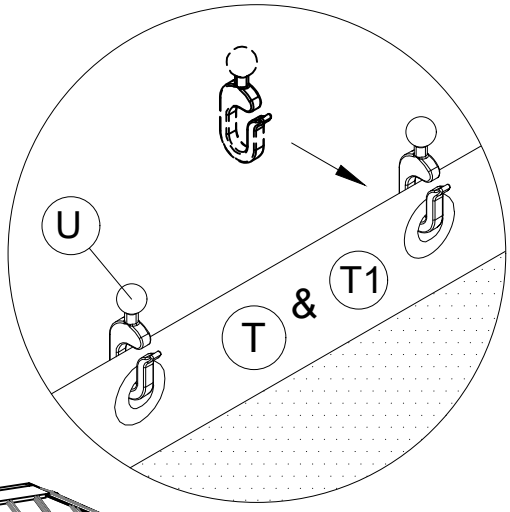

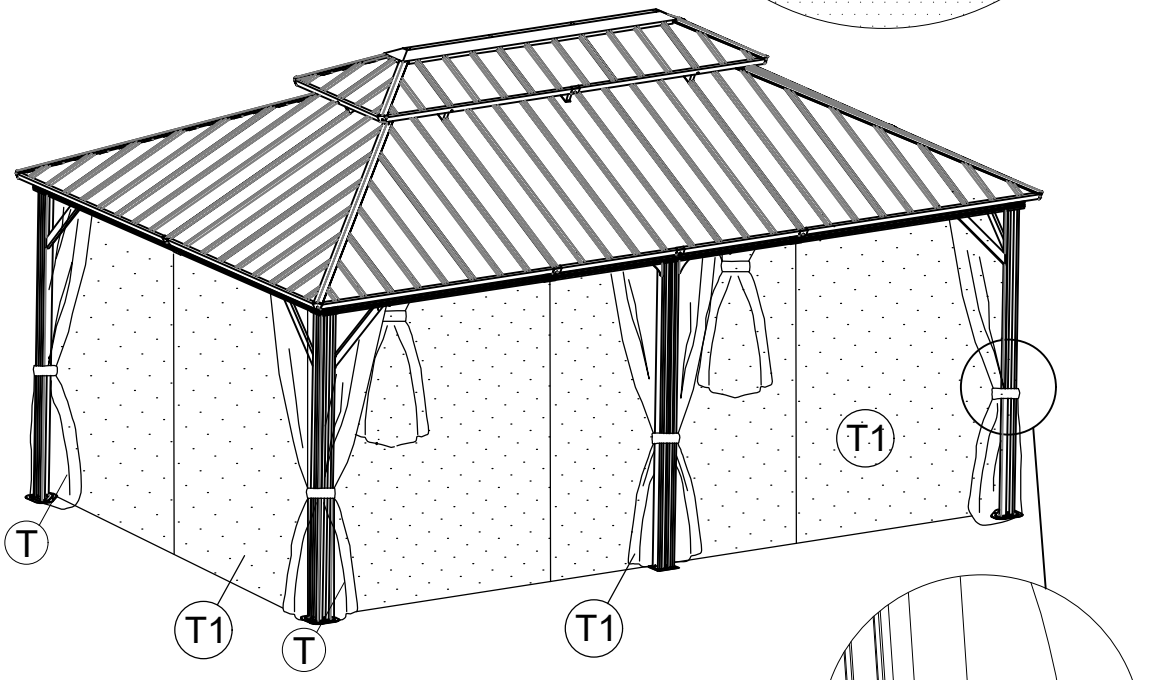

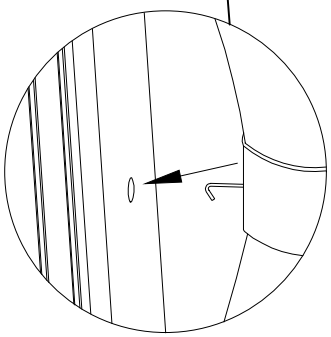

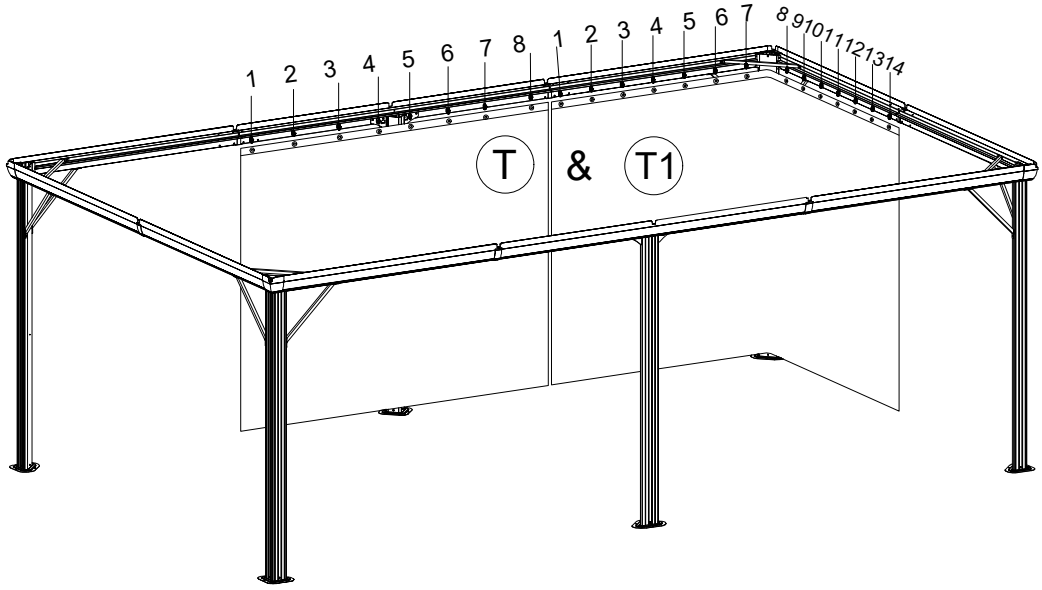

Carton-1/6	
Part	Qty
A	4
A2	2
Carton-2/6	
Part	Qty
D	4
D21	2
D20	6
E5	4
C1	4
C2	4
C11	4
G1	2
G7	2
G8	2
I1	2
I7	2
I8	2
Z	64
Z1	8
Z2	8
P	6
J	4

Carton-3/6	
Part	Qty
B1	4
B2	4
V1	2
V5a	2
V5b	2
Carton-4/6	
Part	Qty
L5A	1
M5	1
B8	2
F1	4
F2	4
F5	4
F8	3
H	4
H1	4
Q1	8
N	12
N1	10
K1	6
K	4
J1	2
W1	2
W2	2
V	6
Y	92

Carton-4/6	
Part	Qty
U	144
Q3	8
Q4	8
T	4+2
T1	4+2
1.2.3.4.5.7.8.9. 10.11.12.14.15	1
Carton-5/6	
Part	Qty
X5	4
X6	4
X7	2
X8	2
X9	2
Carton-6/6	
Part	Qty
X1	4
X2	4
X3	4
X4	4
S1	4
S2	4
S3	6