PREMIER
COPPER PRODUCTS

MODEL NUMBER: HV-CORREA36-C2036BP

* Description: 36 Inch 735 CFM Hand Hammered Copper Wall-Mounted Correa Range Hood with Screen Filters
* Outer Dimensions: 36" X 24" X 36"
* Top Dimensions: 22" X 12"
* Bottom Dimensions: 36" X 24"
* Skirt Height: 9"
* Finish: Oil Rubbed Bronze

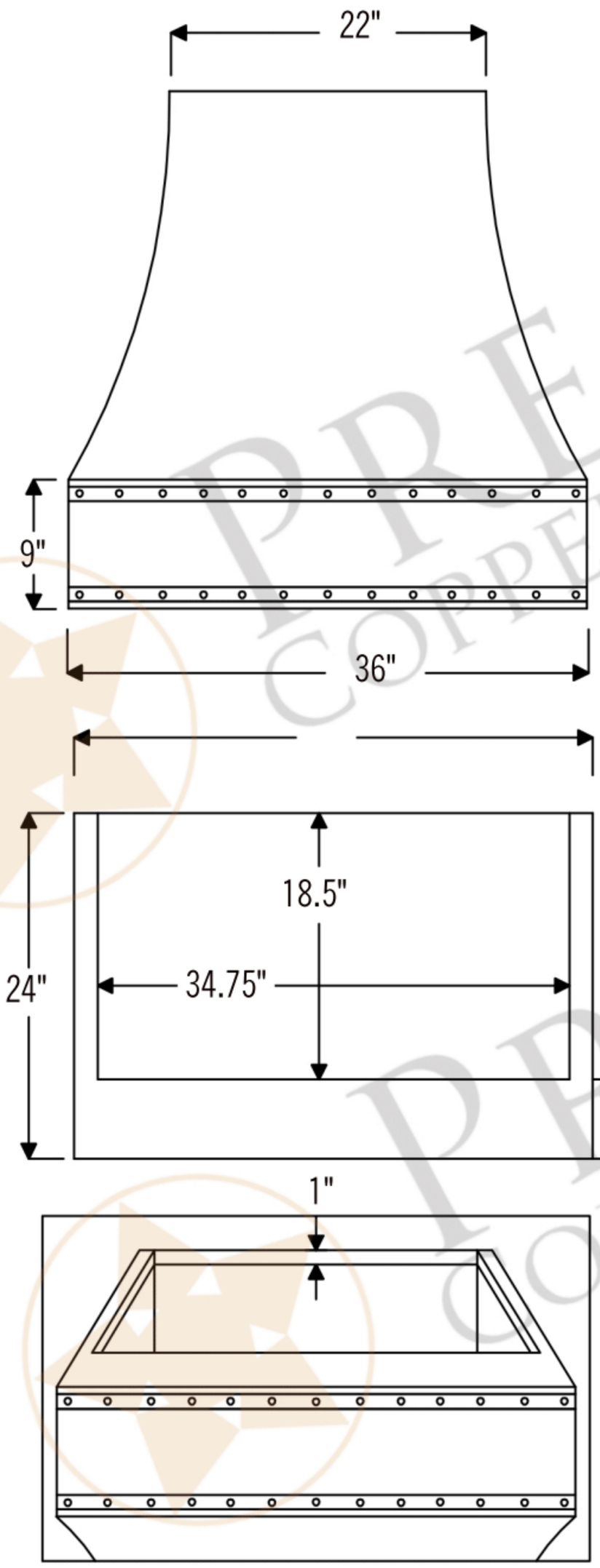

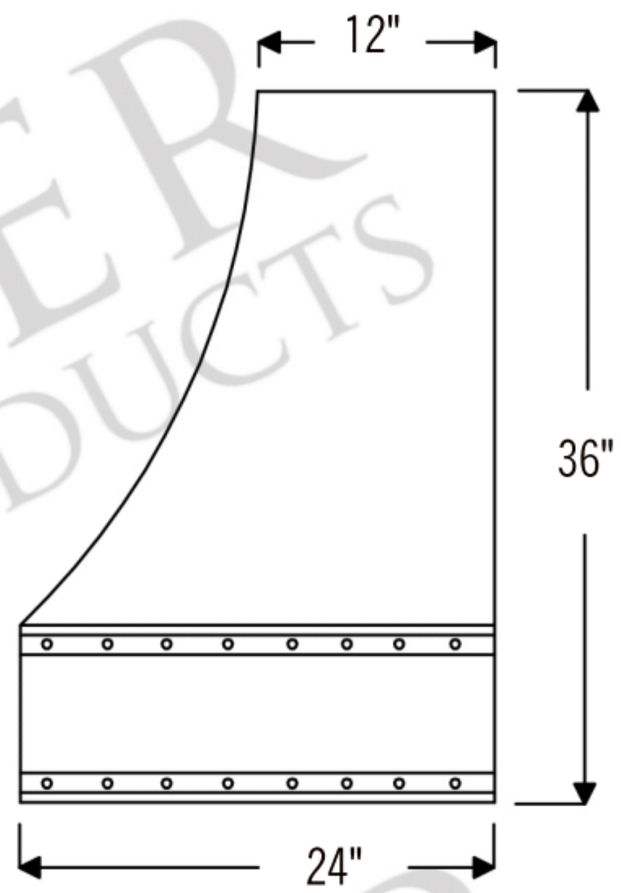

THIS PRODUCTS IS HAND CRAFTED, SMALL VARIANCES IN COLOR AND SIZE MAY OCCUR.
DO NOT MAKE ANY INSTALLATION CUTS UNTIL YOU RECEIVE YOUR ITEM(S).