Installation & Assembly

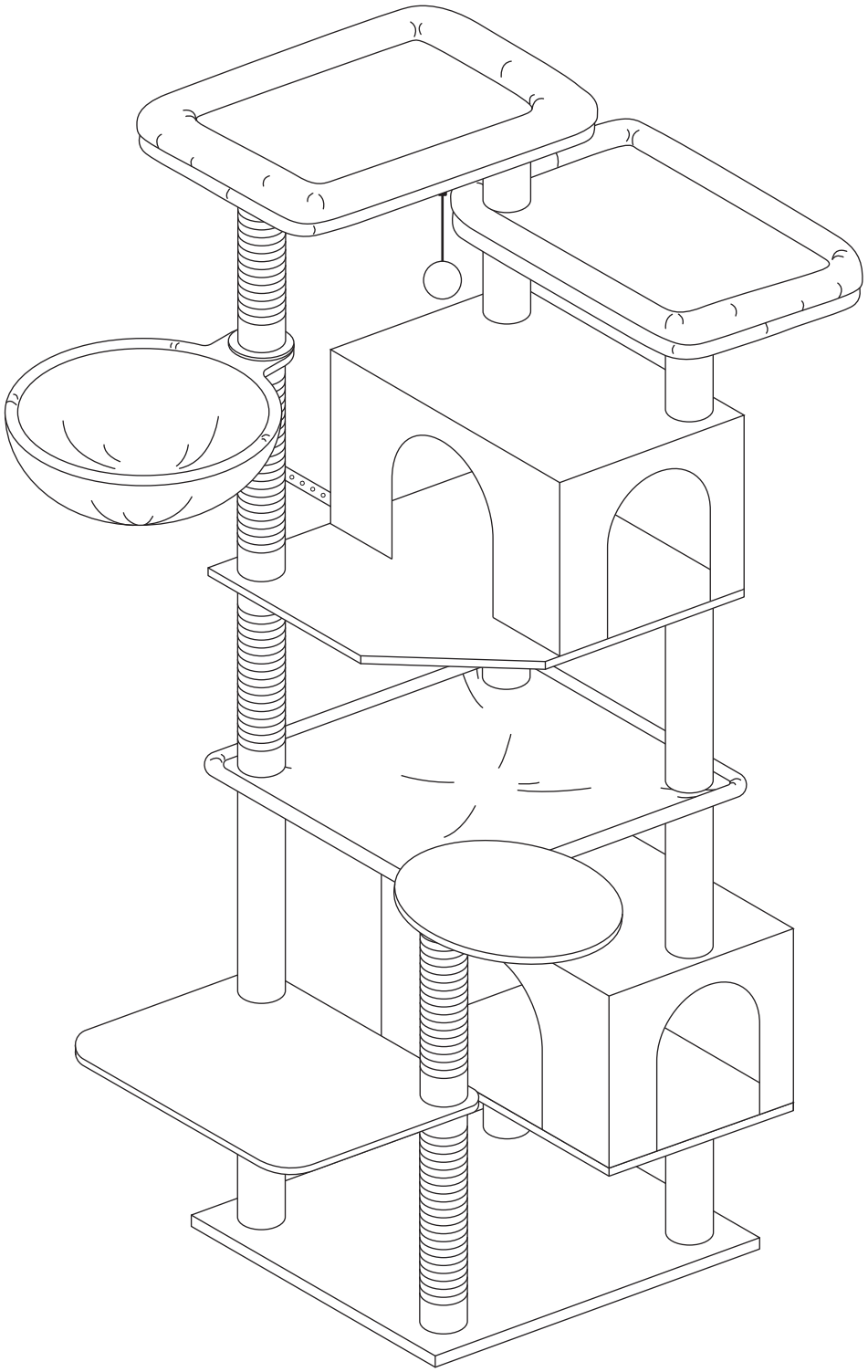

- We are committed to delivering customer-driven products that live up to your high standards.
- We encourage you to write a review sharing your experiences with the product.



W1 : 8x35mm(31pcs)



W2 : 8x40mm(1pc)



W3 : 8x80mm(8pcs)



5mm(1pc)



N1(1pc)



N2(1pc)



N3(1pc)

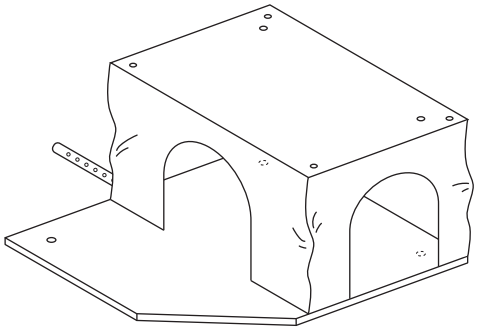

A 480*400*12mm(1pc)

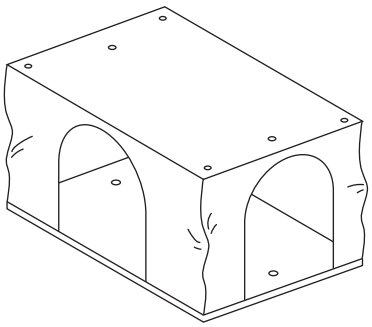

B 400*300*12mm(1pc)

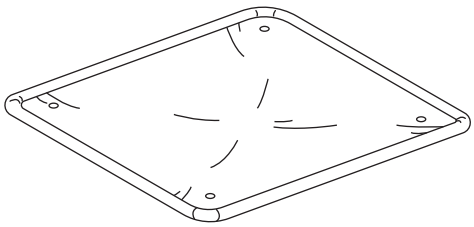

C 470*390mm(1pc)

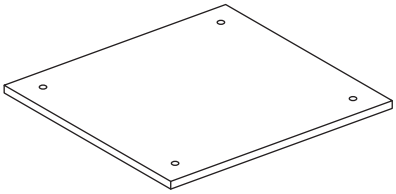

D 540*440*12mm(1pc)

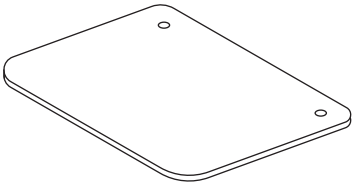

E 400*260*12mm(1pc)

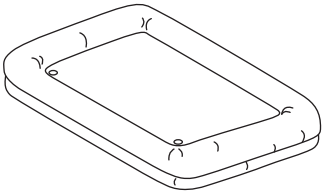

F 400*260*12mm(1pc)

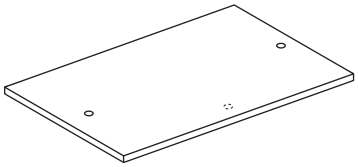

G 480*240*12mm(1pc)

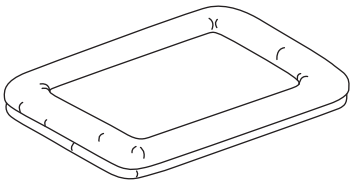

H (1pc)

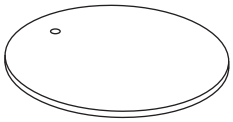

I 240*200*12mm(1pc)

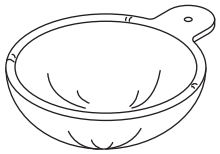

J Φ350mm(1pc)



K Φ70*2.5mm(1pc)

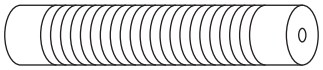

L 350*53.5mm(3pcs)

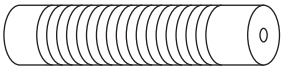

M 300*53.5mm(1pc)

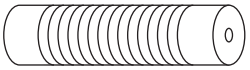

N 250*53.5mm(1pc)



O 350*53.5mm(2pcs)



P 300*53.5(2pcs)



Q 270*53.5mm(2pcs)



R 195*53.5mm(1pc)

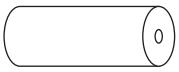

S 170*53.5mm(2pcs)

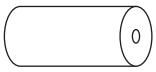

T 140*53.5mm(2pcs)



U 245*25mm(8pcs)

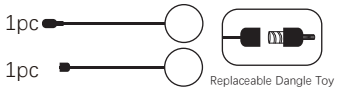

V

1

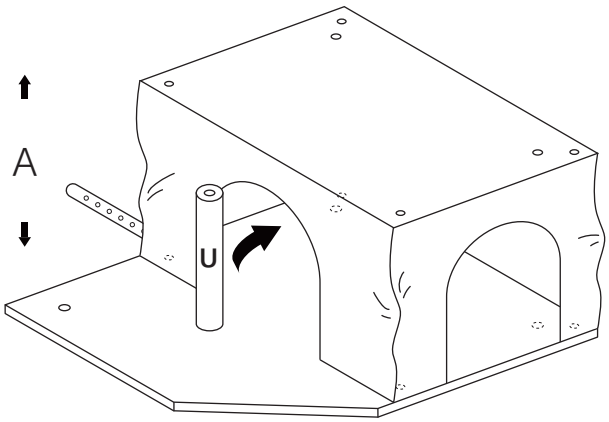

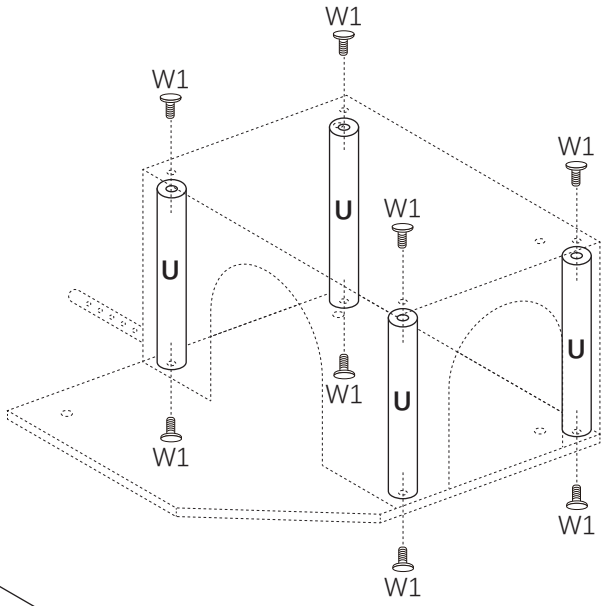

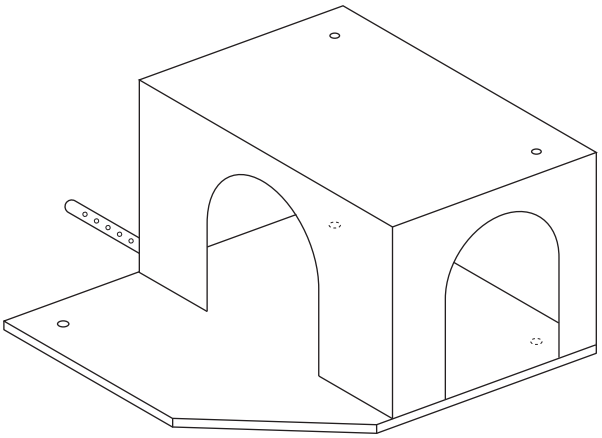

2

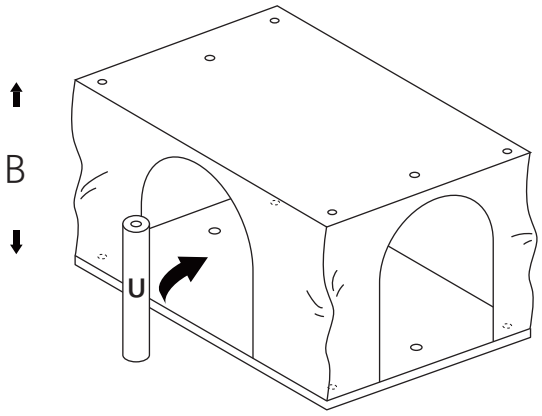

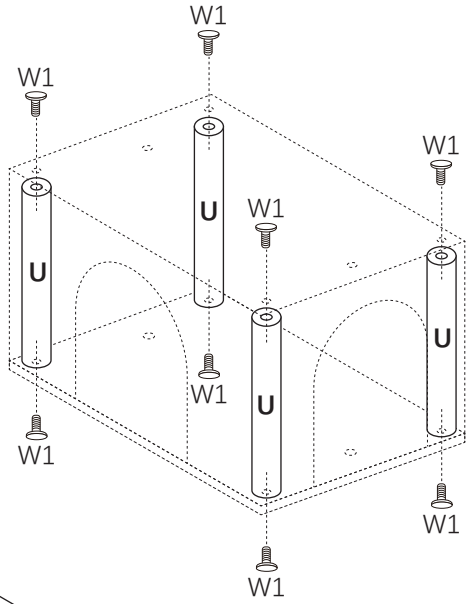

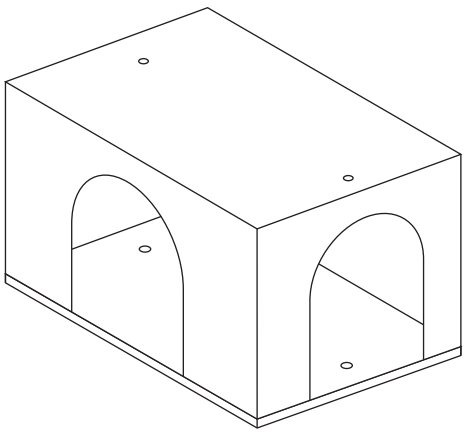

3

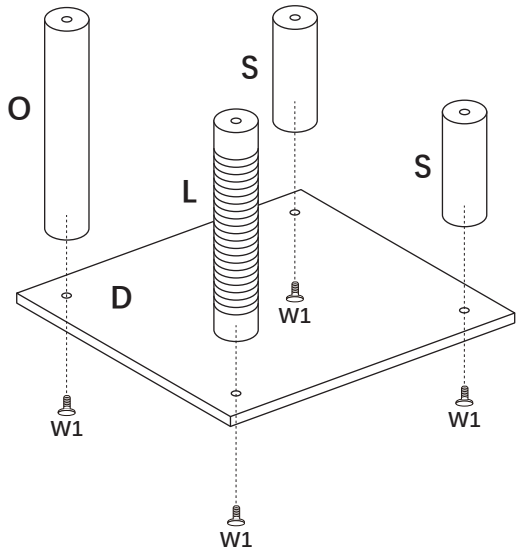

4

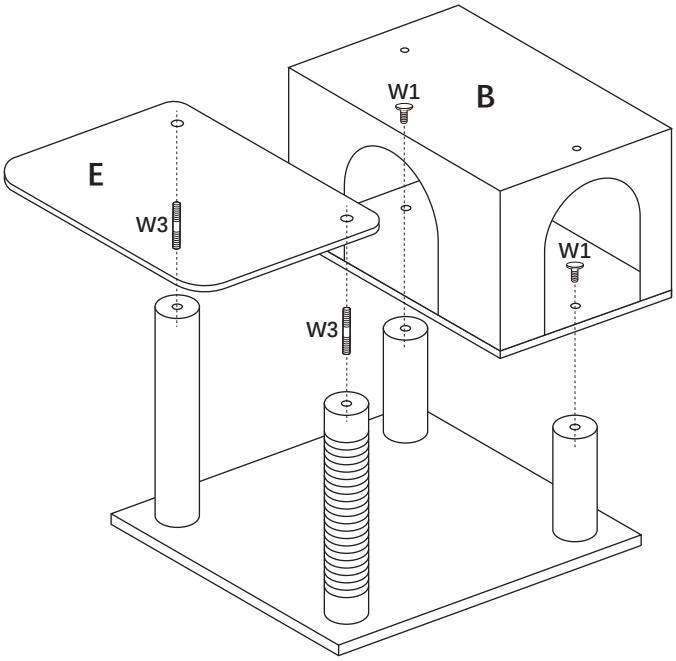

5

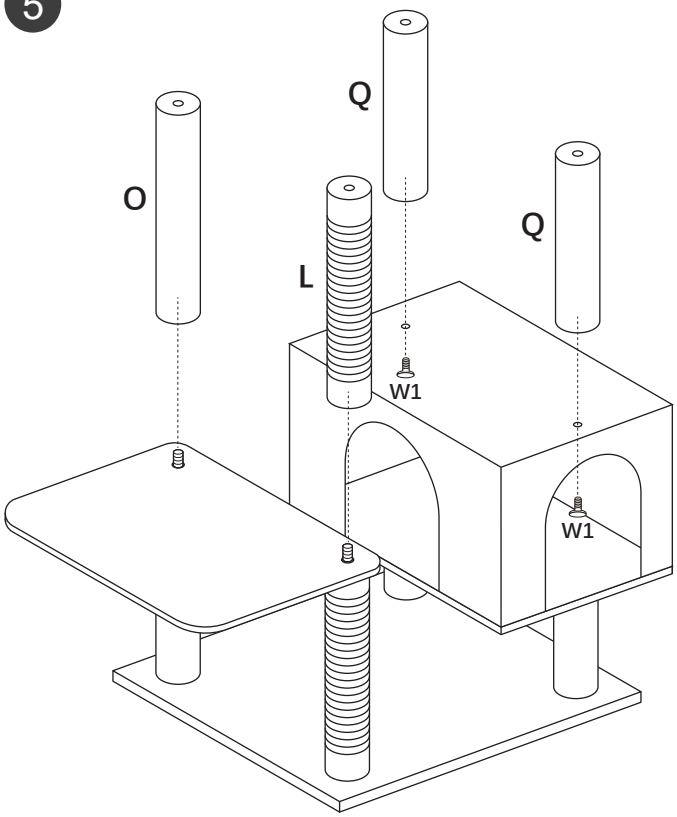

6

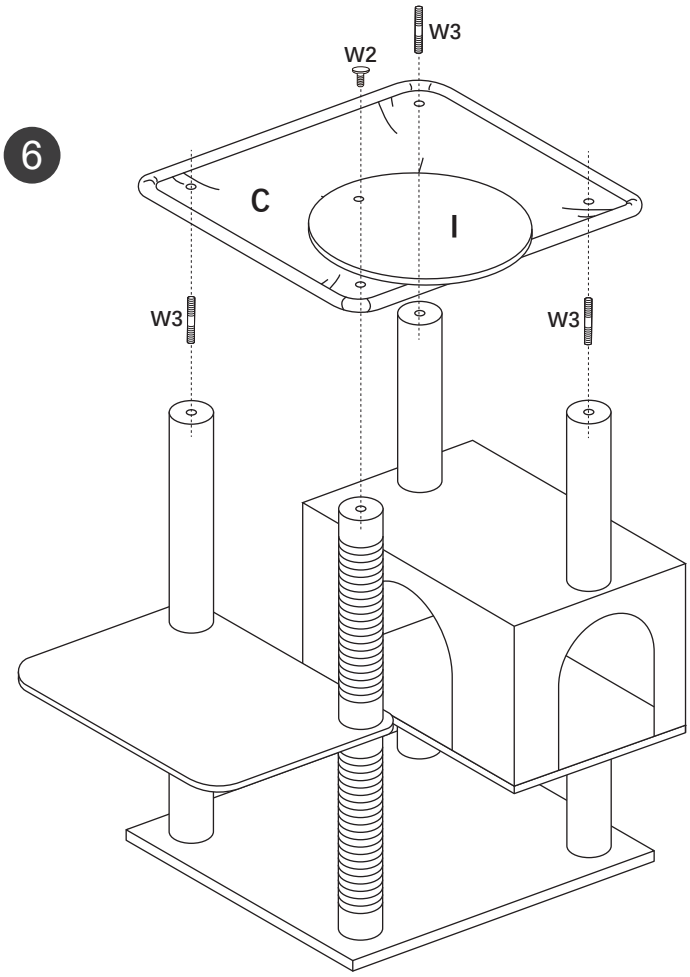

7

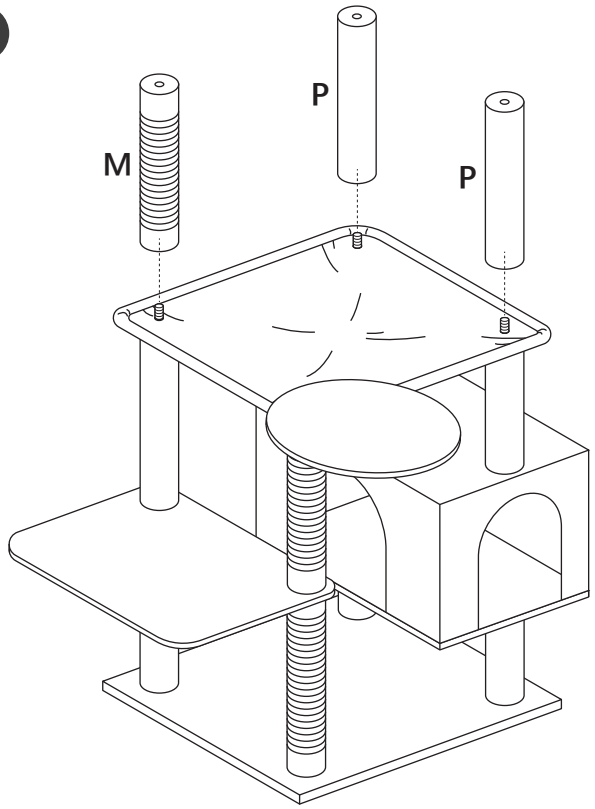

8

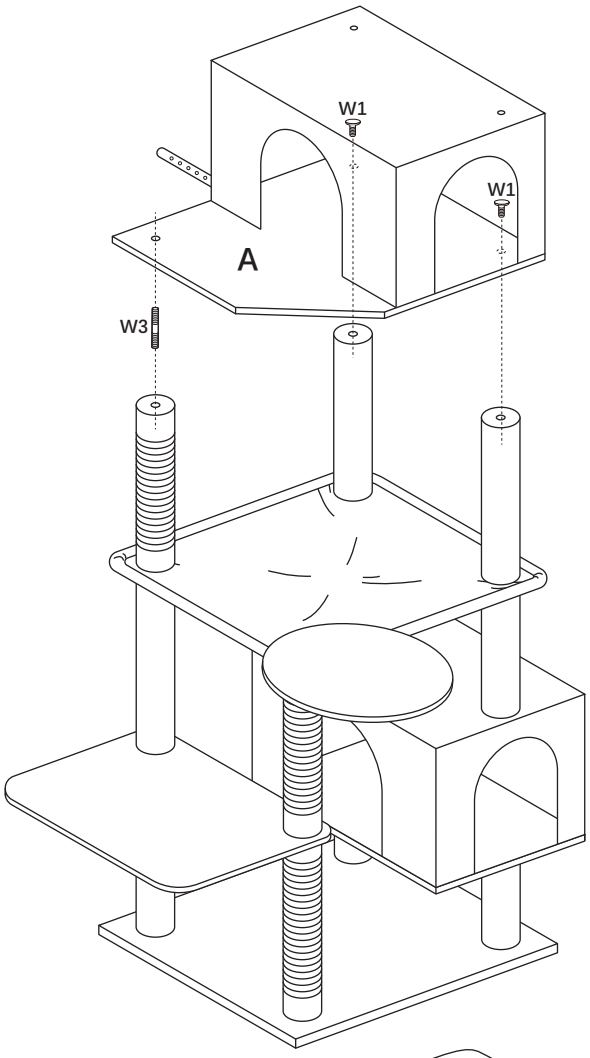

9

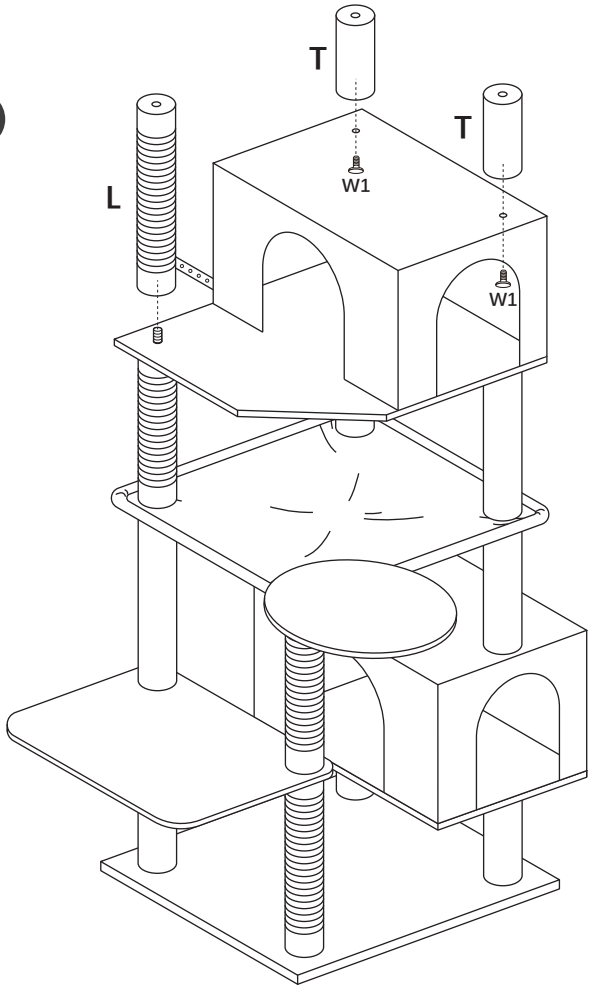

10

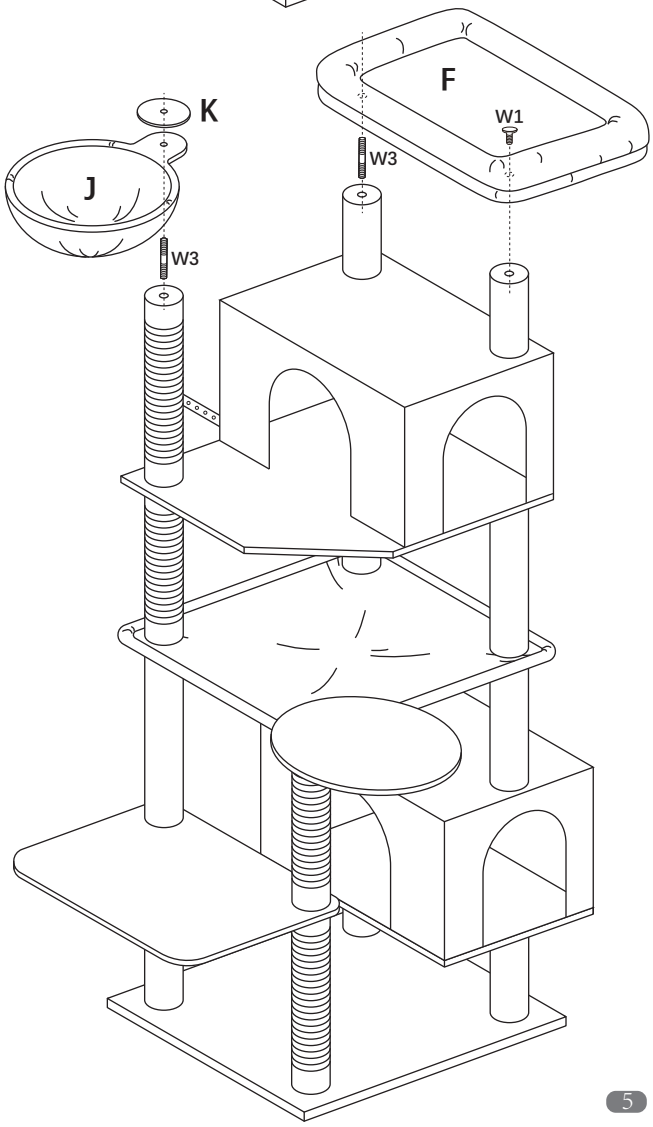

11

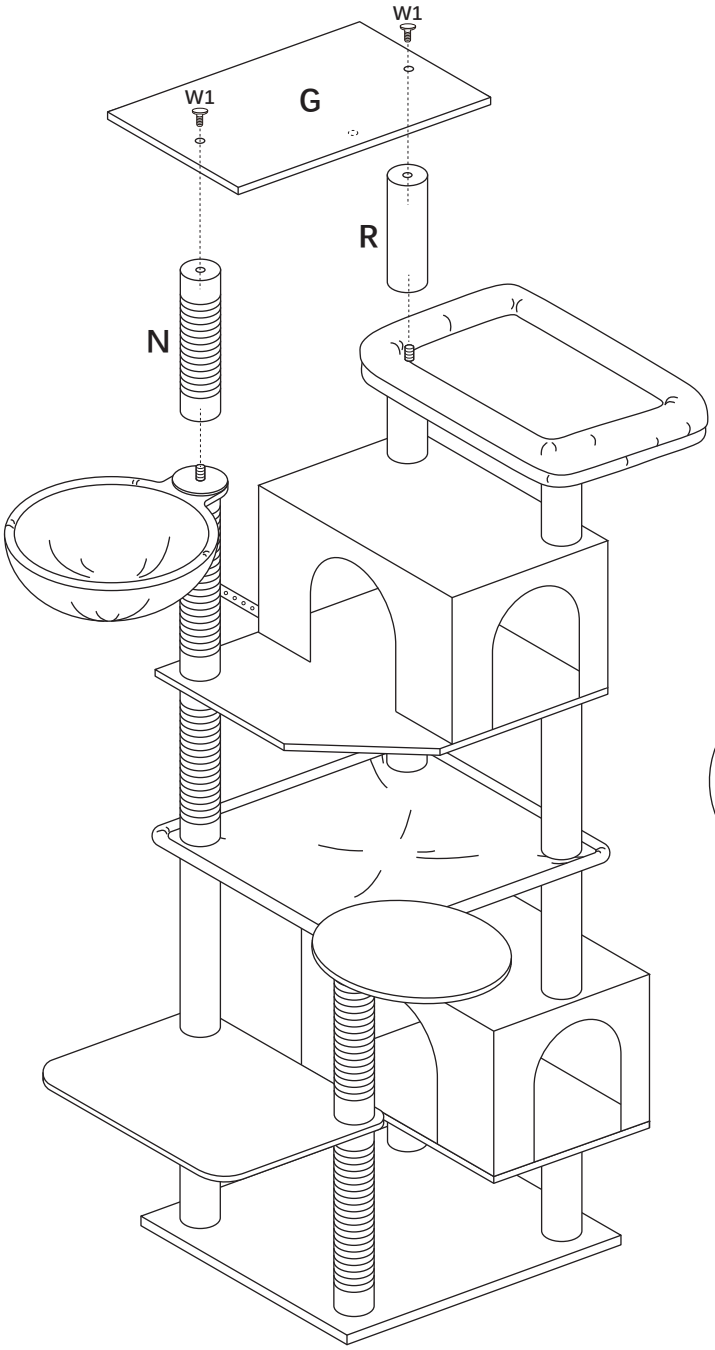

12

