WARNING! TIPPING HAZARD – Unanchored furniture can tip over

WARNING: CHECK FOR HIDDEN PIPES AND CABLES BEFORE DRILLING.

IMPORTANT: IF YOUR WALLS ARE NOT SOLID LIKE BRICK OR STONE, YOU WILL REQUIRE SPECIALIST FITTINGS (NOT SUPPLIED)

- Place fixing strip against the wall and mark position for drilling hole.
- Drill hole in your wall to a depth of 30mm using a 6mm drill bit. If the surface of your wall is soft and crumbly, we would advise you to use a 5mm drill bit for a tighter fit.
- Insert plug into hole with end flush to the wall surface;
- Attach fixing strip to the wall using the 25mm screw + washer and securely tighten;
- Pre-drill small pilot hole on the back edge of the furniture top using a 2mm drill bit. Attach the other end of the fixing strip to the back edge of the furniture top using the 15mm screw + washer and securely tighten.

6

C = x1
30mm Screw

X = x1
25mm Screw

Z = x2
Washer

Y = x1
Wall Tie

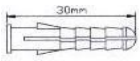

W = x1
Wall Plug
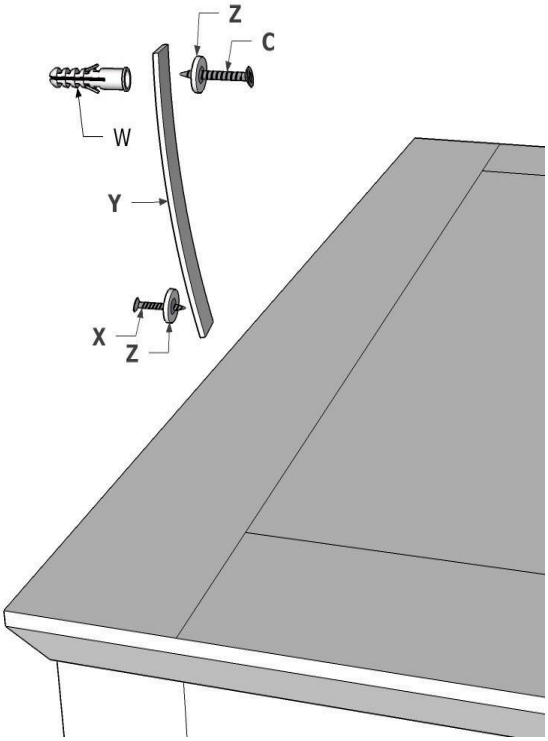
WALL