ASSEMBLY INSTRUCITON

Thank you for purchasing the quality product.Be sure to check all packing material carefully for small parts which may have come loose inside the carton during shipment.Separate, identify and count all parts and metal hardware.Compare with all parts list to be sure all parts are present.If any part(s) are missing or damaged, please contact your local furniture dealer.For efficient and speedy service, please indicate the model number and code letter of part(s) needed.

Do not fully tighten screws until fully assembled

	COMPONENT PARTS	
DESCRIPTION	PART NAME	Q'TY (PCS)
①	BACK CUSHION 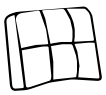	3
②	SEAT CUSHION 	3
③	BACK FRAME 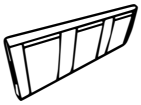	1
④	SEAT FRAME 	1
⑤	ARM FRAME 	1PAIR
⑥	LEG 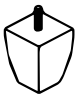	4
⑦	PILLOW 	2

HARDWARES REQUIRED

Ⓐ  FLAT WASHER - 5 PCS

Ⓑ  ALLEN KEY - 1 PC

Ⓒ  BOLT $\frac{5}{16}$" * $1\frac{3}{8}$" - 2 PCS

Ⓓ  BOLT $\frac{5}{16}$" * 3" - 3 PC

Ⓔ  LOCK WASHERS - 2 PCS

Ⓕ  PLASTIC GASKETS - 4 PCS

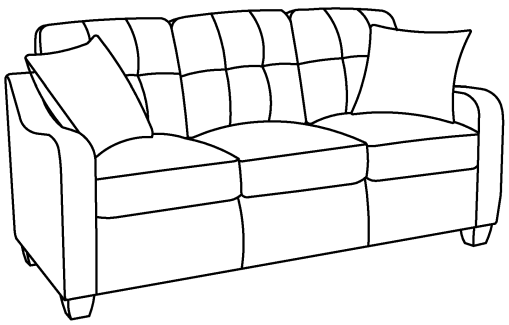

Attention:

*** Some number parts listed on the instruction sheet may not be in parts bag as they may already be assembled. Carefully check parts and packing materials prior to ordering replacements.

How to assemble:

STEP 1:

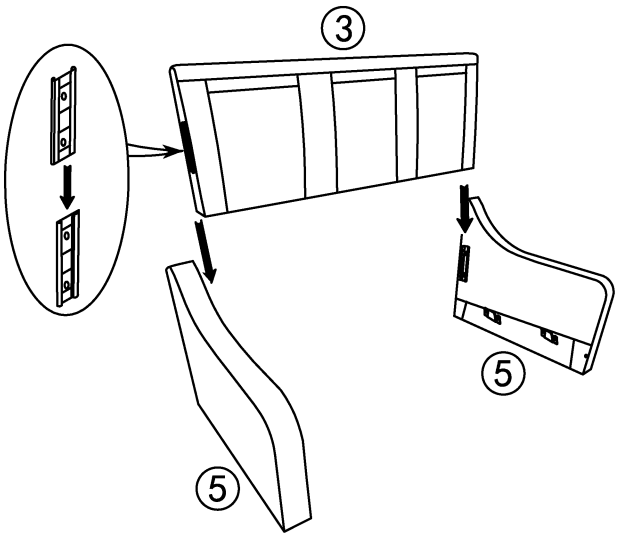

STEP 2:

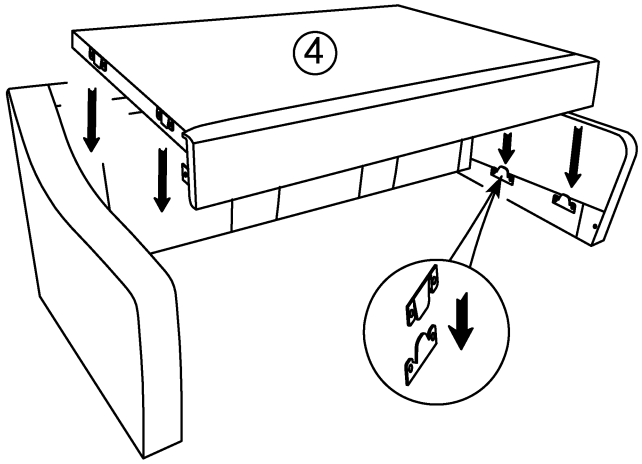

STEP 3:

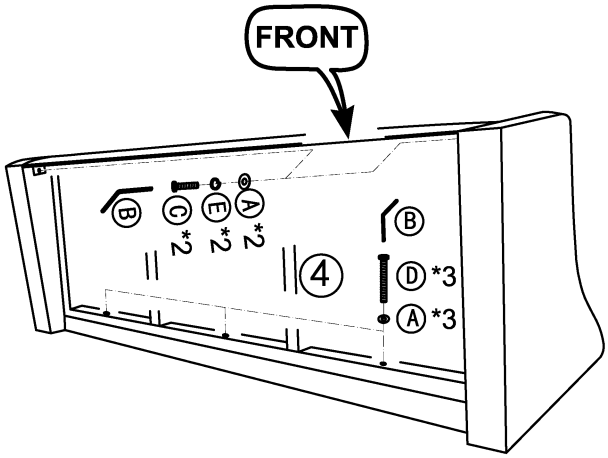

STEP 4:

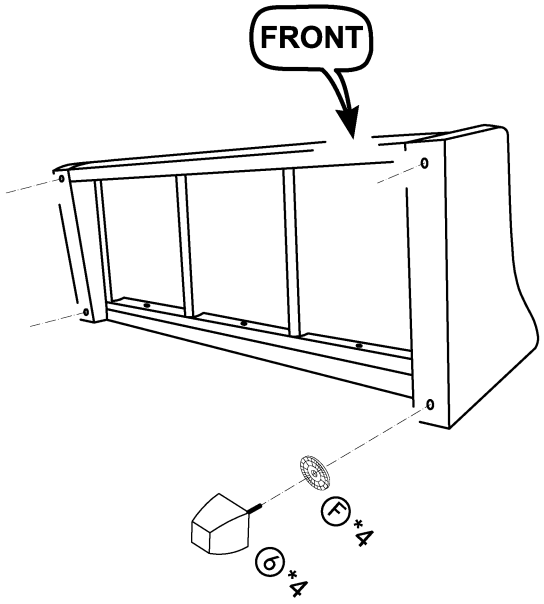

STEP 5:

