Instruction Manual

Please save this manual for future reference.

Product Name:	6Ft Pre-lit Green Artificial Christmas Tree

Thank you for purchasing this product. This product has been manufactured with the highest standards of safety and quality.

PLEASE READ ALL INSTRUCTIONS BEFORE ASSEMBLY.

Unpack all parts from Styrofoam and bubble wrap inside the carton to ensure there are no missing or damaged parts. If any parts are missing or damaged, do not attempt to assemble or use the product.

CARTON CONTENTS:

Description	Quantity
Tree Top (A)	1
Tree Middle (B)	1
Tree Bottom (C)	1
Tree Stand	1
Plug	1

Before You Start

1. Decide on an appropriate location for your product, please read assembly and Instruction procedure carefully. Note: This tree may utilize light sets that are marked for indoor and outdoor use, but the artificial tree is for indoor display only.
2. Retain the instructions for future use and save the carton for storing your tree.

Assembly and Instruction Procedure (no tools required for assembly):

Remove all packaging (i.e., cardboard or plastic) before beginning. If your artificial tree has snow-flocking, we suggest unpacking the tree on a large cloth. Some of the flocking may come off during unpacking and fluffing of branches.

1. Assemble Tree Stand:
   First step is to assemble the metal stand for the tree. Pull apart the legs of the stand so that they have an "X" shape. Lock the stand in position with the single eye bolt inside the metal tab. (Figure 1 and Figure 2)

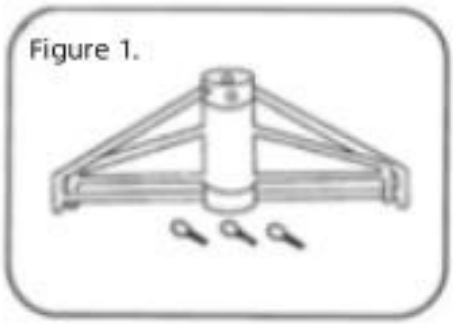

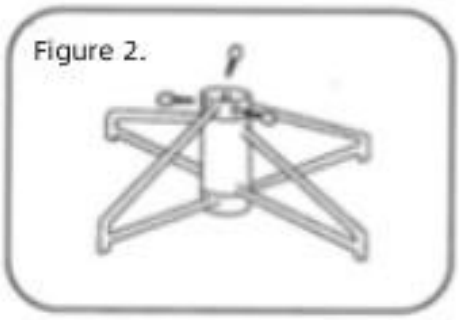

Instruction Manual

Please save this manual for future reference.

Product Name:	6Ft Pre-lit Green Artificial Christmas Tree

2. Assemble the Tree:
   Carefully insert the bottom of the tree section (C) into the assembled stand. Make sure the tree pole is firmly inserted into the stand and turn the screws, so they touch the tree "trunk". Stand the tree upright and straighten by adjusting the tree stand screws in or out. Once the bottom tree section is straight, tighten the screws to secure it.
   Insert the middle section (B) into the bottom section (C). And lastly, insert the tree top (A) into the middle section (B).
   Now that the tree is fully assembled, connect the light plugs as shown in the image below. Attach the plug to the string lights located in the bottom section of the tree and plug into an electrical outlet. If lights do not come on, skip to the section for troubleshooting tips.

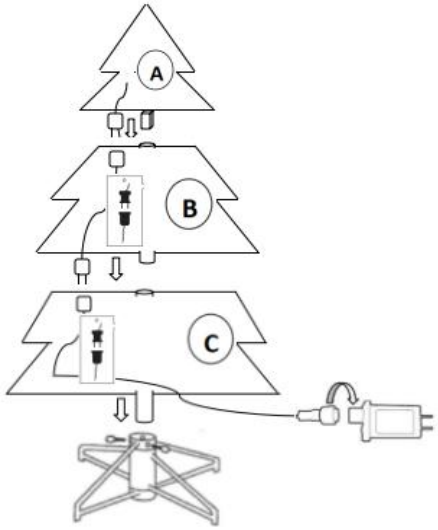

3. Shape the Tree:
   Begin to shape the branches from the bottom of the tree to the top. Start with the tree tips farthest away from the center pole.
   After shaping the tree, step back to look for any gaps. Reshape branches as needed. You can upsweep the branch tips for uniform look. Once you have the tree the way you want it, you can start decorating!


Fig.1


Fig.2


Fig.3

Instruction Manual

Please save this manual for future reference.

Product Name:	6Ft Pre-lit Green Artificial Christmas Tree

Warnings:

1. Risk of Fire and Electric Shock – please follow instructions and warnings on string lights if adding lights to trees.
2. Do not place near fireplaces, candles, outdoor heaters, or other similar sources of heat. This item is not flame retardant.
3. Do not install near pools, fountains, tubs, sinks, or other areas of standing water that the tree may fall or blow into.
4. Keep wires clear of being pinched or cut during assembly or installation. Discard sets with cut or pinched insulation.
5. Make sure final assembly stable enough to hold the tree upright.
6. Do not use candles on tree. Use only with the pre-installed string lights included.
7. This product is for decoration use only. Not to be used by children as a toy. Keep out of reach of small children.

Troubleshooting:

1. Some bulbs are not lighting, or lights do not come on at all: Search for any loose plug connections between the tree sections. Search for loose or missing bulbs.
2. Tree is not straight: Try adjusting the screws in the tree stand to adjust the tree. It is better if the tree is in the vertical position when adjusting.

Note: If these actions do not resolve the issue with the tree, please do not disassemble the tree yet. Please contact customer service for assistance.

Storage:

1. Remove all decorations (this does NOT include the pre-installed string lights).
2. Starting from the top, carefully unassembled the tree sections. Press the tree tips back up against the pole.
3. Place the branch sections back into the carton, putting the longest one on the bottom.
4. Store the product in a cool, dry location protected from sunlight where the temperature does not exceed 35˚C (95˚F).