Solid Wood Bed

Assembly Instruction – Please keep properly for future reference.

If you find any missing boxes, damaged parts, or accessory shortages, please contact the customer service team of your purchasing channel immediately. We will resolve the issue as quickly as possible.

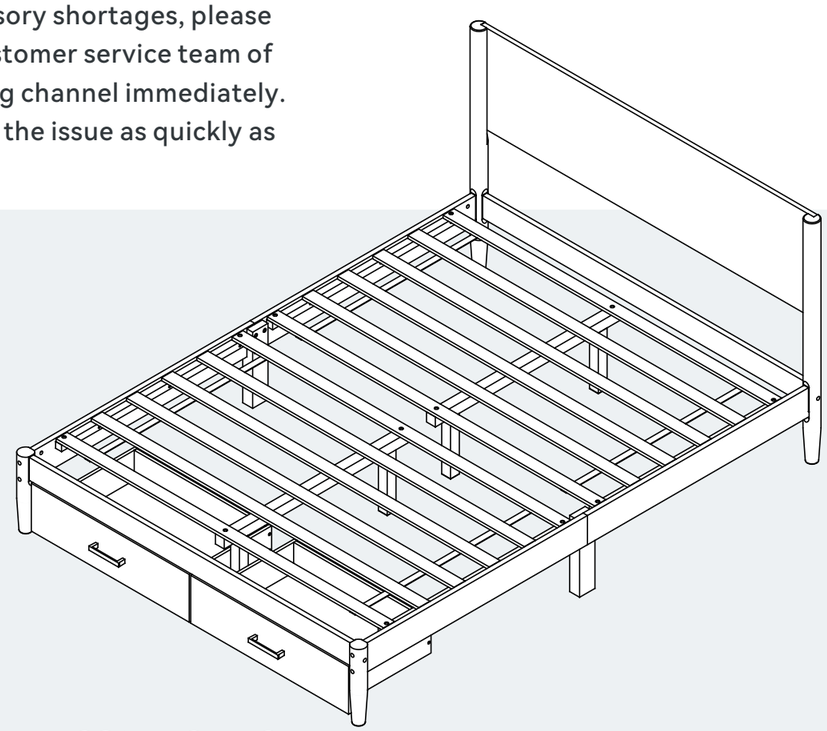

CONTACT US

- **Email: service@grandtunnel.com**
  In order to receive assistance more quickly, please provide

THE FOLLOWING INFORMATION:

- Order number
- Purchase platform
- Purchase date
- Detailed description of the issue along with photos (if applicable)

Important – Please read these instructions carefully before starting the installation.

SKU:
C002220030
C002220040
C002220050
C002220060

V1.0

EN

Solid Wood Bed

Before Assembly

Thank you for choosing this product!
To ensure safe use and long-term maintenance, please read this manual carefully and keep it properly for future reference.

Important Notice:

- To ensure a smooth and successful installation, please read this guide carefully. It provides essential information about the required tools, materials, and assembly steps. Follow the instructions in each section to avoid any issues caused by improper installation.
- Please review all operational and safety guidelines to ensure proper and secure assembly.
- This guide reflects the most current product information available at the time of printing. We reserve the right to make changes to product features, packaging, or availability without prior notice.
- Before starting assembly, ensure that all necessary electrical and environmental preparations are completed.
- This manual contains important instructions regarding installation, cleaning, and maintenance. Please read it thoroughly and keep it for future reference.

Safety Warnings

1. Follow Warning Labels

Do not remove, alter, or obscure any warning labels on the product or packaging. Always adhere to the displayed safety instructions to ensure proper usage.

2. Conduct Regular Inspections

Periodically inspect all components to ensure they are properly installed, undamaged, and securely fastened. Report any issues to customer support immediately.

3. Practice Safe Usage

Avoid playing, jumping, or engaging in activities on or under the bed, as this may cause injury or structural damage.

4. Beware of Rope Hazards

Do not attach ropes, hooks, straps, or any non-designated accessories to any part of the bed, as this may pose a safety hazard.

Email : **service@grandtunnel.com**

5. Keep This Manual for Reference

Store this manual in a safe and accessible place for future reference.

6. Safety is a Shared Responsibility

Ensuring safety is a joint responsibility between the manufacturer and the user. Please follow all safety precautions during assembly and use.

Disclaimer

We are committed to delivering safe, high-quality, and reliable products to our customers. If you have any questions, concerns, or require further assistance, please contact our customer service team without hesitation.

Maintenance and Care Recommendations

1. Regular Cleaning

To maintain hygiene and prevent bacterial growth, clean the product regularly. Use a damp, well-wrung cloth to avoid excess moisture and prevent surface scratches.

2. Prevent Corrosion

Keep the product away from acidic or alkaline substances, as they may cause corrosion or damage to the materials.

3. Use Only Authorized Replacement Parts

Do not use unauthorized or third-party replacement parts, as they may compromise the product's safety and durability. If a replacement is needed, contact the manufacturer or an authorized dealer for approved parts.

4. Cleaning Precautions

Do not machine wash or rinse any part of the product directly with water, as this may damage the materials and reduce product lifespan.

5. Prevent Pests

Keep wooden furniture away from damp or humid areas to prevent pest infestations and wood damage. Use a dehumidifier or air conditioner during humid seasons to maintain a dry environment.

6. Protect from Sunlight

Avoid placing furniture in direct sunlight, as prolonged exposure may cause cracking, discoloration, or fading. If sunlight exposure is unavoidable, use curtains or shades to minimize damage.

Email : **service@grandtunnel.com**

EN

7. Keep Away from Fire
Position furniture away from heat sources and open flames to prevent damage and maintain its condition.

8. Perform Regular Care
Apply furniture oil periodically to maintain the wood's shine, prevent cracks, and extend its lifespan.

9. Clean Frequently
Regularly vacuum dust and debris, especially underneath furniture, to keep it clean and hygienic.

10. Maintain a Dry Environment
Ensure good ventilation to prevent moisture buildup, which can damage wood. Use a dehumidifier if necessary to protect the furniture.

11. Avoid Corrosive Liquids
Keep furniture away from acidic or alkaline substances, as these can damage the surface and reduce durability.

12. Use a Damp Cloth for Cleaning
Wipe furniture with a well-wrung damp cloth to prevent water damage or swelling. Avoid excessive moisture exposure.

13. Limit Sun Exposure
Excessive sunlight can dry out and weaken wood. Position furniture in shaded areas or use UV-blocking curtains to protect it from damage.

Customer Service Guide

Thank you for choosing our product! We are committed to providing you with excellent service. If you find any missing parts, damaged packaging, or product damage after receiving all packages, please follow the steps below to quickly contact our customer service team. We will do our best to resolve your issue.

1. Missing Parts

Verify Parts:

1. Refer to the "Parts List" in the manual to verify the name, specifications, and quantity of the missing parts.
2. Take a clear photo of the parts list and mark the missing parts with detailed information, e.g., "Missing 5 pieces of M6×30mm screws."

Contact Us:

By Email:
Send an email to **service@grandtunnel.com**, with the subject line "Missing Parts Issue." Include the following in the email:
- A description of the missing parts and a photo of the parts list.
- Order details (order number, purchase platform, purchase date).

2. Product or Packaging Damage

If it affects normal use:

Steps:
1. Take clear photos or videos showing the damaged parts and the extent of the damage (multi-angle shots are recommended).
2. Email the photos/videos along with order details to **service@grandtunnel.com**, with the subject line "Product Damage Issue."

Resolution:
After verification, we will arrange for a replacement part, product exchange, or refund as quickly as possible.

If it does not affect normal use:

Steps:
1. Contact our customer service team (by email: **service@grandtunnel.com**).
2. Provide a description of the damage and include relevant photos or videos.

Resolution:
We will provide repair guidance or an appropriate compensation plan based on the specific situation.

Contact Us:

Customer Service Email: **service@grandtunnel.com**

Helpful Tips

To process your issue efficiently, please prepare the following information:

- Order details (order number, purchase platform, purchase date).
- Clear photos or videos.
- We are committed to providing quick and professional solutions, no matter the size of the issue, to ensure your satisfaction.

Thank you for your trust and support!
We hope you enjoy using our product!

EN

Parts List

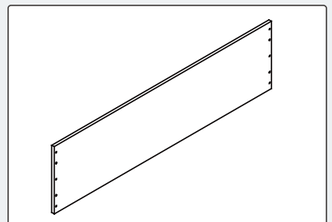
1 x1

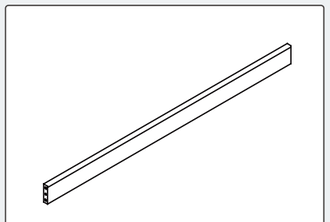
2 x1

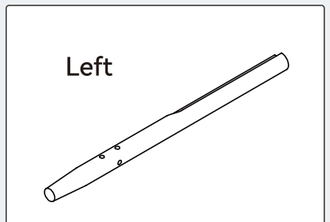

3 x1

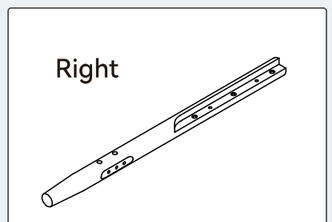

4 x1

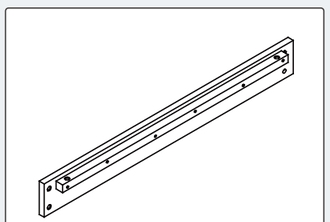
5 x2

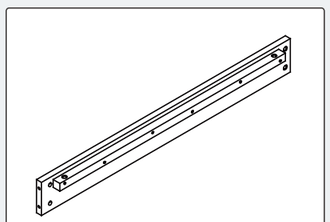
6 x2

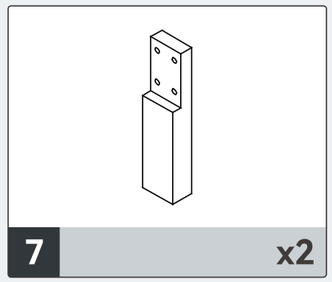
7 x2

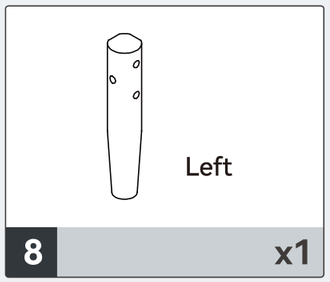

8 x1

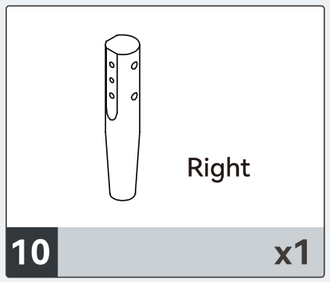

10 x1

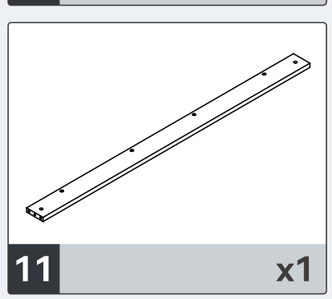
11 x1

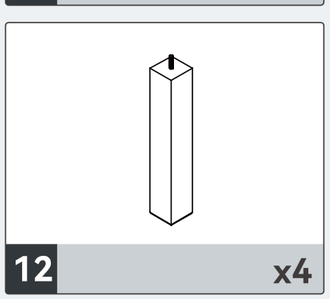
12 x4

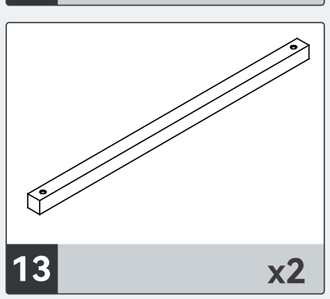
13 x2

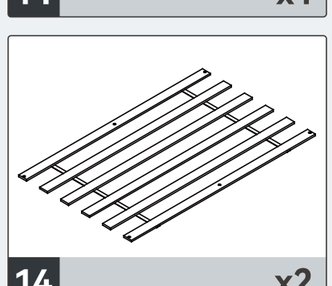
14 x2

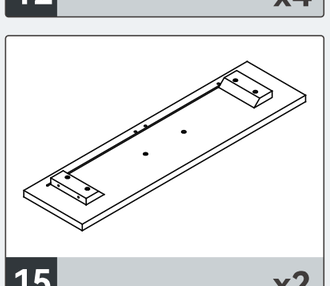
15 x2

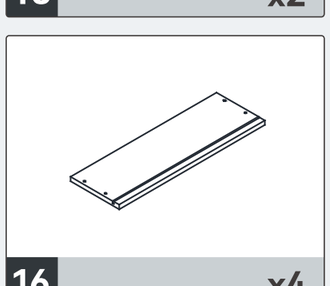
16 x4

Email : **service@grandtunnel.com**

EN

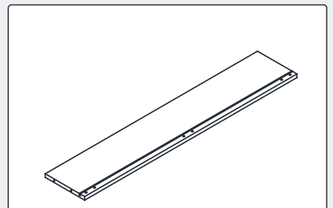
17 x2

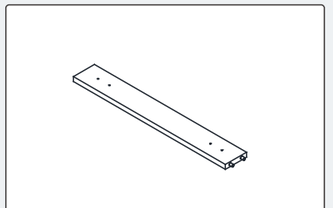
18 x4

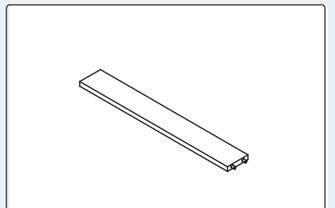
19 x2

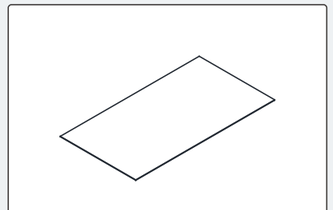
20 x2

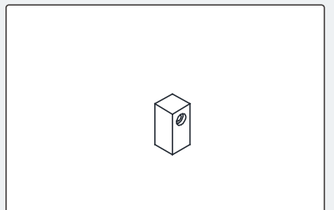
21 x2

Hardware List

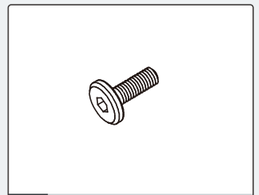
A Φ5/16x25mm x12

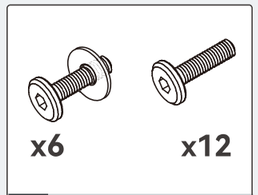

B Φ5/16x38mm x18

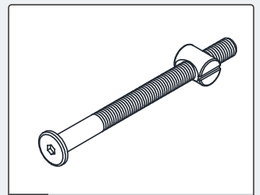
C Φ5/16x90mm x12

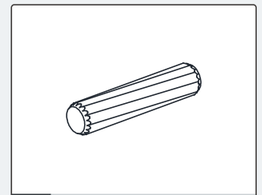
D Φ10x30mm x12

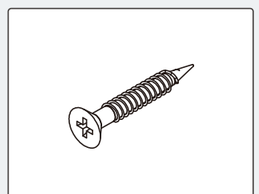
E (#9)5x32mm x28

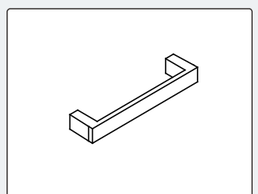
F 137x25x16mm x2

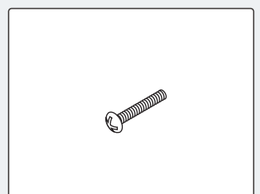
G 5/32x22mm x4

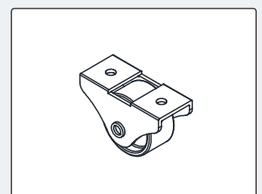
H Φ25xH30mm x8


I (#7)x12mm x16

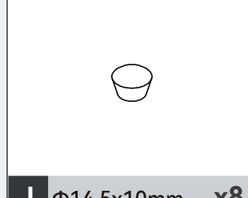
J Φ14.5x10mm x8

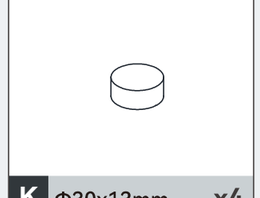
K Φ30x13mm x4

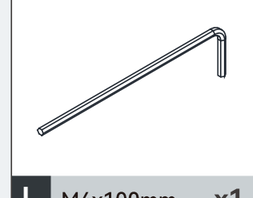
L M4x100mm x1

Email : **service@grandtunnel.com**

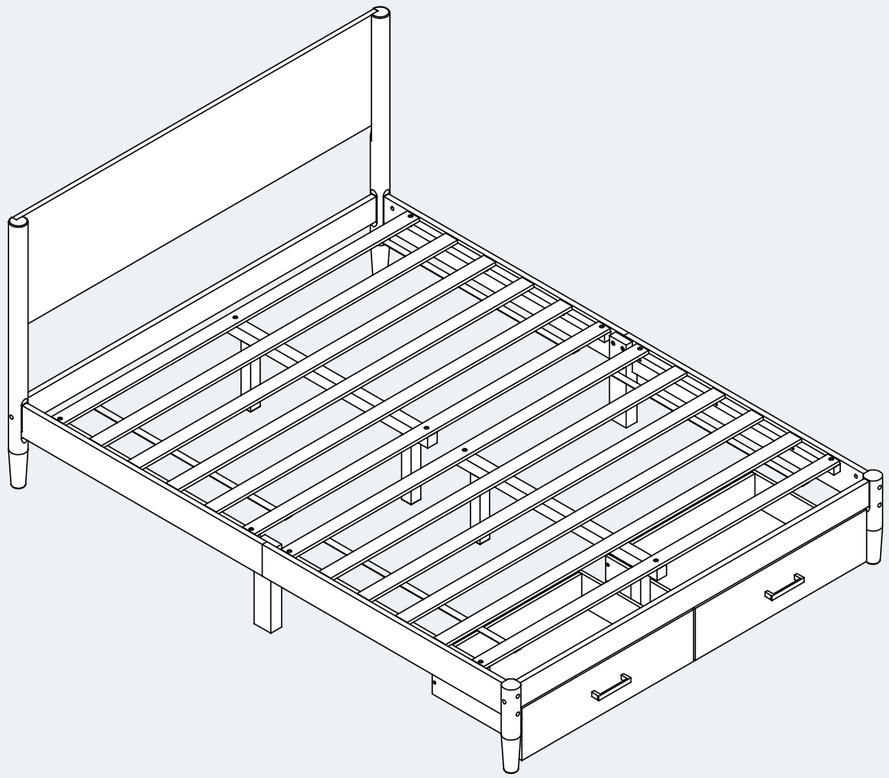

Important:
In each of the previous steps, tighten all screws to approximately 70% to stabilise the overall frame during assembly. Do not fully tighten any screws until the final step is completed.

Tools & Equipment

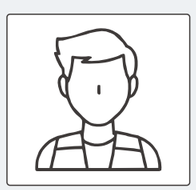

2 people needed

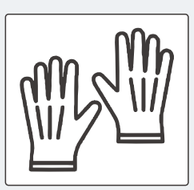

Work gloves



Tape measure

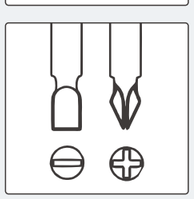

Other Tools Required
Phillips Screwdriver
(Not Included)

Email : **service@grandtunnel.com**

Headboard Section Installation

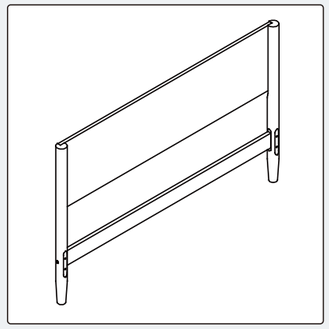

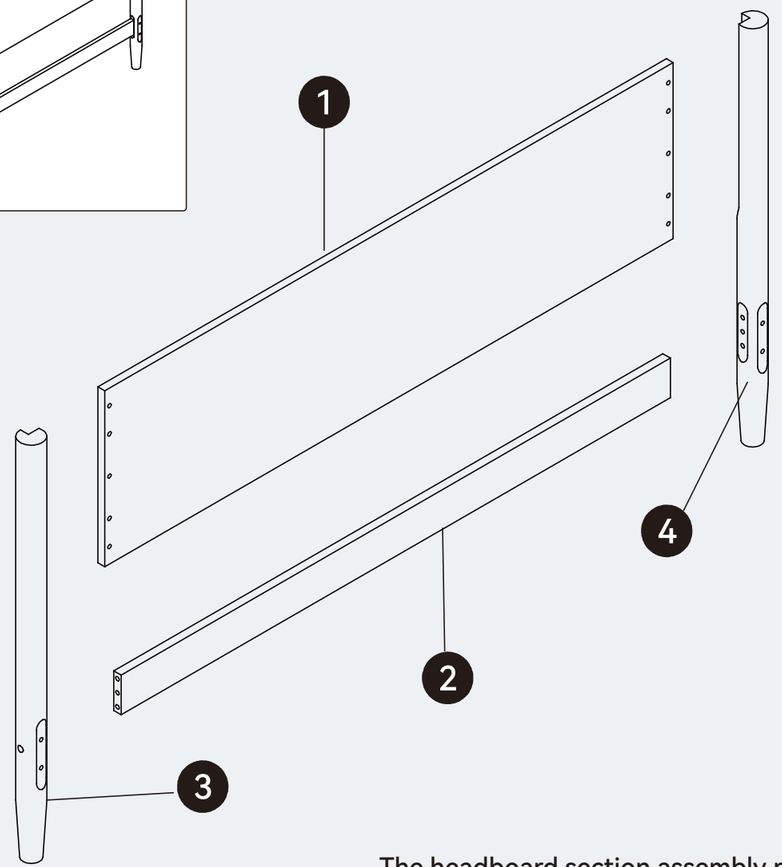

The headboard section assembly requires a total of labeled panels shown in the diagram. Please locate all of them and prepare them for use.

Hardware Accessory List

B	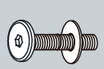	Φ5/16x38mm x6
C		Φ5/16x90mm x2
D		Φ10x30mm x8

Note:

Ensure all hardware components are accounted for before beginning assembly. Missing or damaged hardware should be reported to customer service for replacement.

Email : **service@grandtunnel.com**

EN

Step 1 Headboard Section

C Φ5/16x90mm x2

D Φ10x30mm x4

L M4x100mm x1

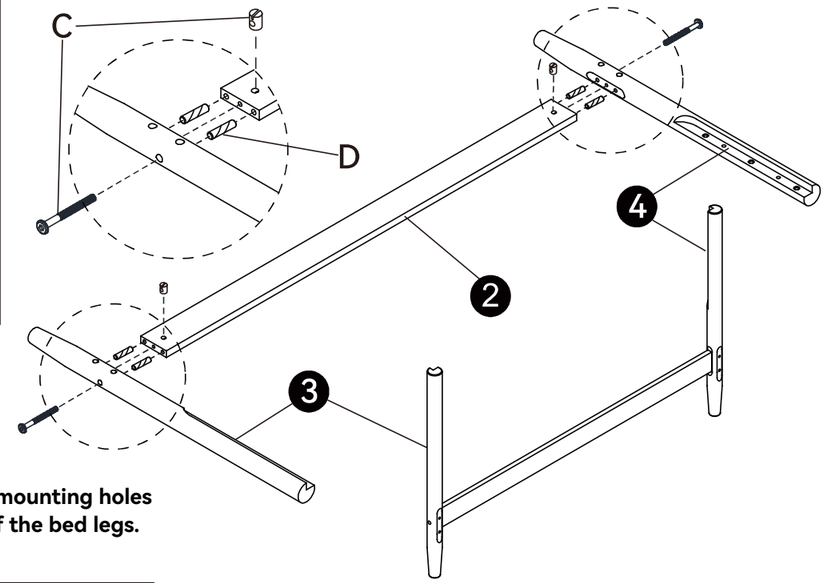

After assembly, the mounting holes are on the outside of the bed legs.

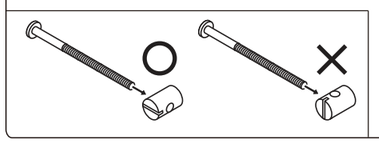

Connect and securely fasten part (2) to parts (3) and (4) using hardware (C) and (D). Pay attention to the orientation of the mounting holes.

Step 2 Headboard Section

B Φ5/16x38mm x6

D Φ10x30mm x4

L M4x100mm x1

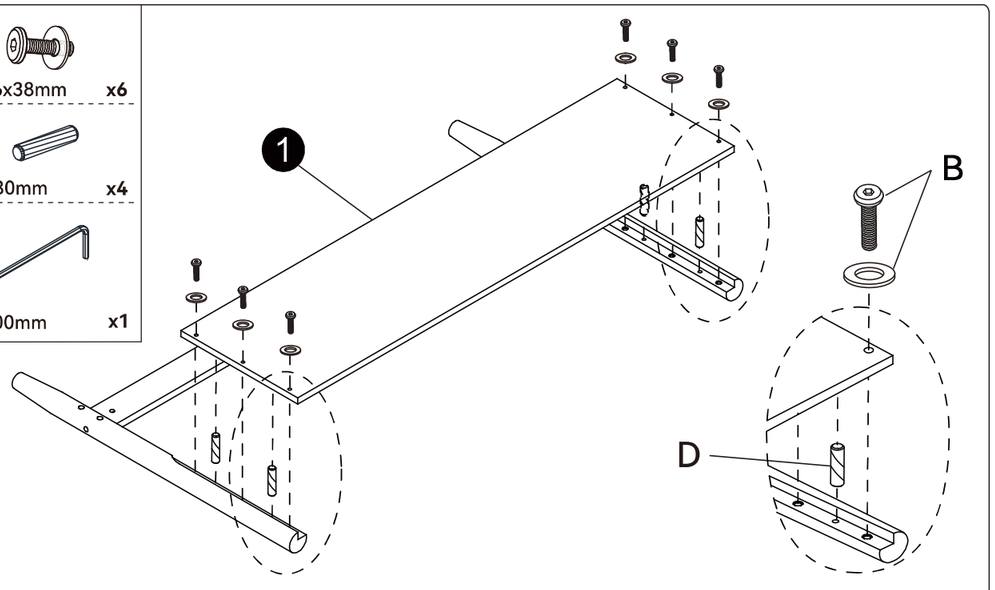

Attach and securely fasten part (1) to the assembled component using hardware (B) and (D).

Email : **service@grandtunnel.com**

Frame Parts Section Installation

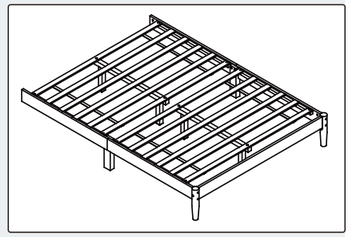

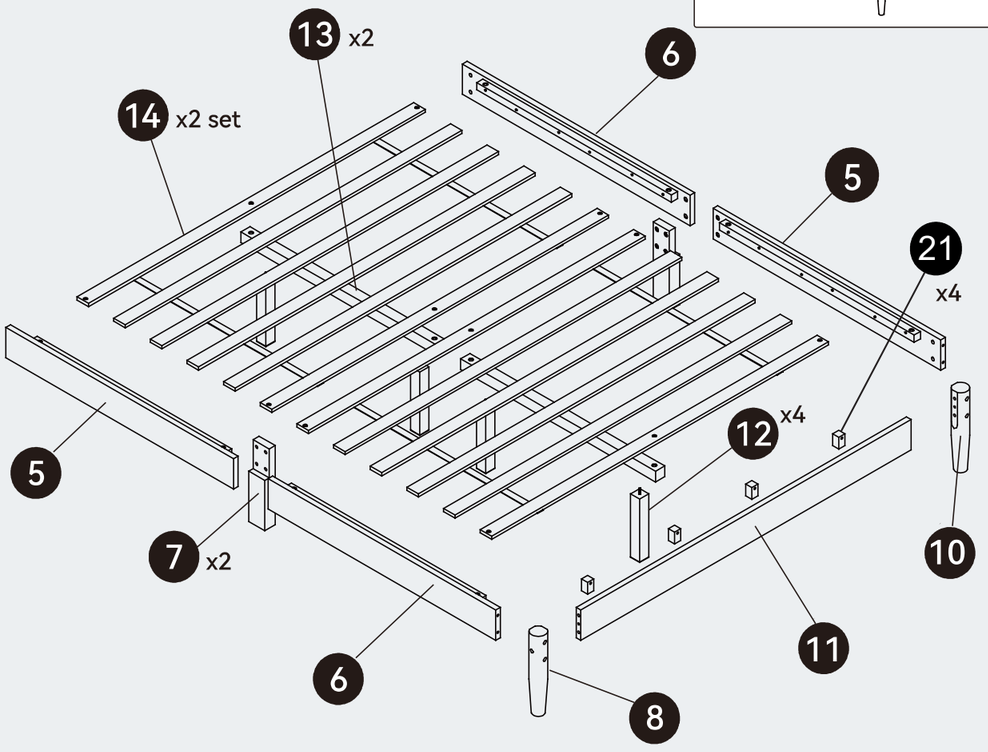

Hardware Accessory List

A	Φ5/16x25mm	x12
B	Φ5/16x38mm	x12
C	Φ5/16x90mm	x10
D	Φ10x30mm	x4

The frame parts section assembly requires a total of labeled panels shown in the diagram. Please locate all of them and prepare them for use.

Note:

Ensure all hardware components are accounted for before beginning assembly. Missing or damaged hardware should be reported to customer service for replacement.

Email : **service@grandtunnel.com**

EN

Step 3 — Frame Parts Section

C Φ5/16x90mm x2

D Φ10x30mm x4

L M4x100mm x1

After assembly, the mounting holes are on the outside of the bed legs.

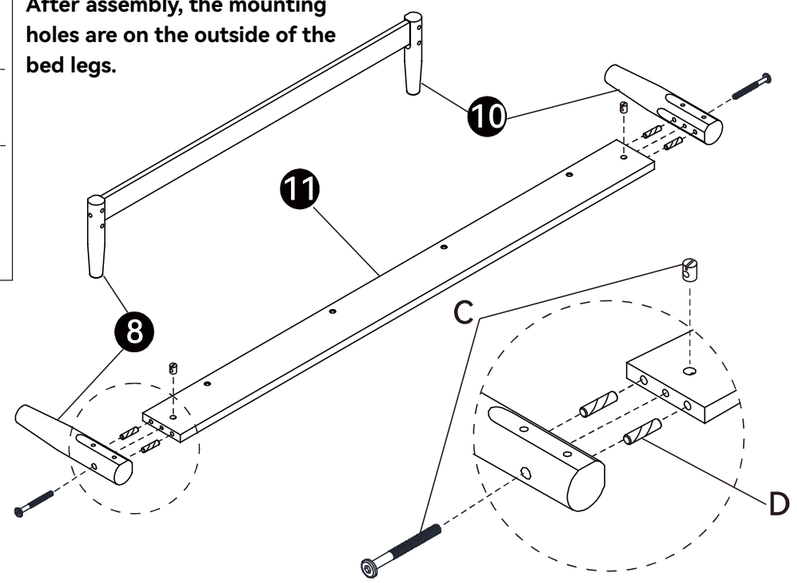

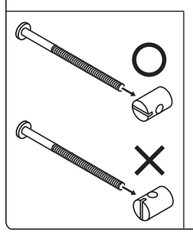

Attach and securely fasten part (11) to parts (8) and (10) using hardware (C) and (D).

Step 4 — Frame Parts Section

B Φ5/16x38mm x4

L M4x100mm x1

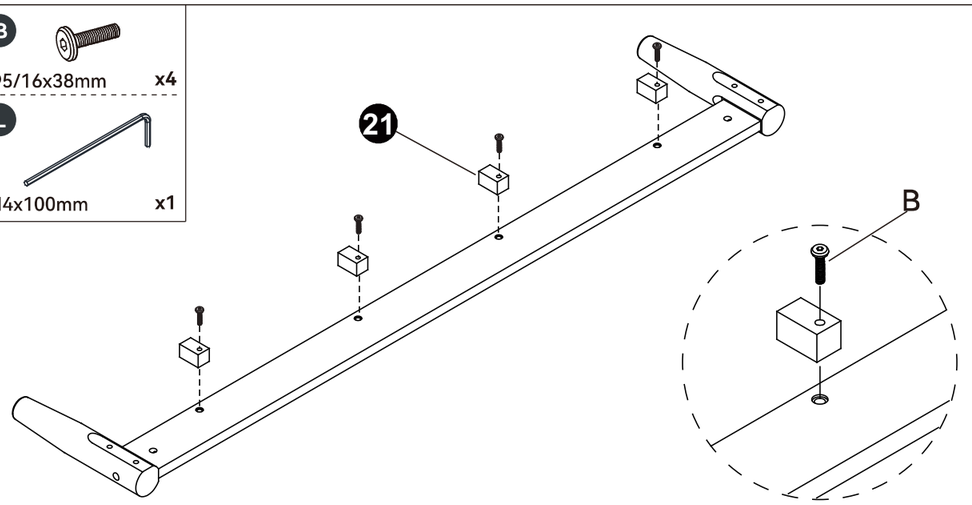

Install part (21) onto the completed assembly using hardware (B).

Email : **service@grandtunnel.com**

Step 5 — Frame Parts Section

B Φ5/16x38mm x8

L M4x100mm x1

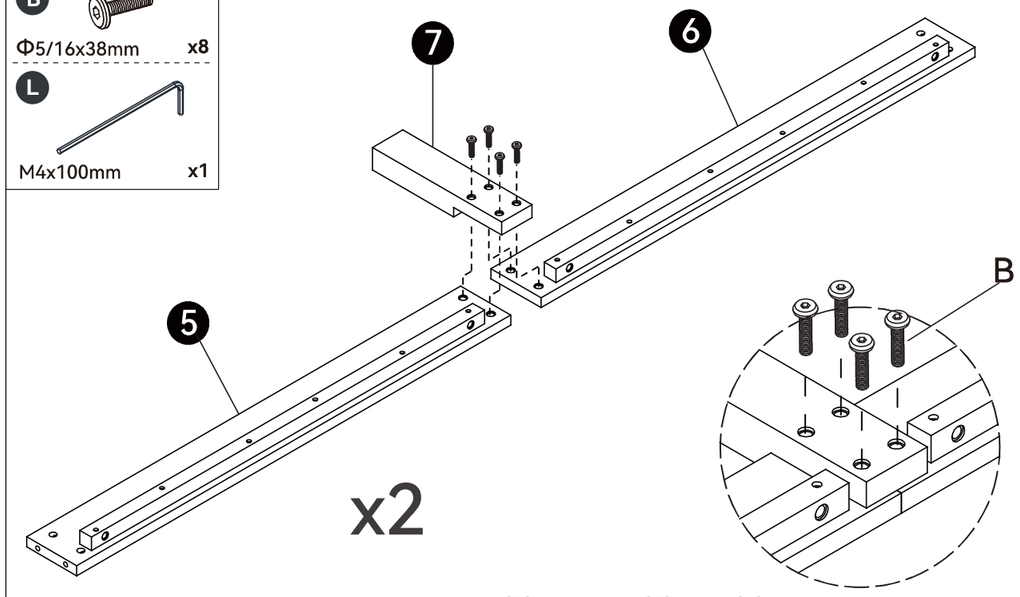

Attach and securely fasten part (7) to parts (5) and (6) using hardware (B). Make two sets in total.

Step 6 — Frame Parts Section

C Φ5/16x90mm x8

L M4x100mm x1

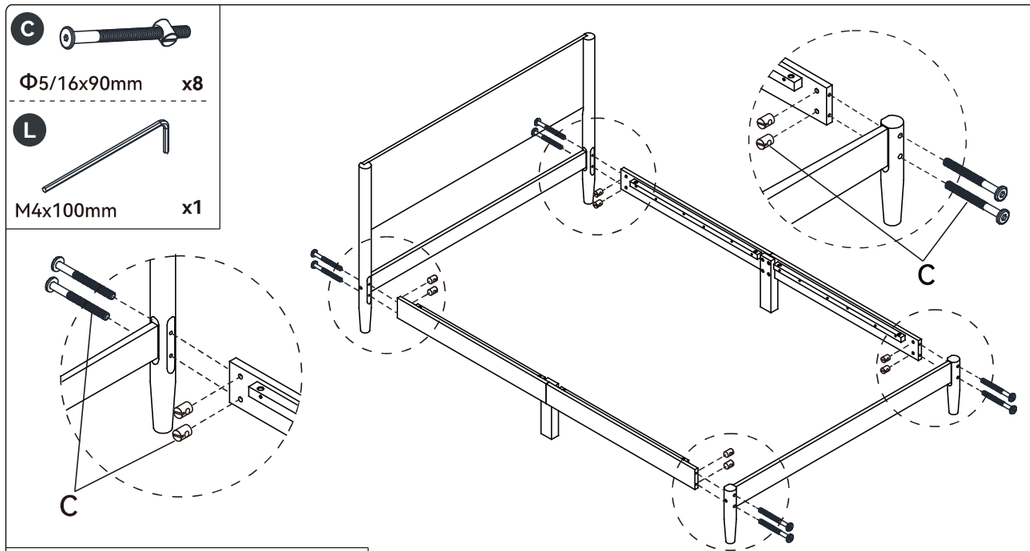

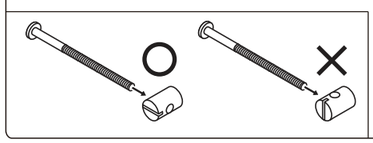

Connect the assembled components using hardware (C).

Email : **service@grandtunnel.com**

Step 7 Frame Parts Section

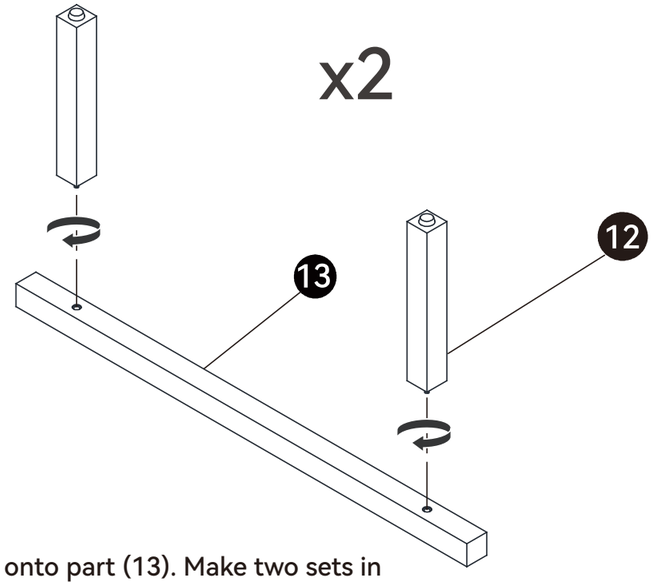

Install part (12) onto part (13). Make two sets in total.

Step 8 Frame Parts Section

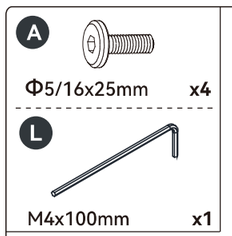

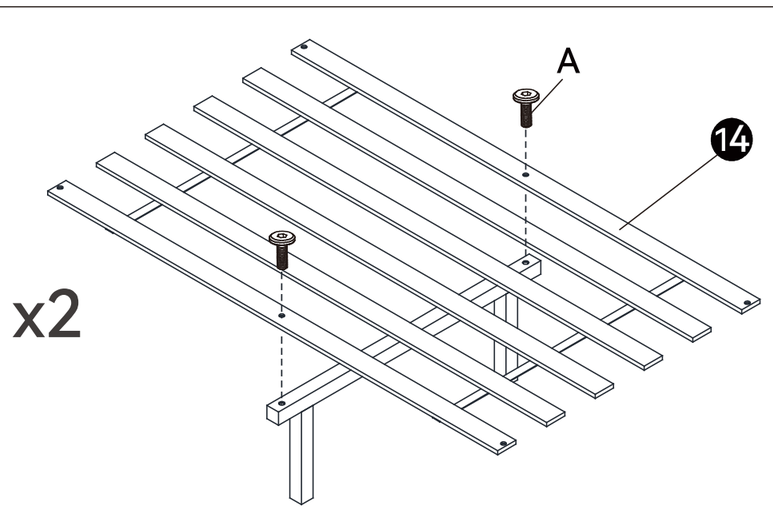

Install part (14) onto the completed assembly using hardware (A).

Email : **service@grandtunnel.com**

EN

Step 9 Frame Parts Section

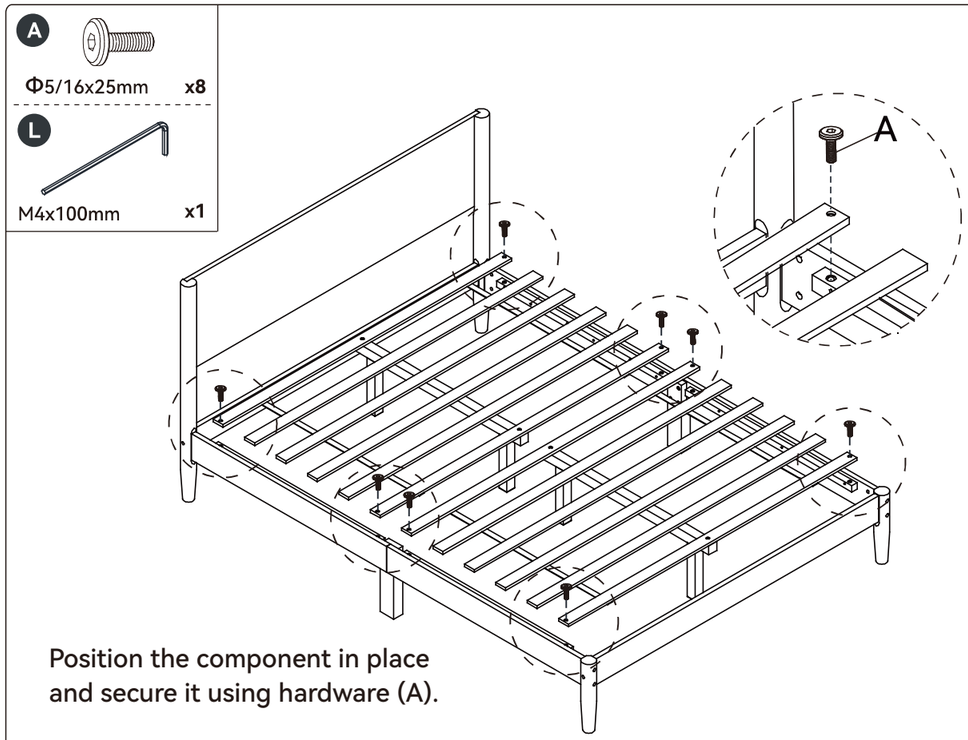

Position the component in place and secure it using hardware (A).

Email : **service@grandtunnel.com**

Drawer Section Installation

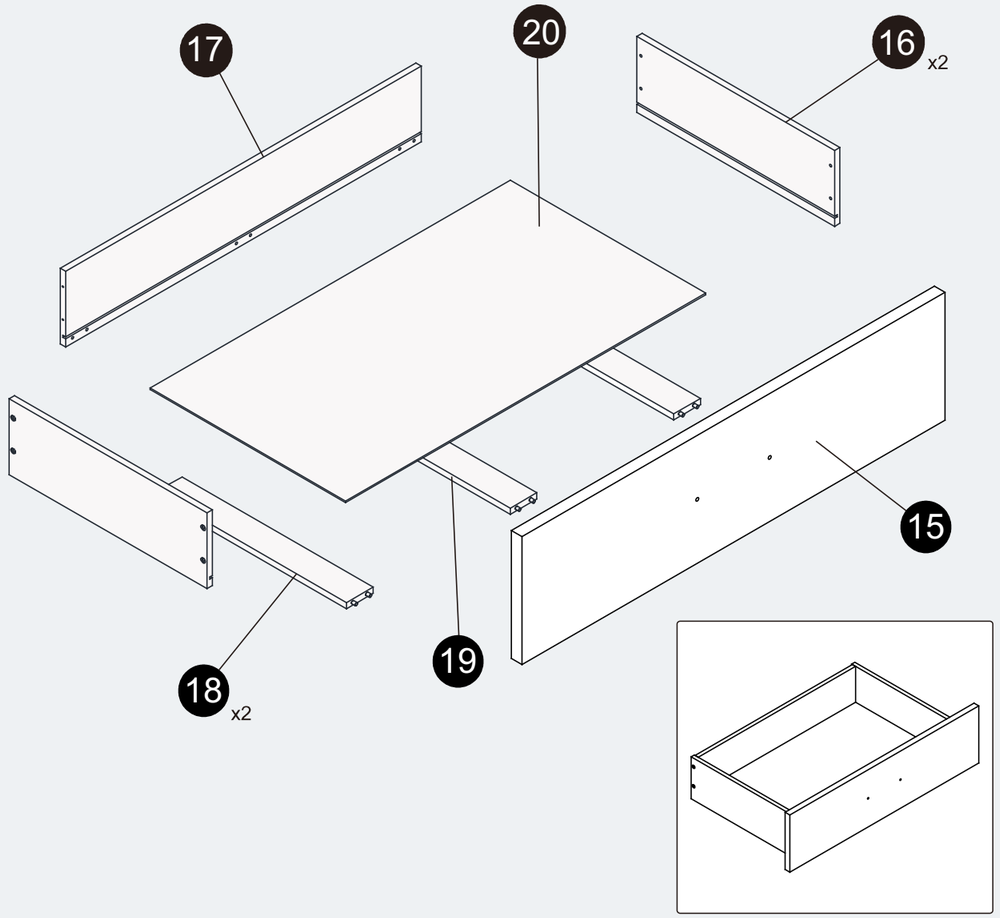

Hardware Accessory List

E		(#9)5x32mm **x28**
F		Φ25xH30mm **x2**
G		5/32x22mm **x4**
H		Φ25xH30mm **x8**
I		(#7)x12mm **x16**

The drawer section assembly requires a total of labeled panels shown in the diagram. Please locate all of them and prepare them for use.

Note:

Ensure all hardware components are accounted for before beginning assembly. Missing or damaged hardware should be reported to customer service for replacement.

Email : **service@grandtunnel.com**

Step 10 Drawer Section

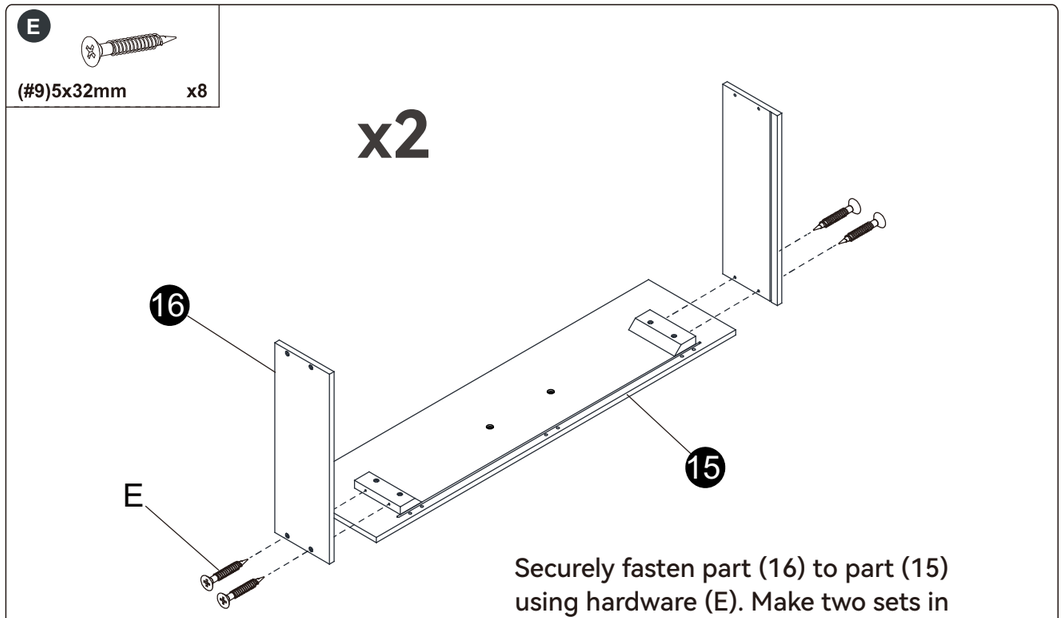

Securely fasten part (16) to part (15) using hardware (E). Make two sets in total.

Step 11 Drawer Section

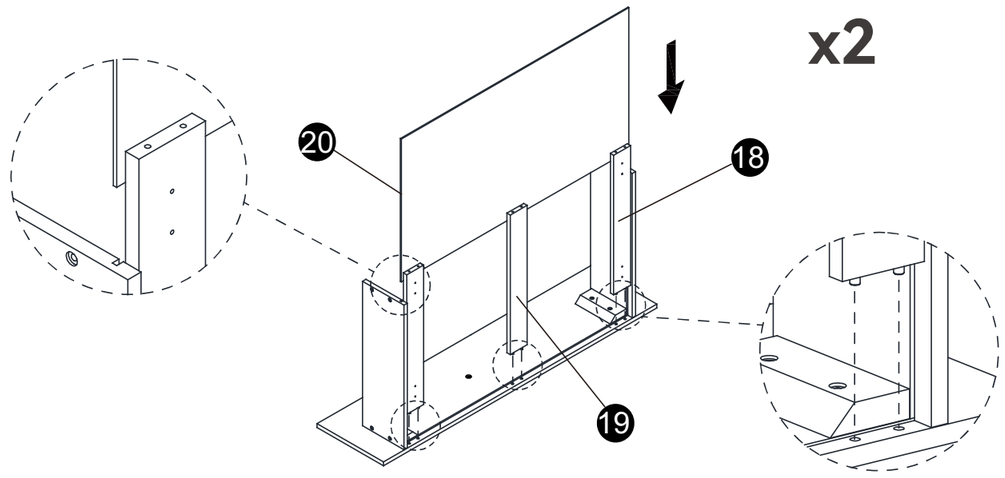

Install parts (20), (18), and (19) separately as required. Make two sets in total.

Email : **service@grandtunnel.com**

Step 12 Drawer Section

E (#9)5x32mm x20

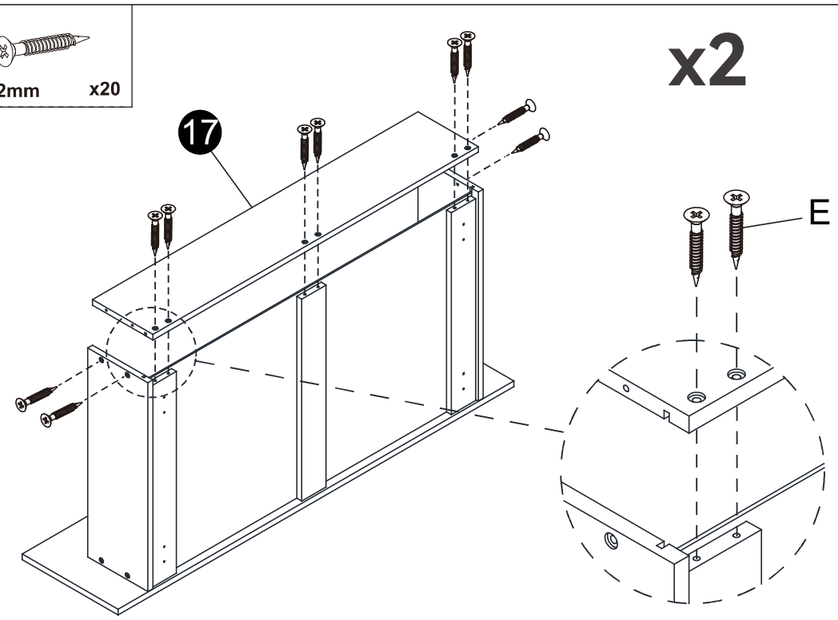

Secure part (17) using hardware (E).
Make two sets in total.

Step 13 Drawer Section

H Φ25xH30mm x8

I (#7)x12mm x16

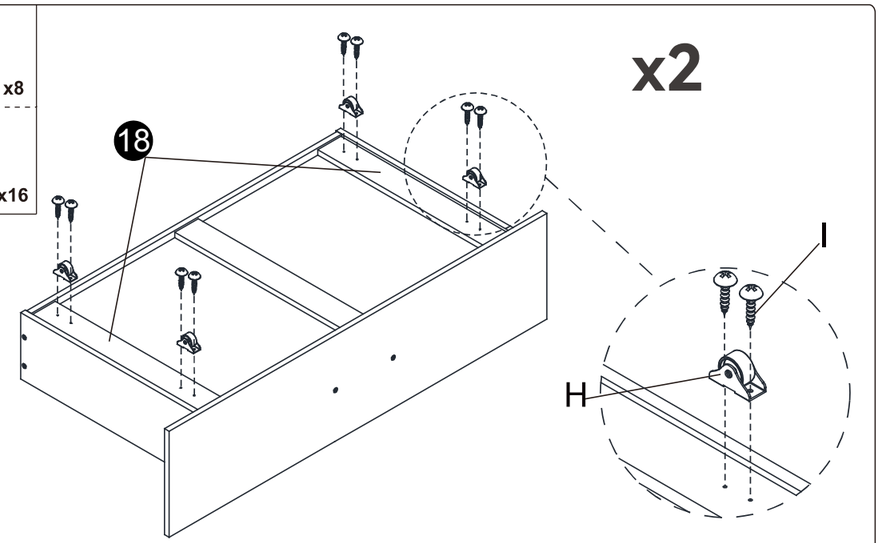

Install part (H) at the bottom using hardware (I). Make two sets in total.

Email : **service@grandtunnel.com**

EN

Step 14 Drawer Section

F 137x25x16mm x2

G 5/32x22mm x4

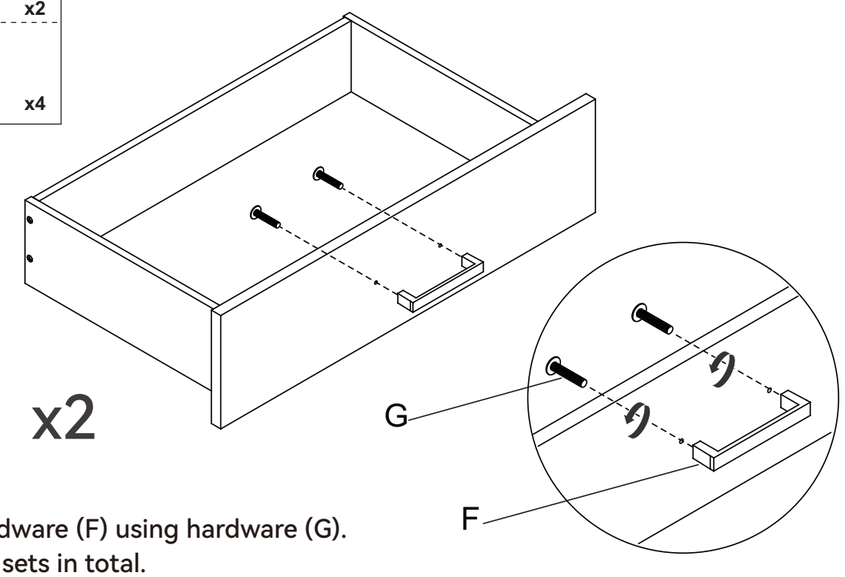

Install hardware (F) using hardware (G).
Make two sets in total.

Step 15 Drawer Section

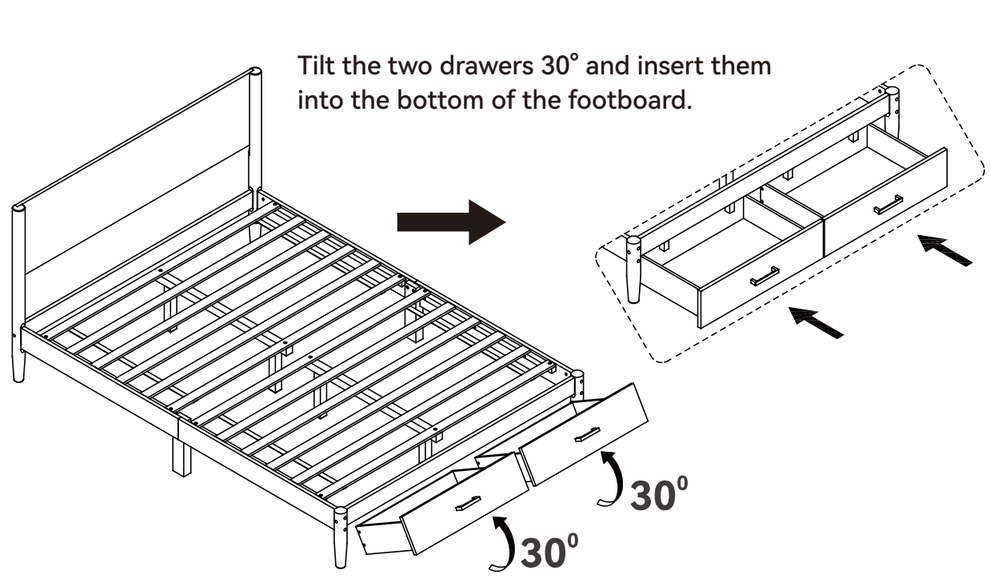

Email : **service@grandtunnel.com**

Step 16 Frame Parts Section

J

Φ14.5x10mm x8

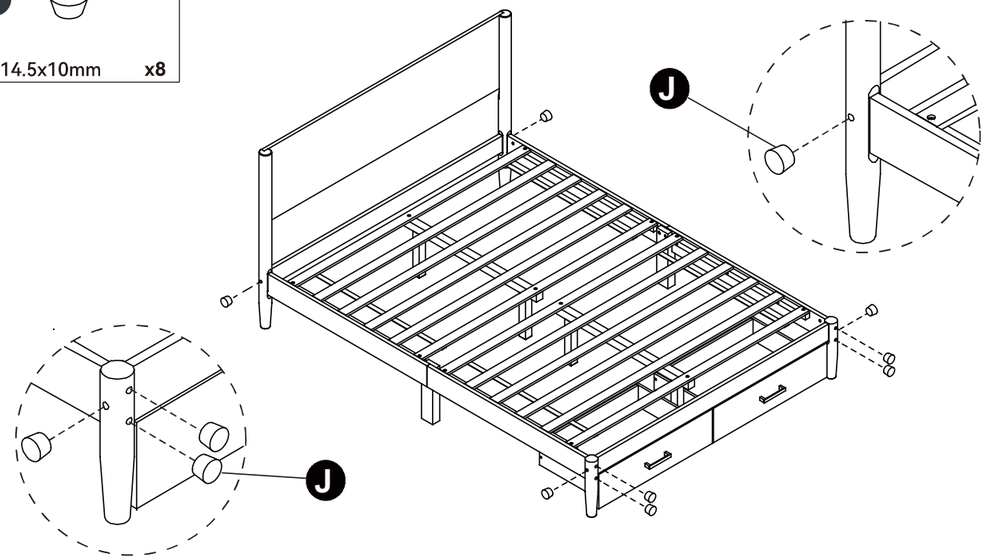

Insert hardware (J) into each screw hole.

Step 17 Frame Parts Section

K

Φ30x13mm x4

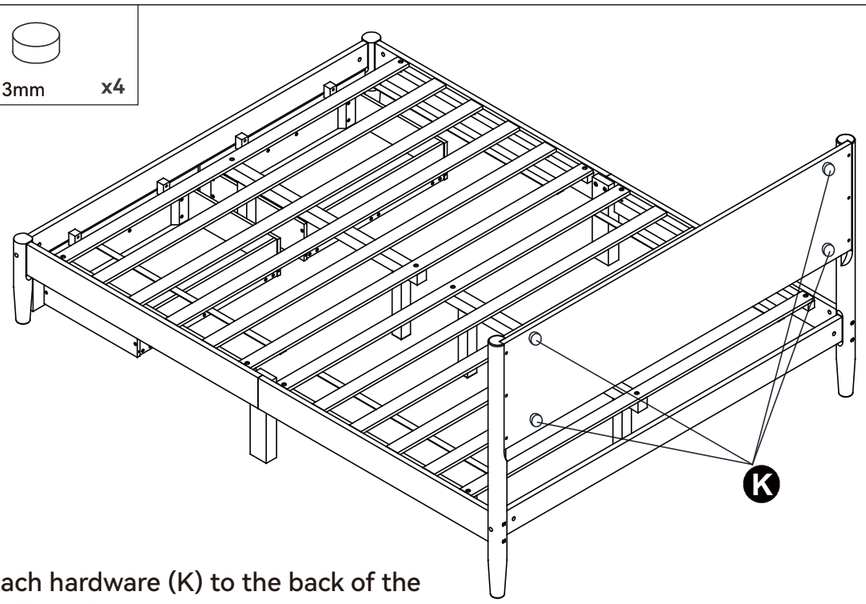

Attach hardware (K) to the back of the headboard.

Email : **service@grandtunnel.com**

Step 18 Frame Parts Section

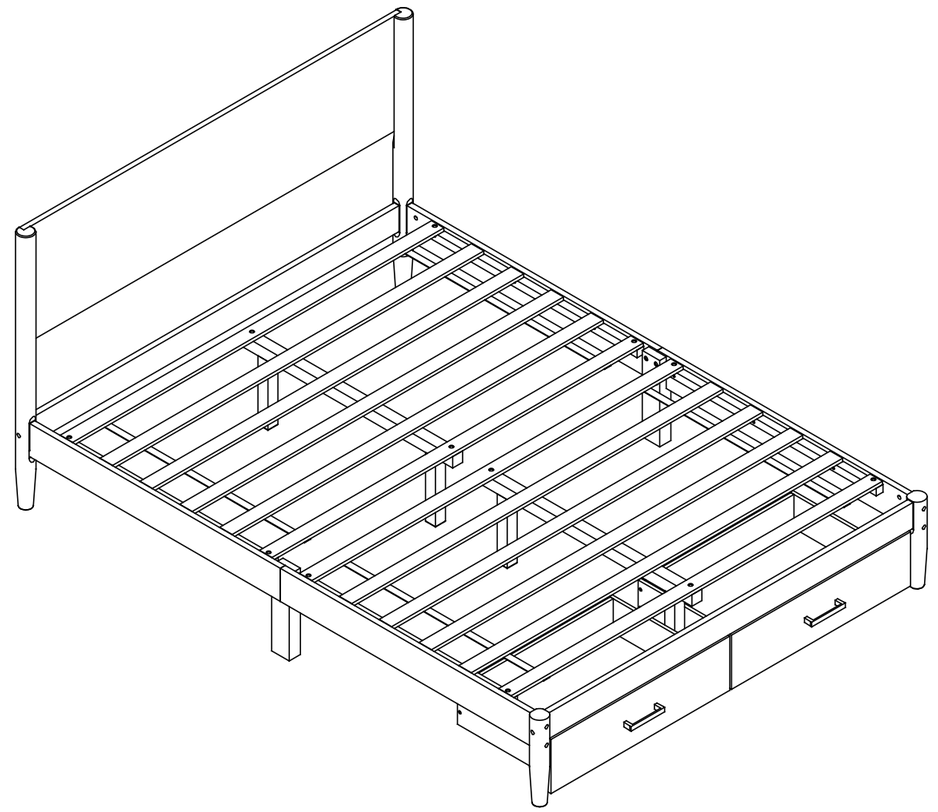

ASSEMBLY IS COMPLETED!

Email : **service@grandtunnel.com**

EN