Folding Sofa

SF138

Assembly Instructions

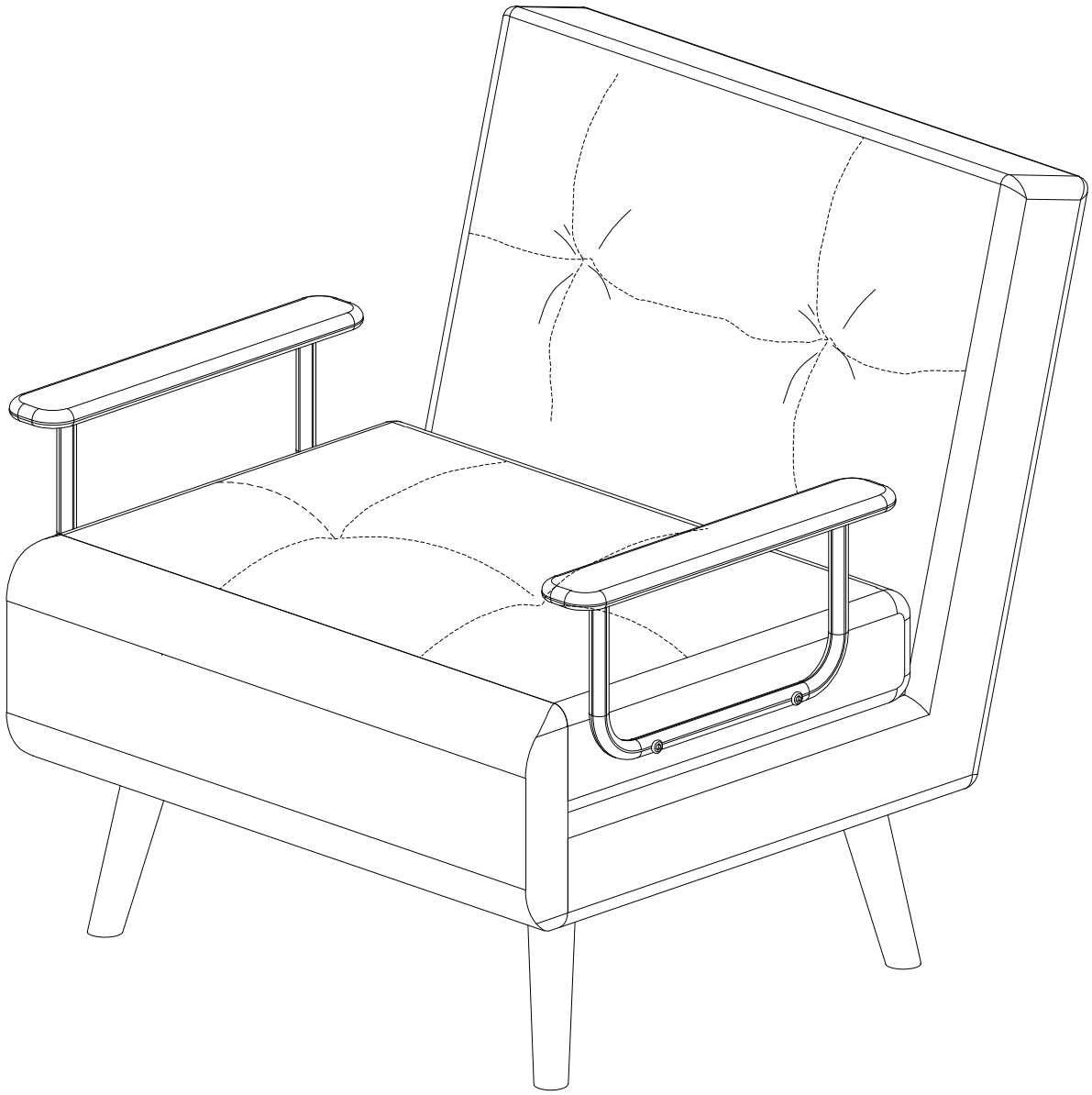

Assembly Overview

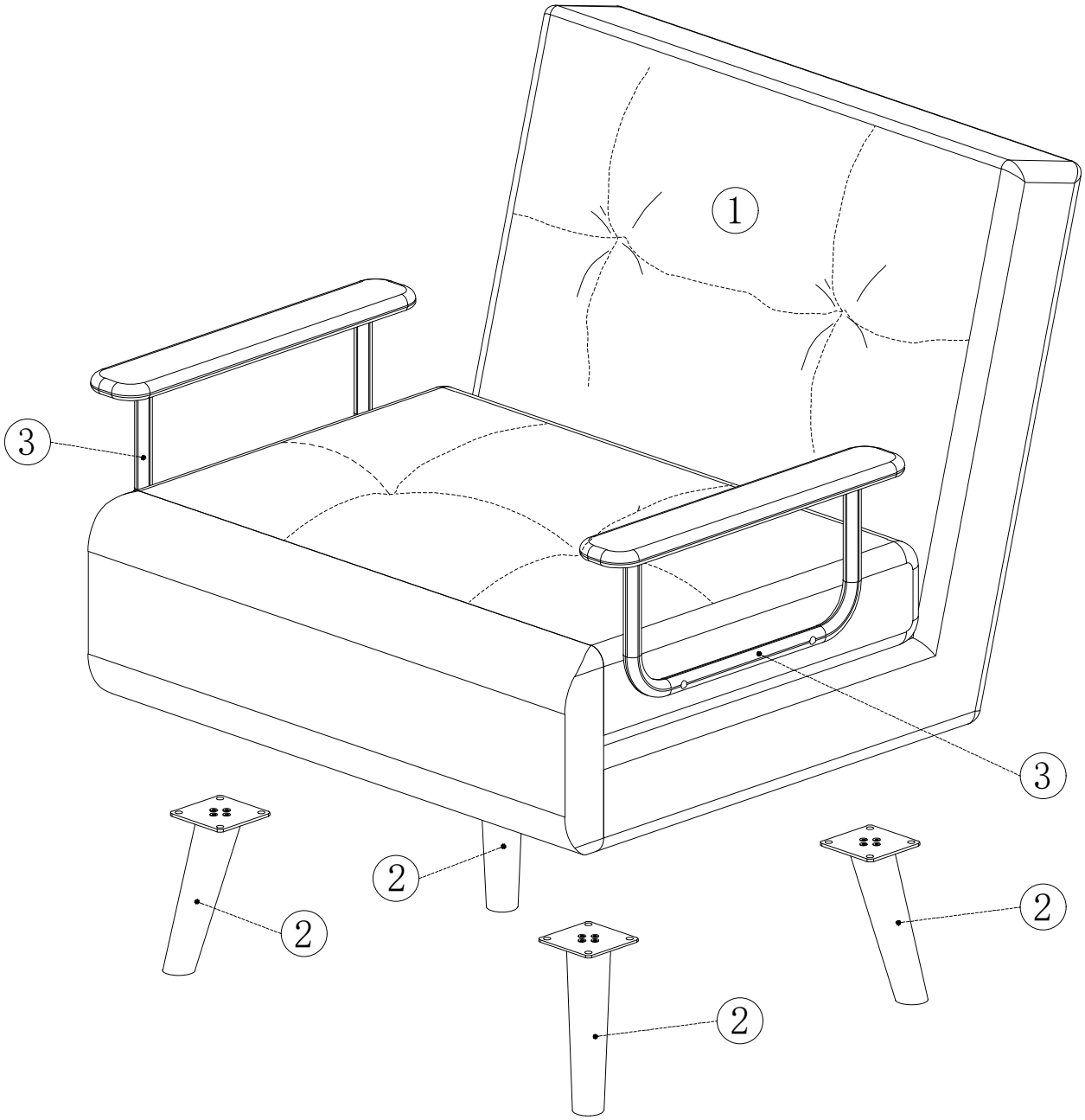

Parts List

1 Upholstered Body

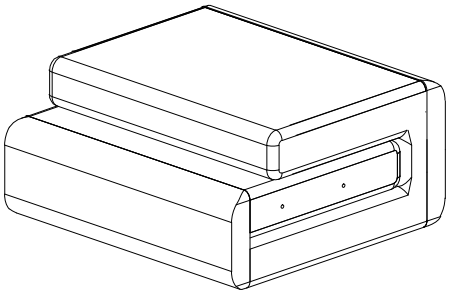

1 PC

2 Leg

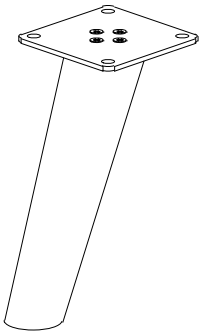

4 PCS

3 Armrest

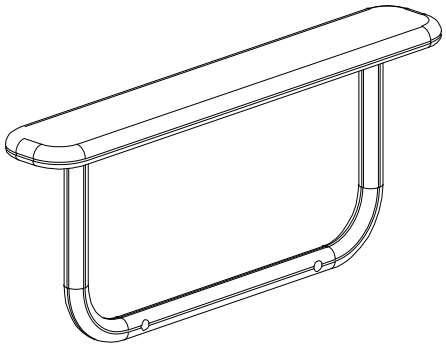

2 PCS

Hardware & Tools

A Hex Socket Bolt

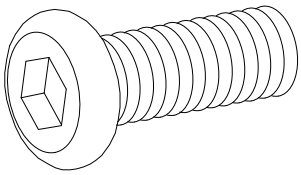

M8 × 25MM

16+1 PCS

B Flat Washer

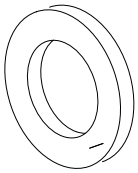

M8 × outer Ø19MM

16+1 PCS

C Hex Key

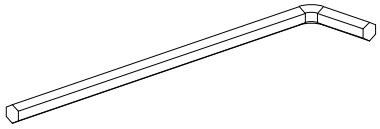

M5 × 70MM

1 PC

Tool - reuse as needed

D Flange-Head Hex Socket Bolt

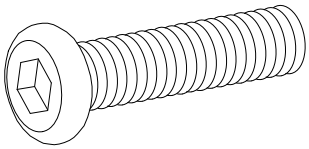

M8 × 60MM

4+1 PCS

E Hex Key

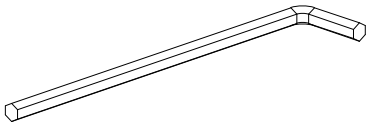

M6 × 90MM

1 PC

Tool - reuse as needed

Important Notice

Use the correct screw size to help prevent damage to the wooden components.

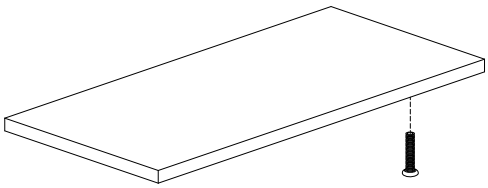

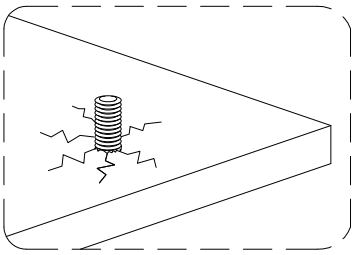

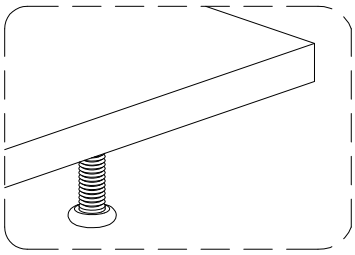

Example

Incorrect: screws may split the wood.

Correct: use screws of the correct size.

Step 1

Attach the four legs 2 to upholstered body 1 using bolts A and washers B. Tighten with hex key C.
Pay attention to the installation direction of the legs.

Bolts: A × 16; washers: B × 16. Tool: C.

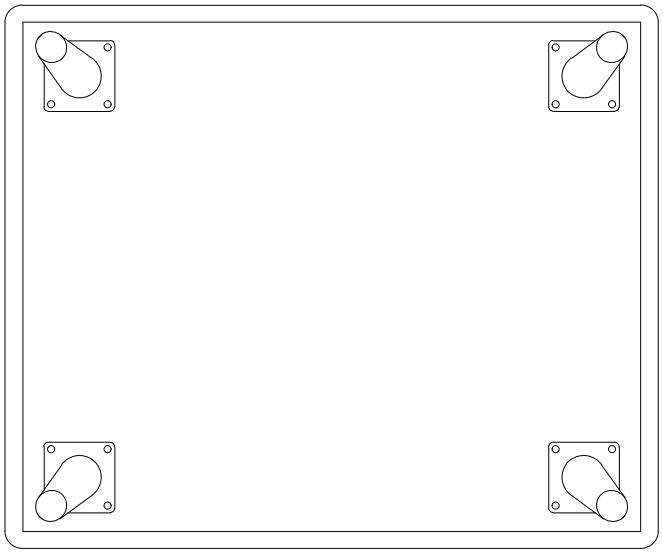

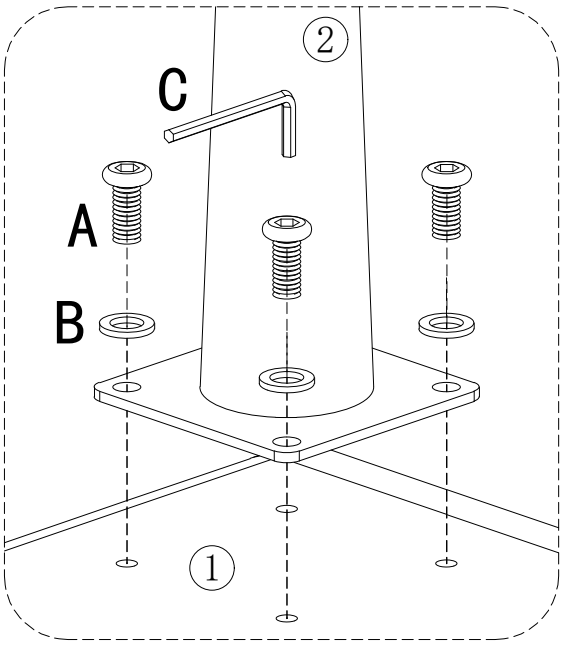

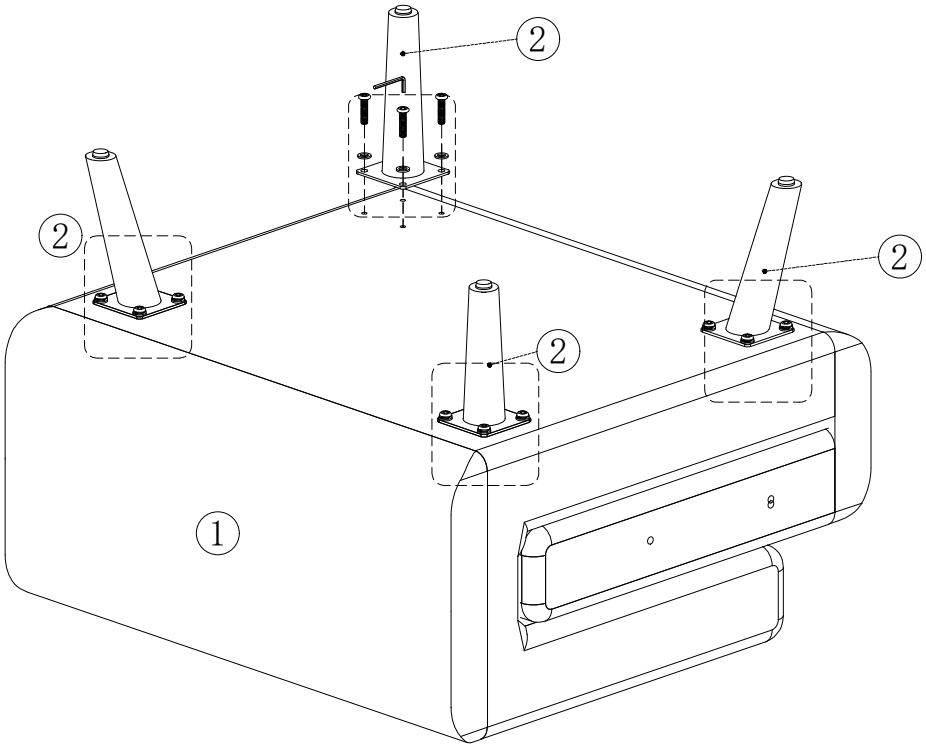

Step 2

Unfold the assembly from Step 1 as shown.

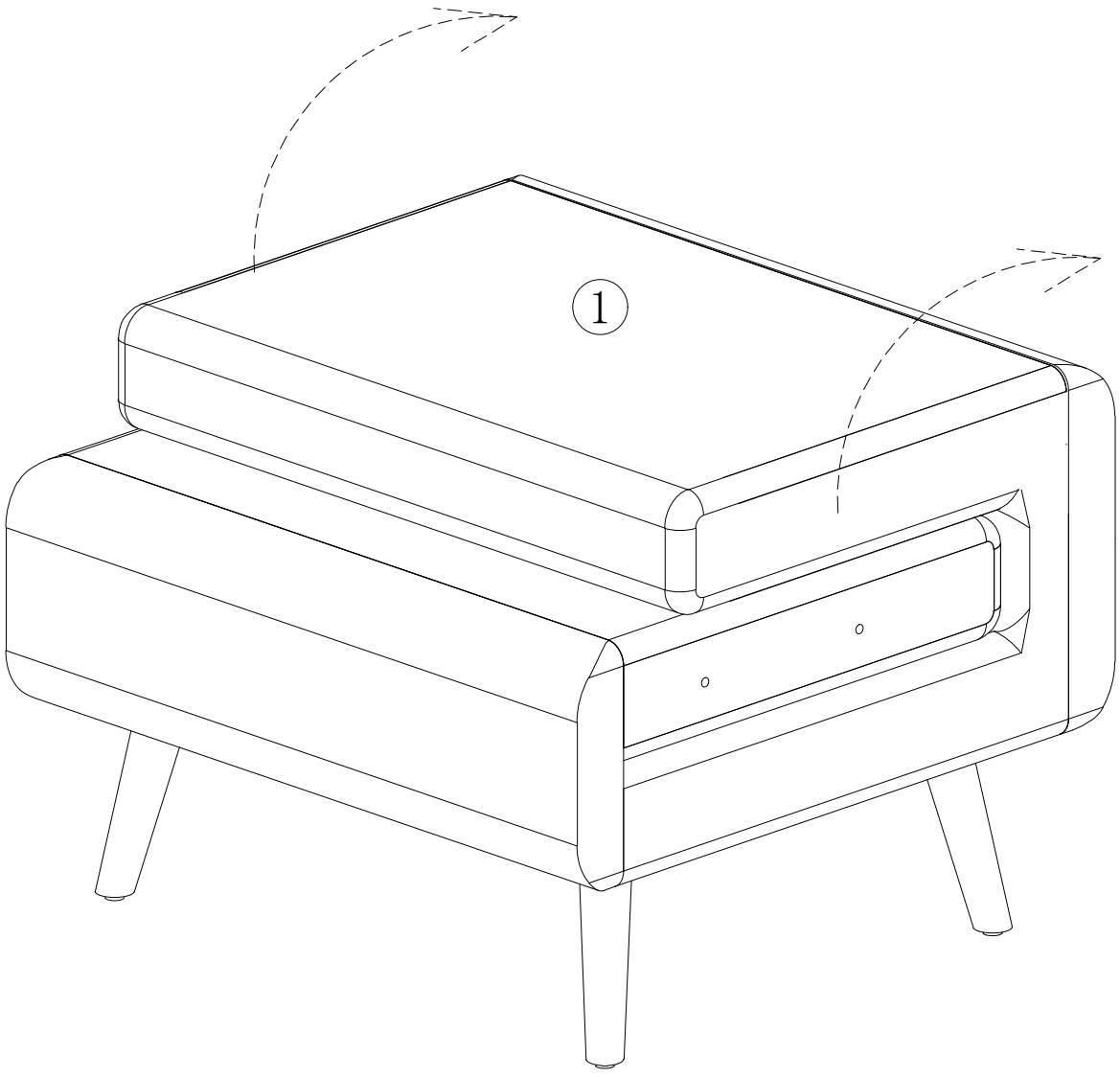

Step 3

Attach armrests 3 to the unfolded assembly using bolts D.
Tighten with hex key E, as shown.

Bolts: D × 4. Tool: E.

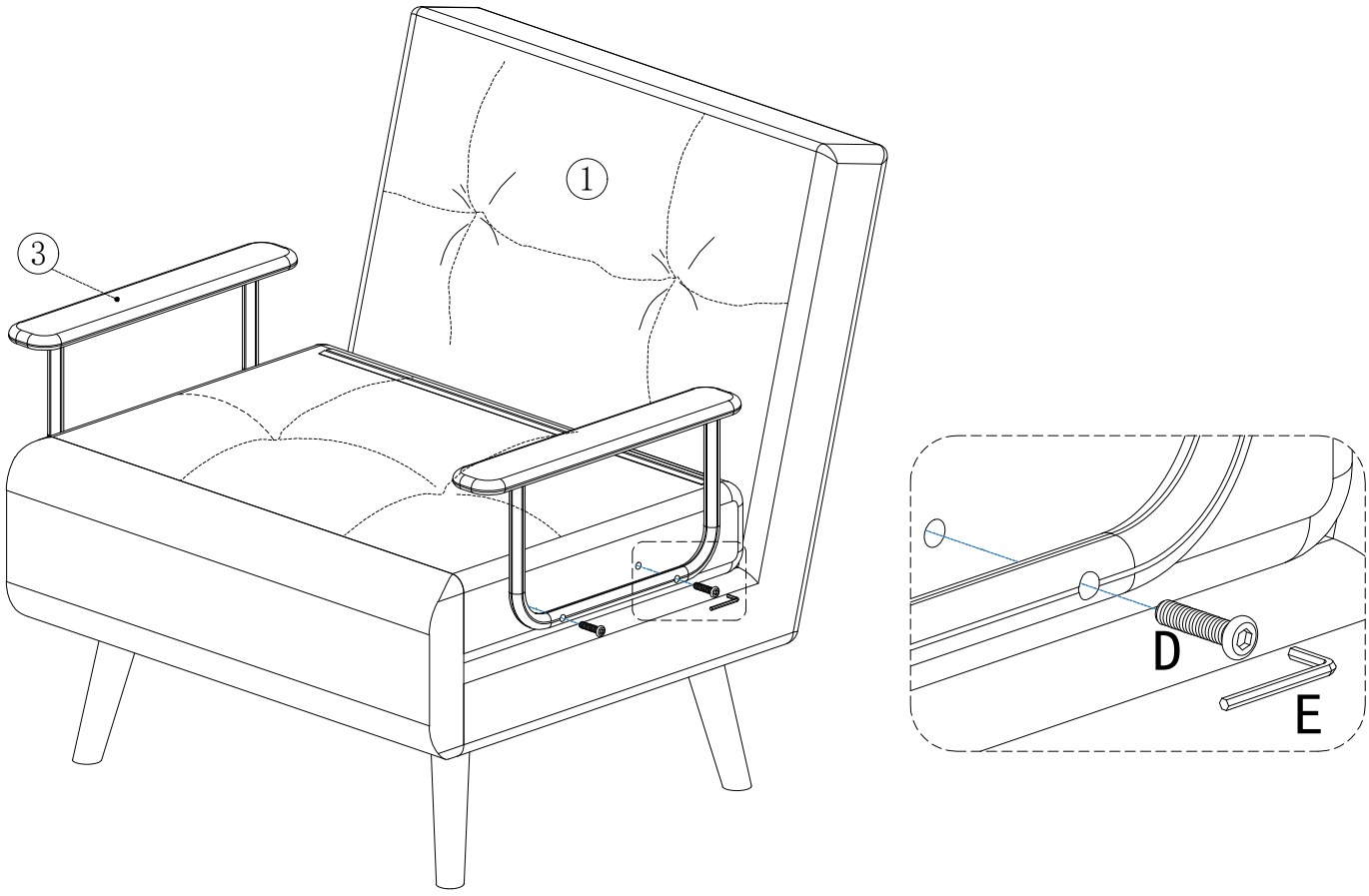

Step 4

Normal Use

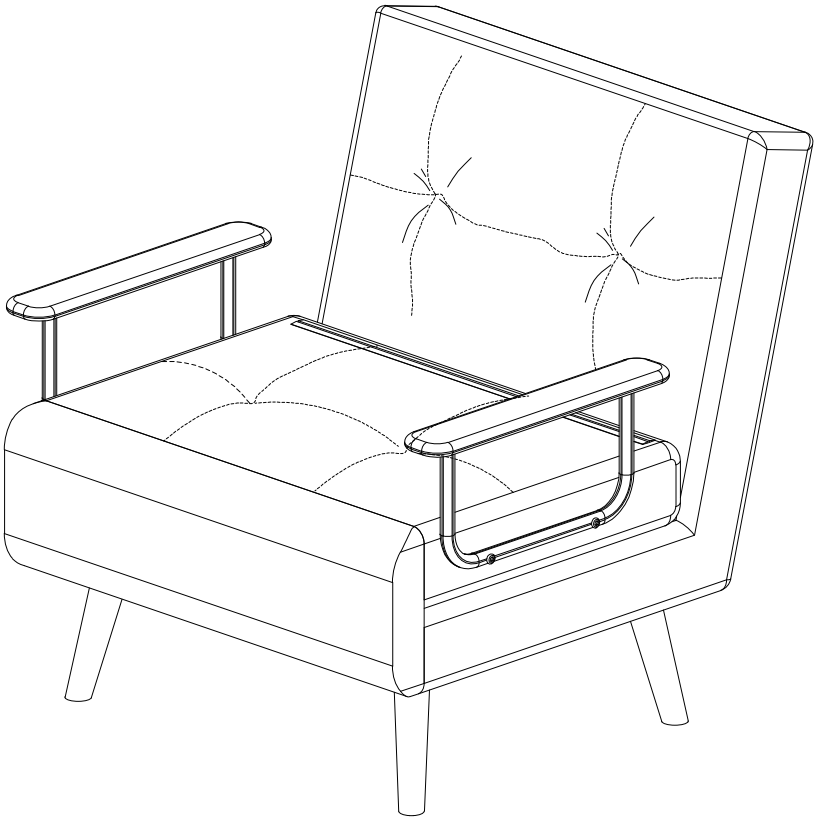

Partially Unfolded

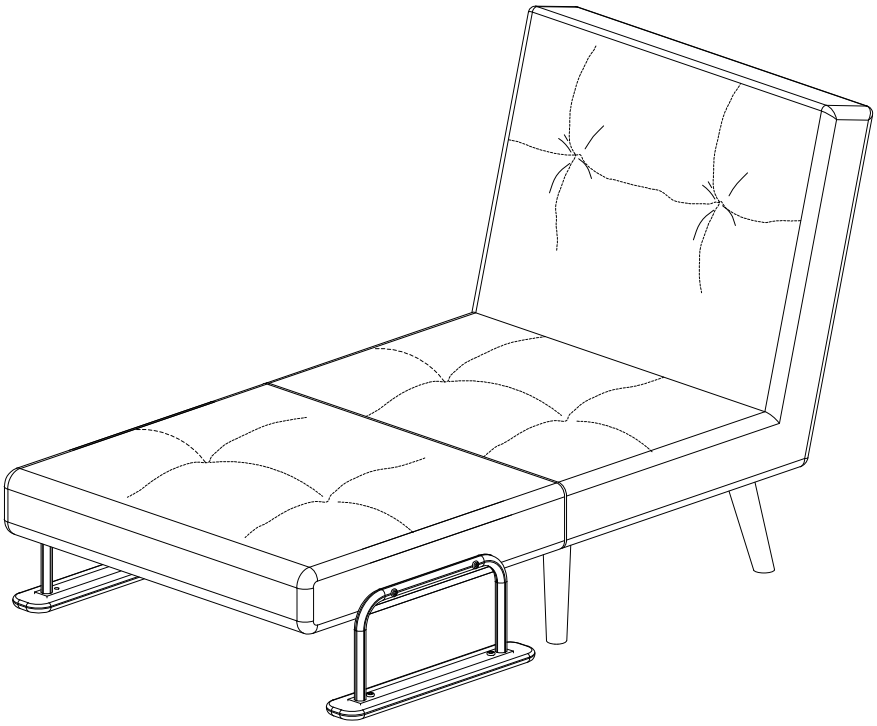

Step 5

Open the zipper at the back of the backrest, then unfold the hidden support legs.

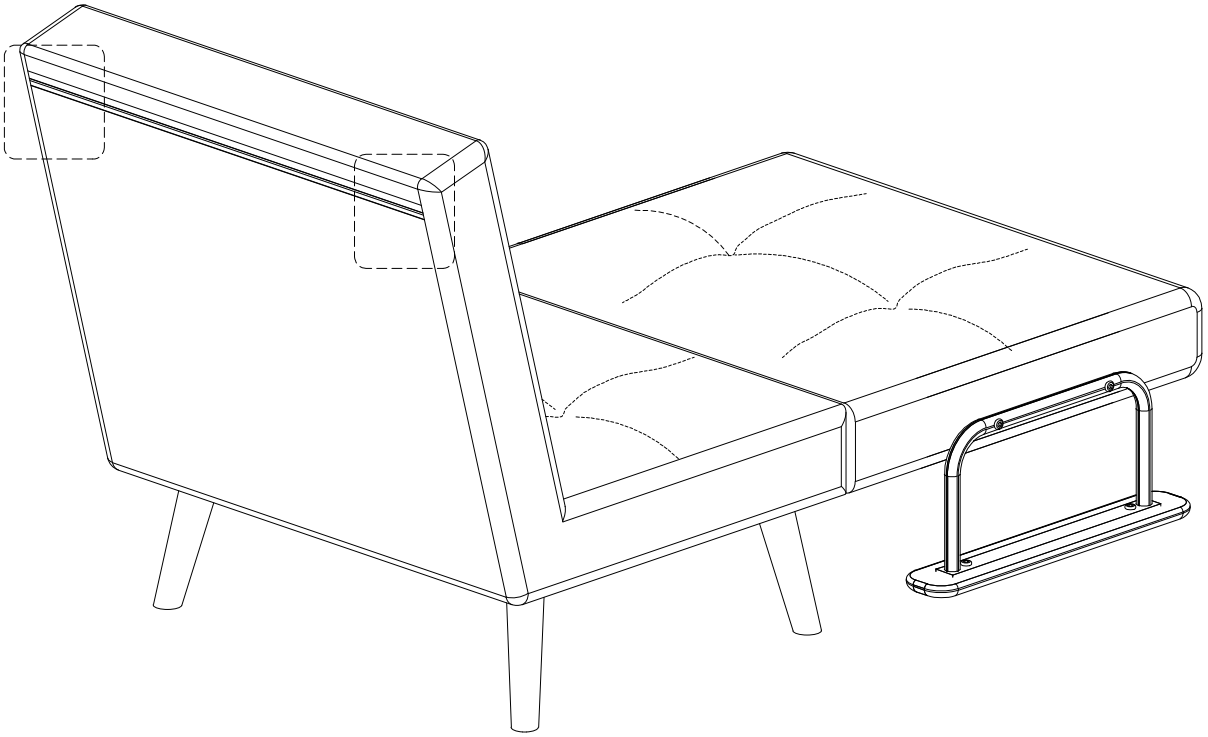

Lay the backrest down, as shown.

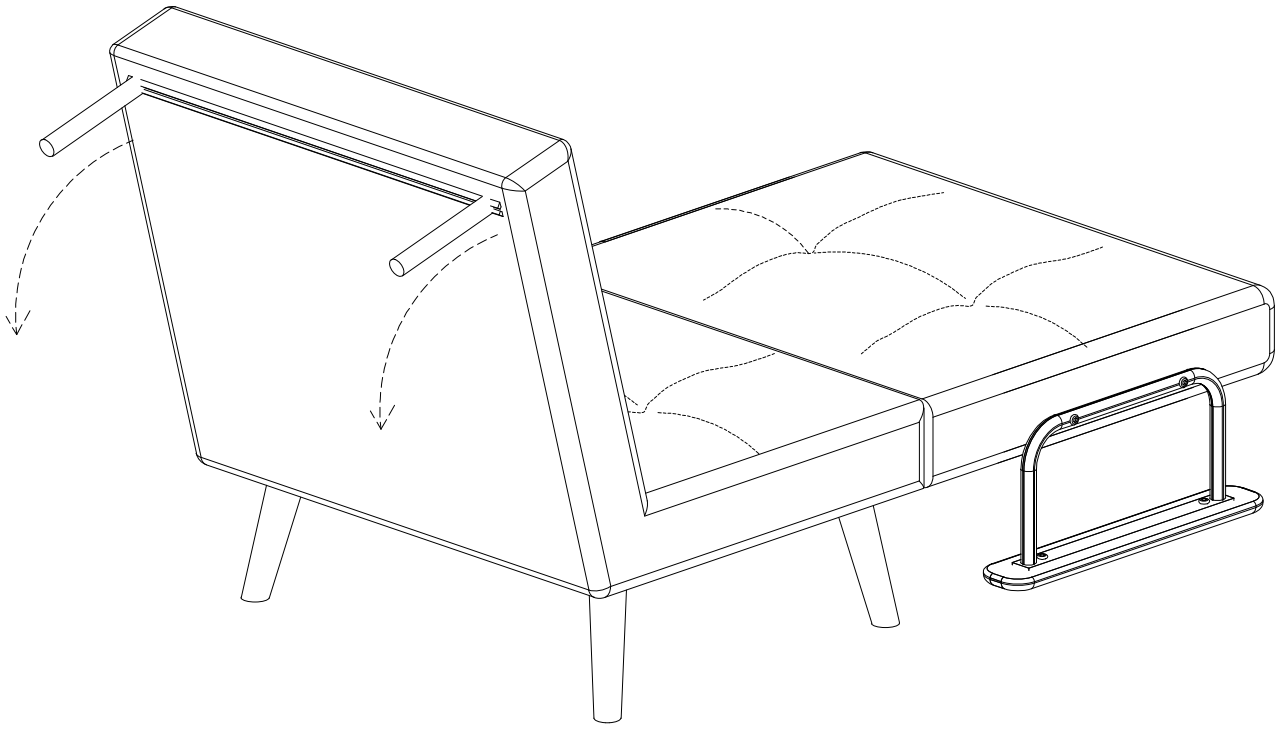

Step 6

Fully Unfolded

