I870101607

Note: Packages may not arrive at the same time
Do not open until all packages are received.

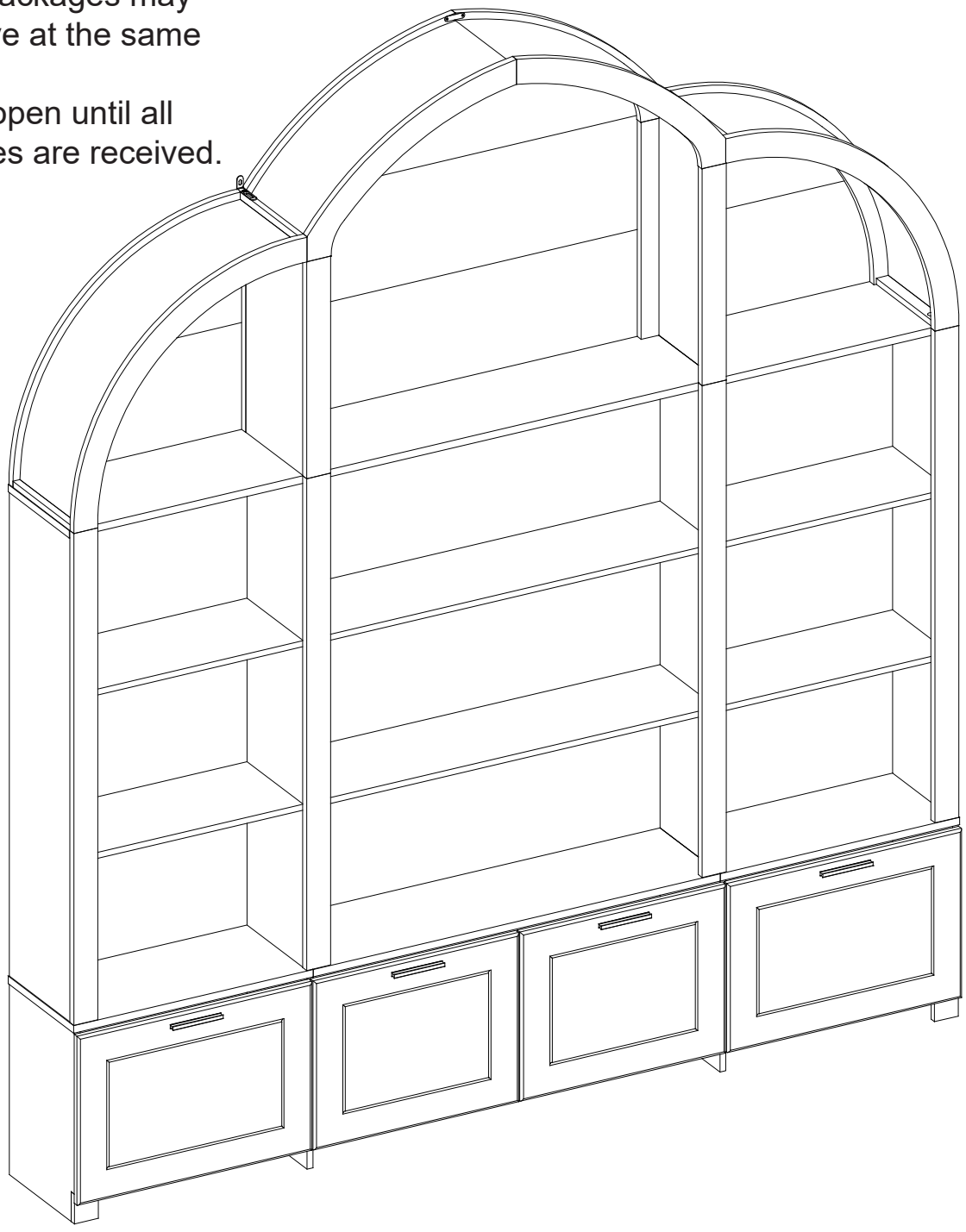

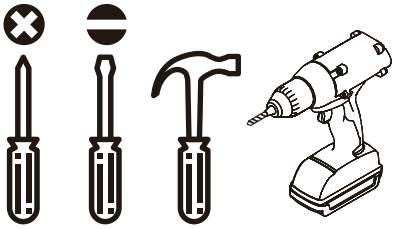

Tools required
(not included)



2 people for assembly

Safety and Care Advice

Important – Please read these instructions fully before starting assembly

• Check you have all the components and tools listed on the following pages.

• Remove all fittings from the plastic bags and separate them into their groups.

• Keep children and animals away from the work area, small parts could choke if swallowed.

• Make sure you have enough space to layout the parts before starting.

• During assembly do not stand or put weight on the product, this could cause damage.

• Assemble the item as close to its final position (in the same room) as possible.

• Assemble on a soft level surface to avoid damaging the unit or your floor.

• Parts of the assembly will be easier with 2 people.

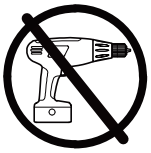

• To reduce the likelihood of damaging your product please ensure that your power drill is set on a low torque setting.

Care and maintenance

• Only clean using a damp cloth and mild detergent, do no use bleach or abrasive cleaners.

• From time to time check that there are no loose screws on this unit.

• This product should not be discarded with household waste. Take to your local authority waste disposal centre.

Handy Hints

• Assemble all parts and bolts loosely during assembly, only once the product is complete should you fully tighten the bolts

• Regularly check and ensure That all bolts and fittings are tightend properly.

WARNING
In order to help prevent overturning – please follow these instructions

To help prevent product toppling over please follow the below steps:-

Use the anti tip stap or wall fixing method provided (if applicable)
Do not allow children to climb or hang on the furniture
Do not open more than one drawer at a time
Do not place heavy items in the top drawers
Do not place heavy items on top of the furniture, unless the furniture has been designed for this purpose

please note that only the anti tip strap is provided.
You will need to provide wall plugs and screws applicable for your wall type

Using Camlocks

Step 1

Connect the male camlock as diected in the assembly instructions using a scewdriver.

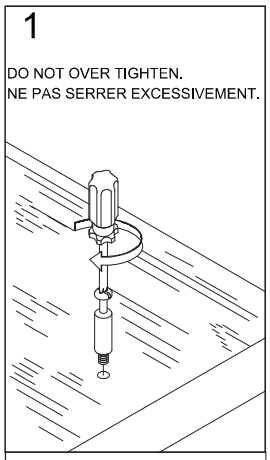

Step 2

Push the male camlock into the entry hole.

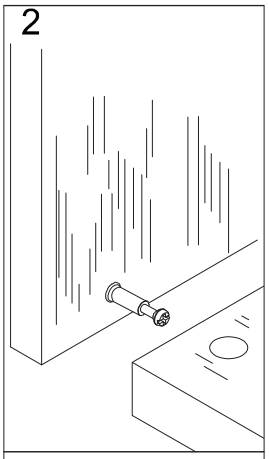

Step 3

Insert the femle camlock as shown in the instruction.

Note：ensure that the arrow on the top of the camlock points towards the entry hole for the male camlock.

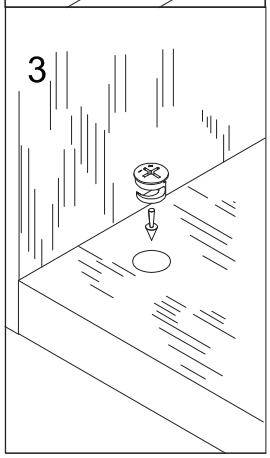

Step 4

Turn the female camlock clockwise with a screwdriver.

You should feel a click when the camlock is locked in place.

The joint is now secure.

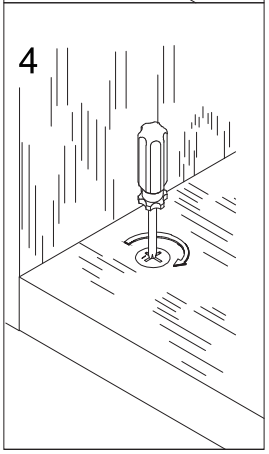

⚠WARNING





Children have died from furniture tipover.
To reduce the risk of furniture tipover:

- ALWAYS install tipover restraint provided.
- NEVER put a TV on this product.
- NEVER allow children to stand, climb or hang on drawers, doors, or shelves.
- NEVER open more than one drawer at a time.
- Place heaviest items in the lowest drawers.

This is a permanent label.
Do not remove!

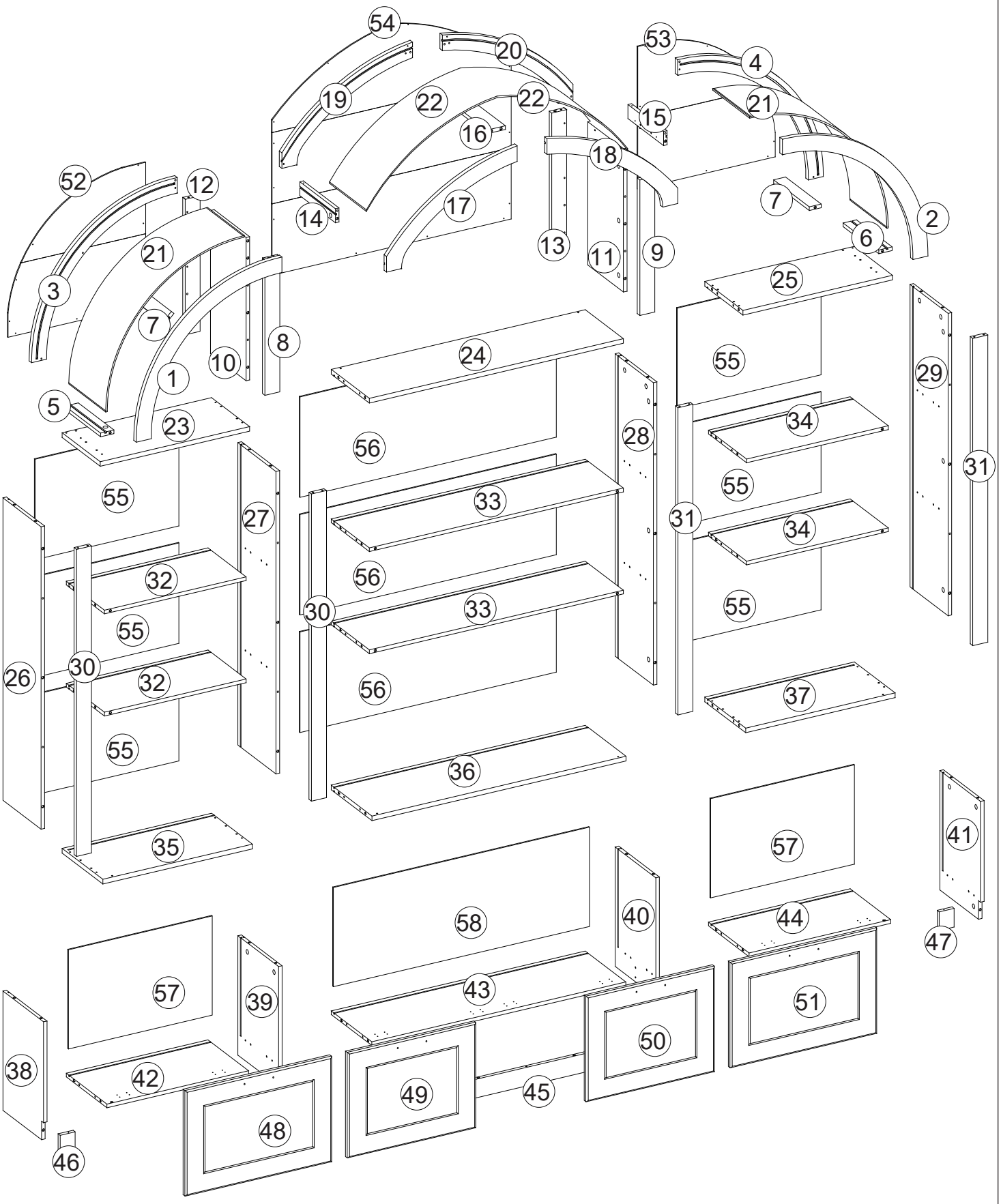
54
20
53
4
19
22
22
15
21
16
18
52
12
14
17
7
2
21
13
11
9
6
3
25
7
8
24
55
29
10
1
5
23
56
28
34
31
55
27
33
31
34
32
56
30
33
55
55
26
30
32
56
37
55
36
35
57
41
58
40
44
47
57
39
43
51
50
38
42
49
45
48
46

Parts List

1 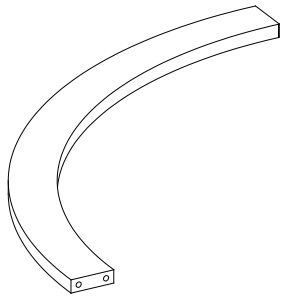 x1	2 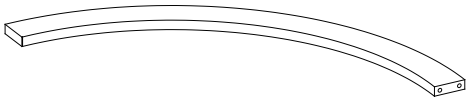 x1	3 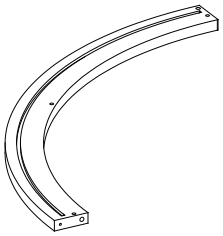 x1
4  x1	5 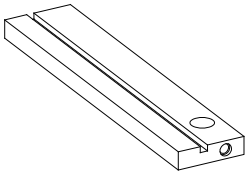 x1	6 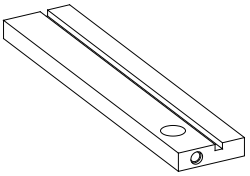 x1
7 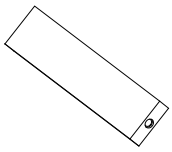 x2	8 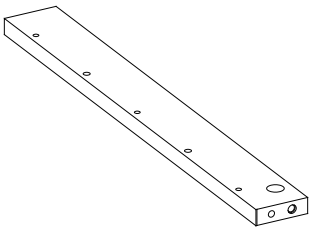 x1	9 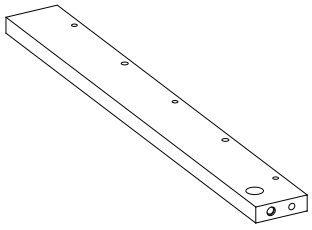 x1
10 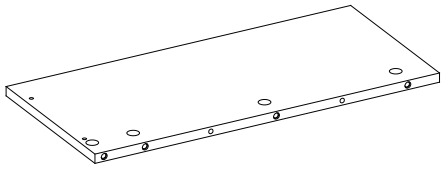 x1	11 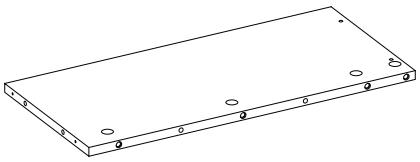 x1	12 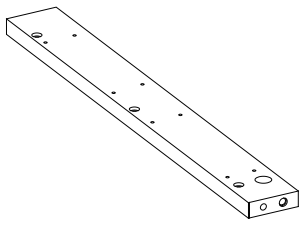 x1
13 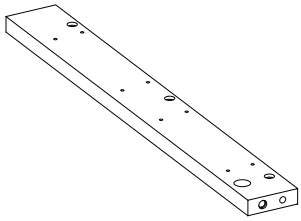 x1	14 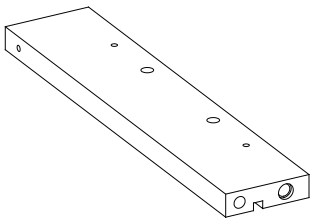 x1	15 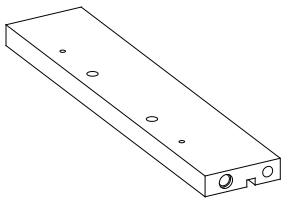 x1
16 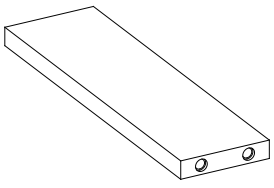 x1	17 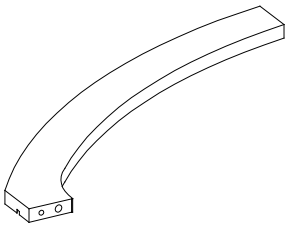 x1	18  x1

Parts List

19 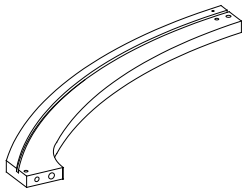 x1	20  x1	21 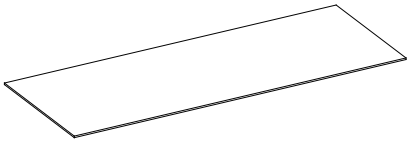 x2
22 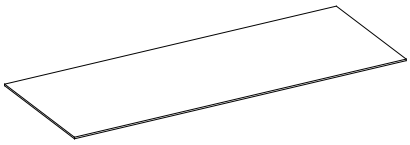 x1	23 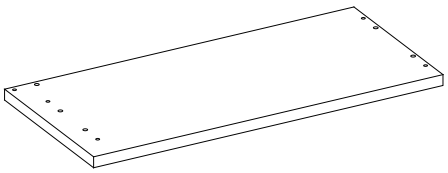 x1	24 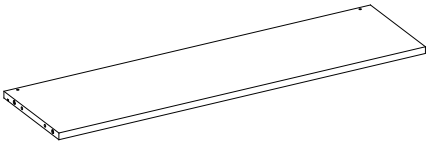 x1
25 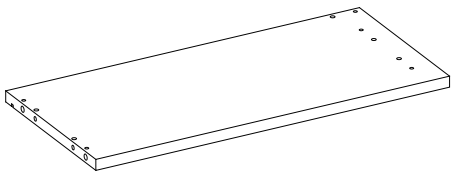 x1	26 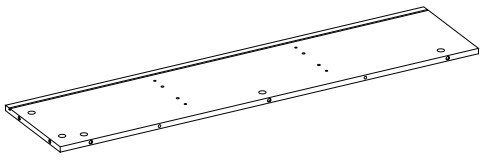 x1	27 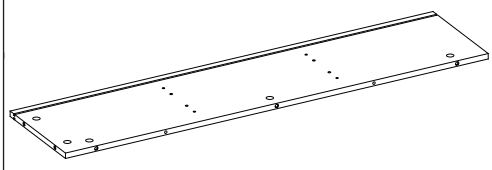 x1
28 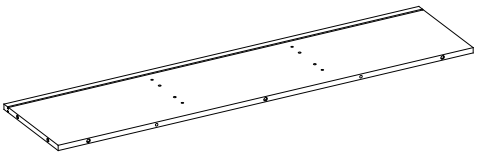 x1	29 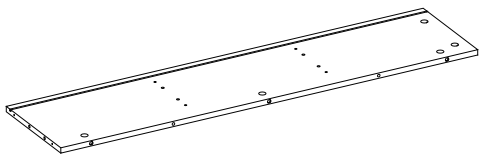 x1	30 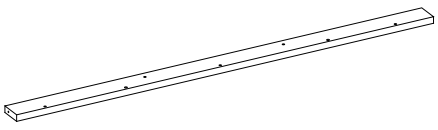 x2
31 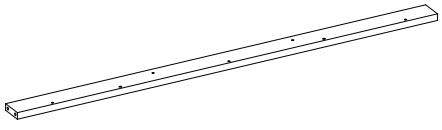 x2	32 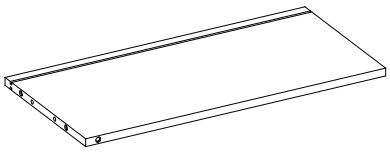 x2	33 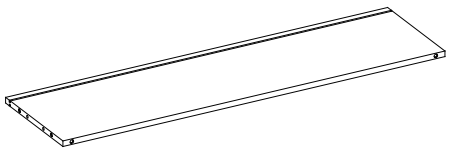 x2
34 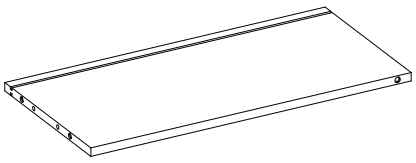 x2	35 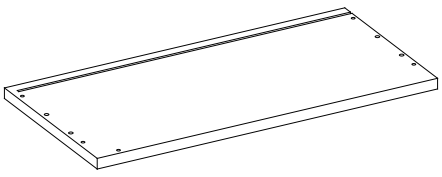 x1	36 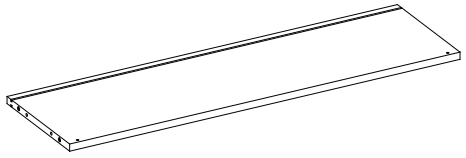 x1

Parts List

37

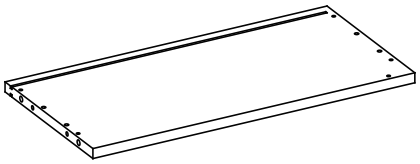

x1

38

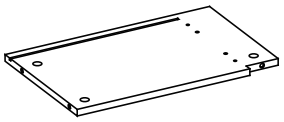

x1

39

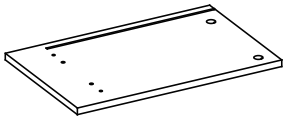

x1

40

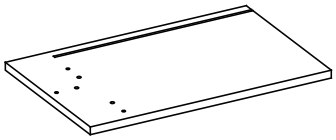

x1

41

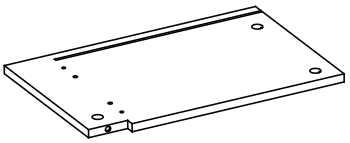

x1

42

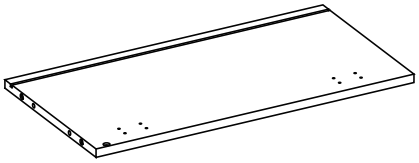

x1

43

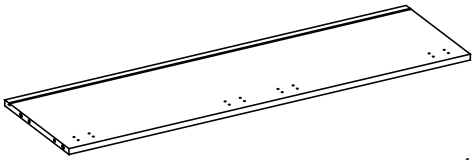

x1

44

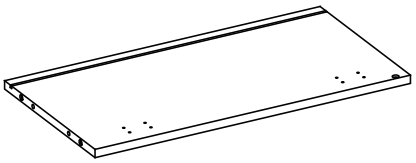

x1

45

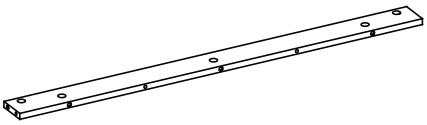

x1

46

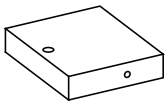

x1

47

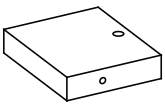

x1

48

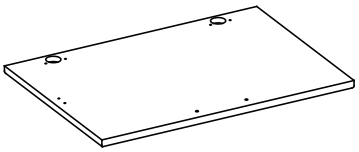

x1

49

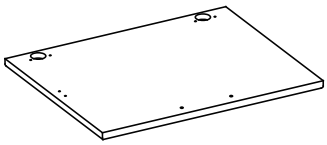

x1

50

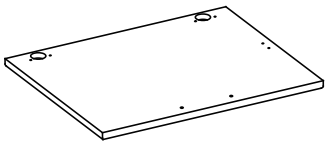

x1

51

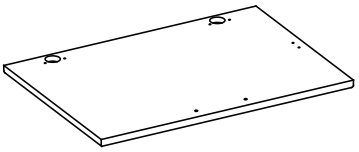

x1

52

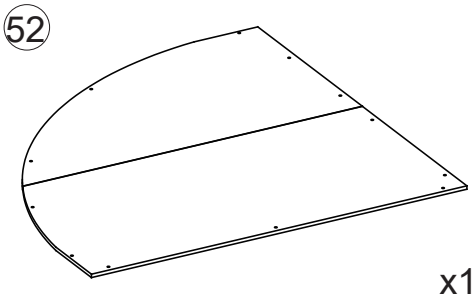

x1

53

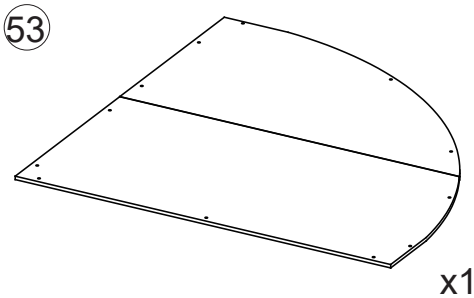

x1

54

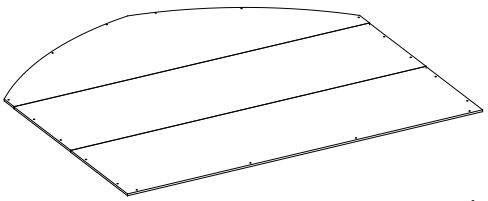

x1

Parts List

55 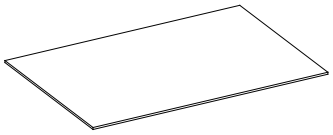 x6	56 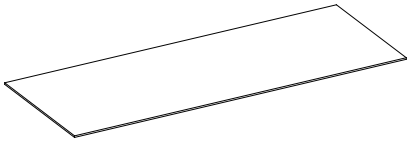 x3	57 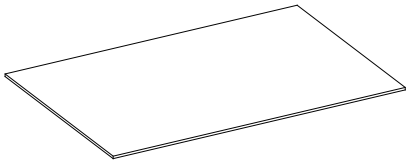 x2
58 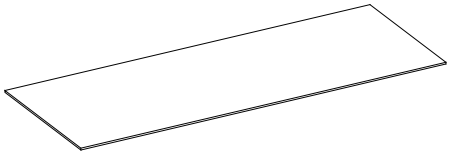 x1		

A x95+2 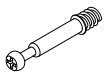 M6x35mm	B x107+2  Ø15x9mm	C x96+2  Ø6x30mm	D x12  M6x50mm	E x12 	F x8+1  Ø6x20mm	G x8  M4x20mm	H x40+1  M4x40mm
I x8 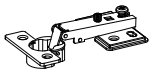	J x68+2  M3.5x12mm	K x2 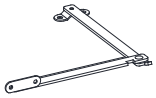	L x2 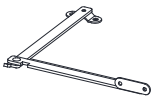	M x4 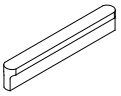	N x8  M4x16mm	O x42+2  M3x12mm	P x2 
Q x24+1 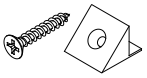	R x2 	S x2 	T x2 	U x8 			

1

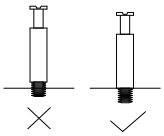

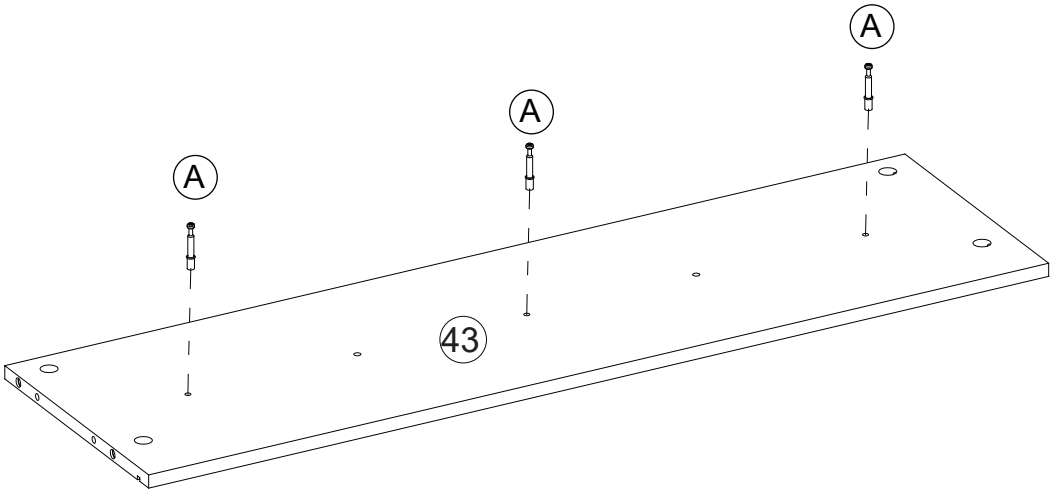

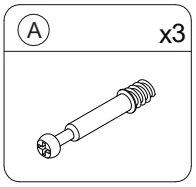

2

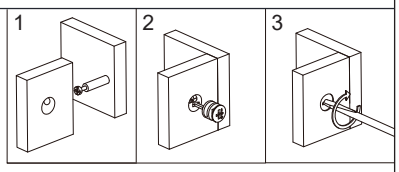

Cam Lock Fastening System

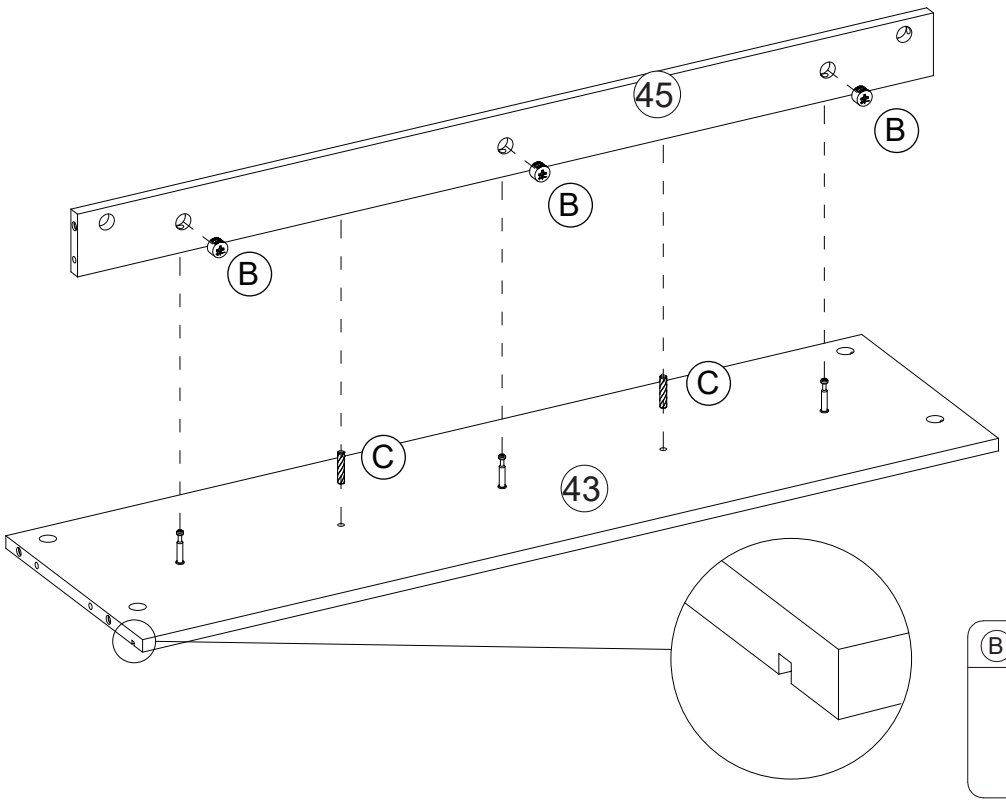

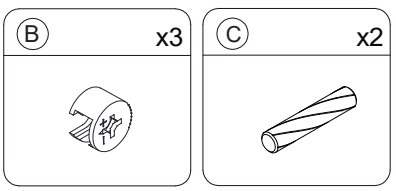

3

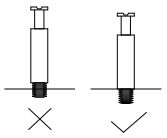

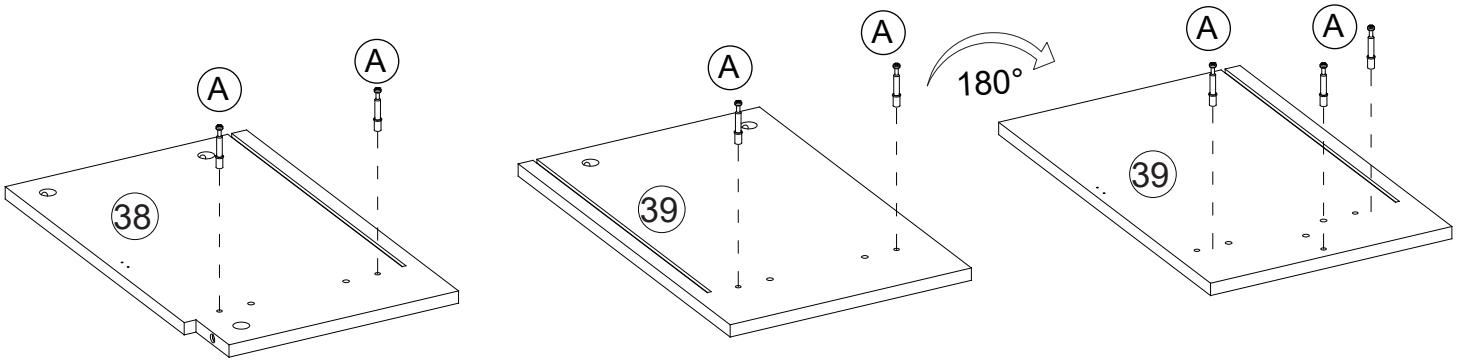

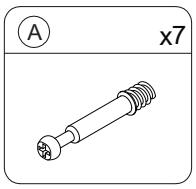

4

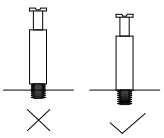

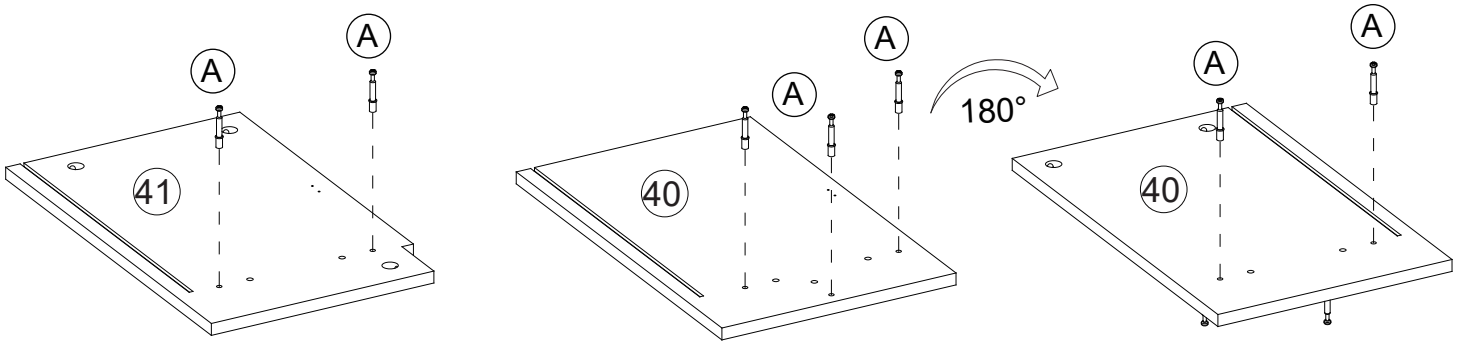

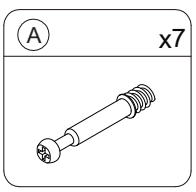

5

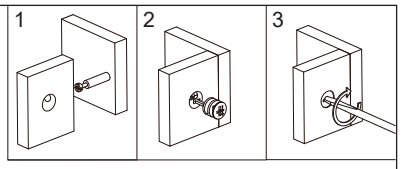

Cam Lock Fastening System

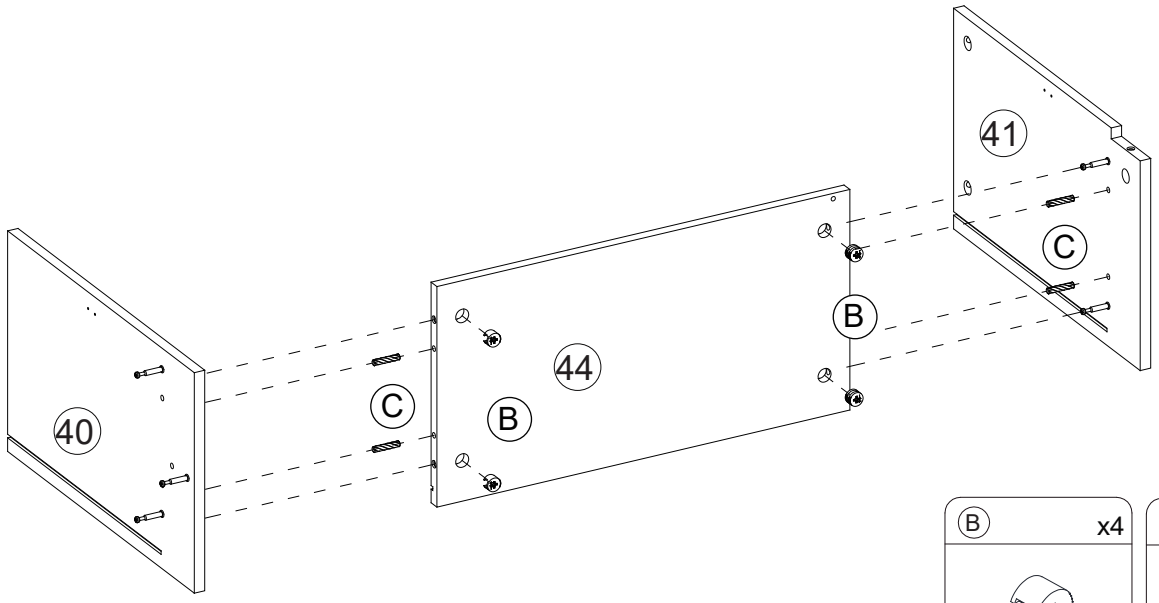

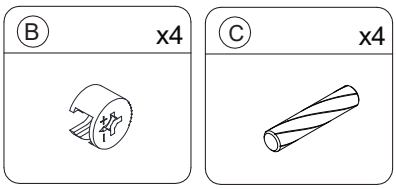

6

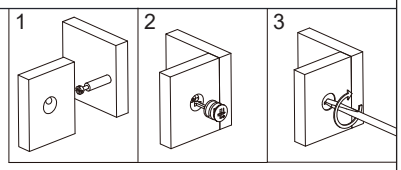

Cam Lock Fastening System

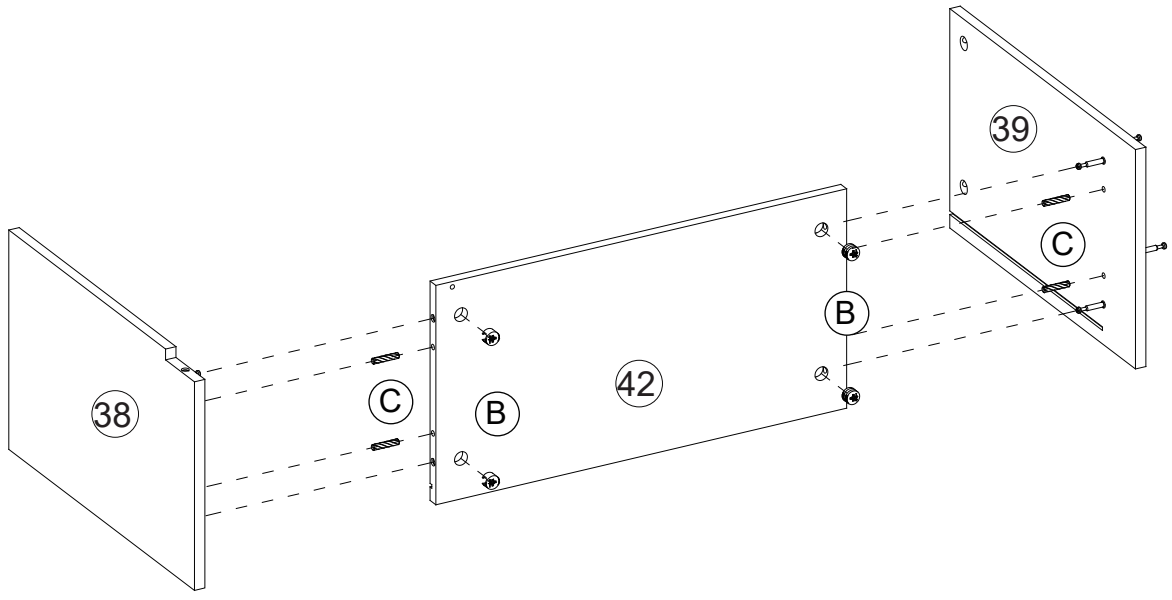

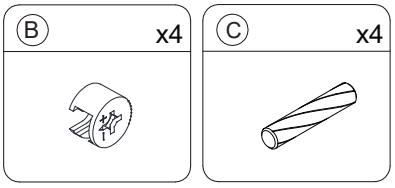

7

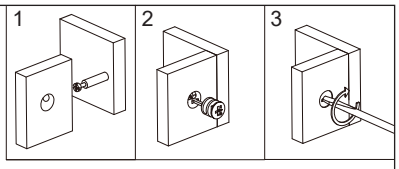

Cam Lock Fastening System

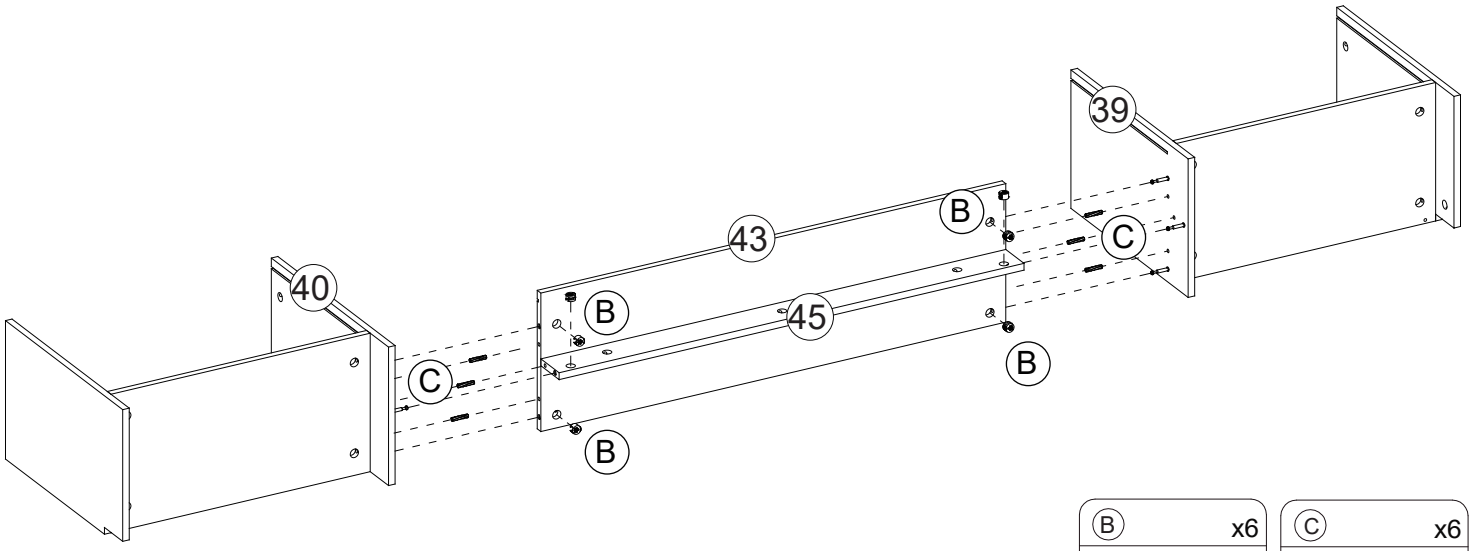

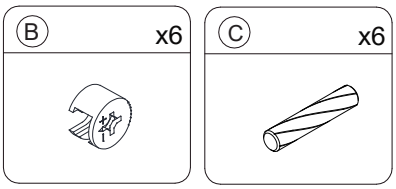

8

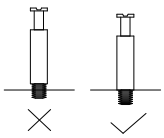

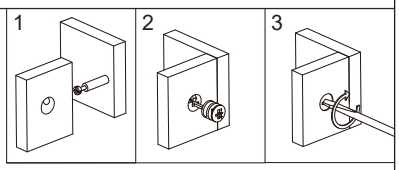

Cam Lock Fastening System

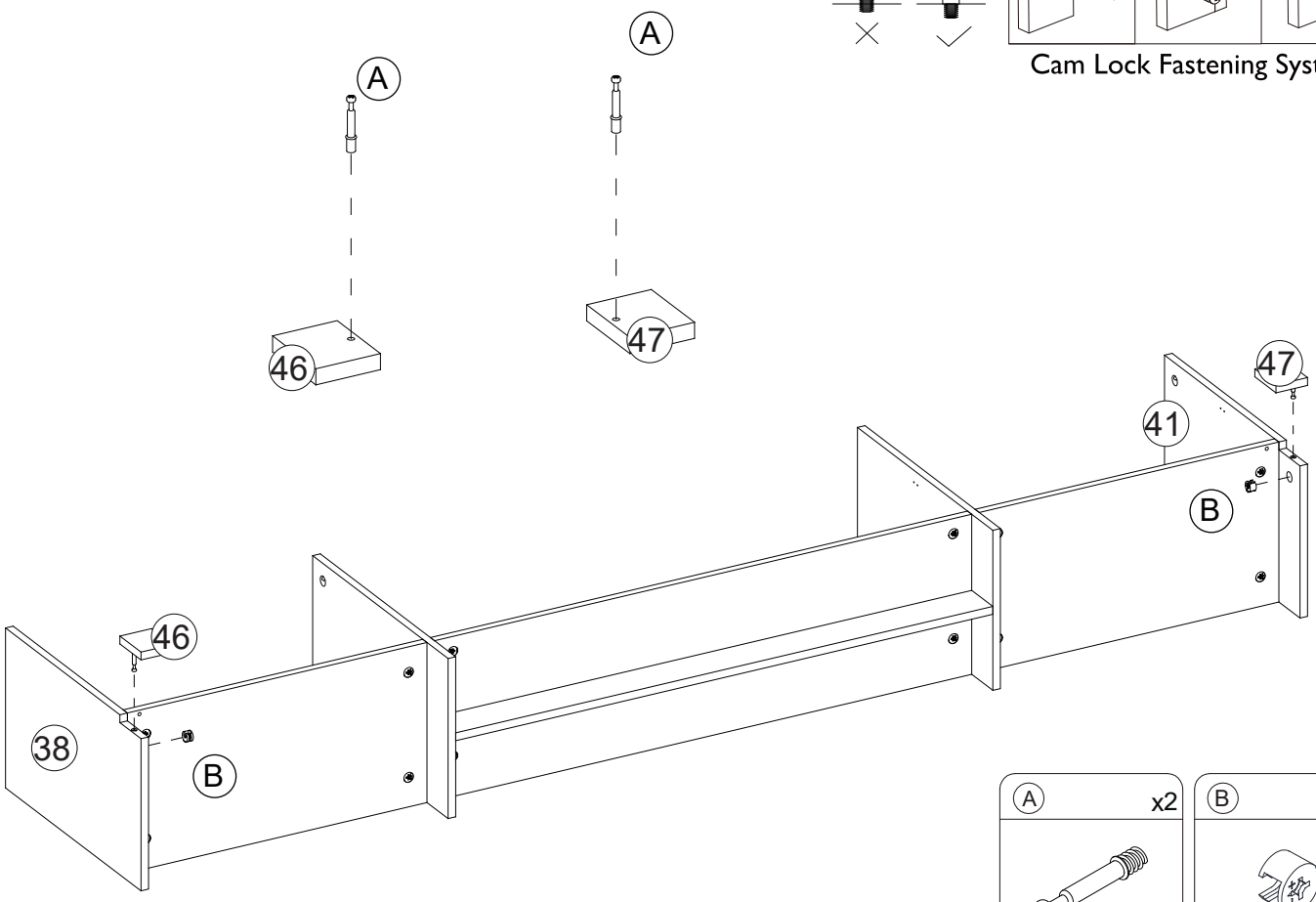

9

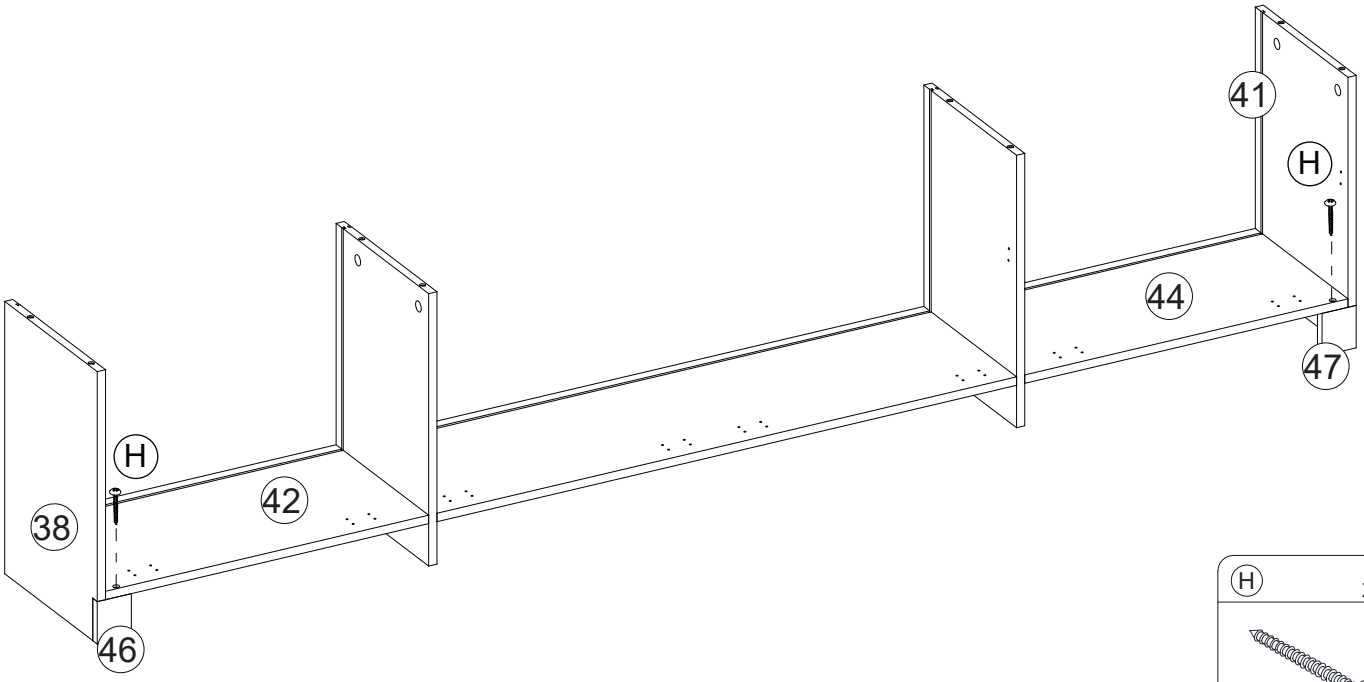

10

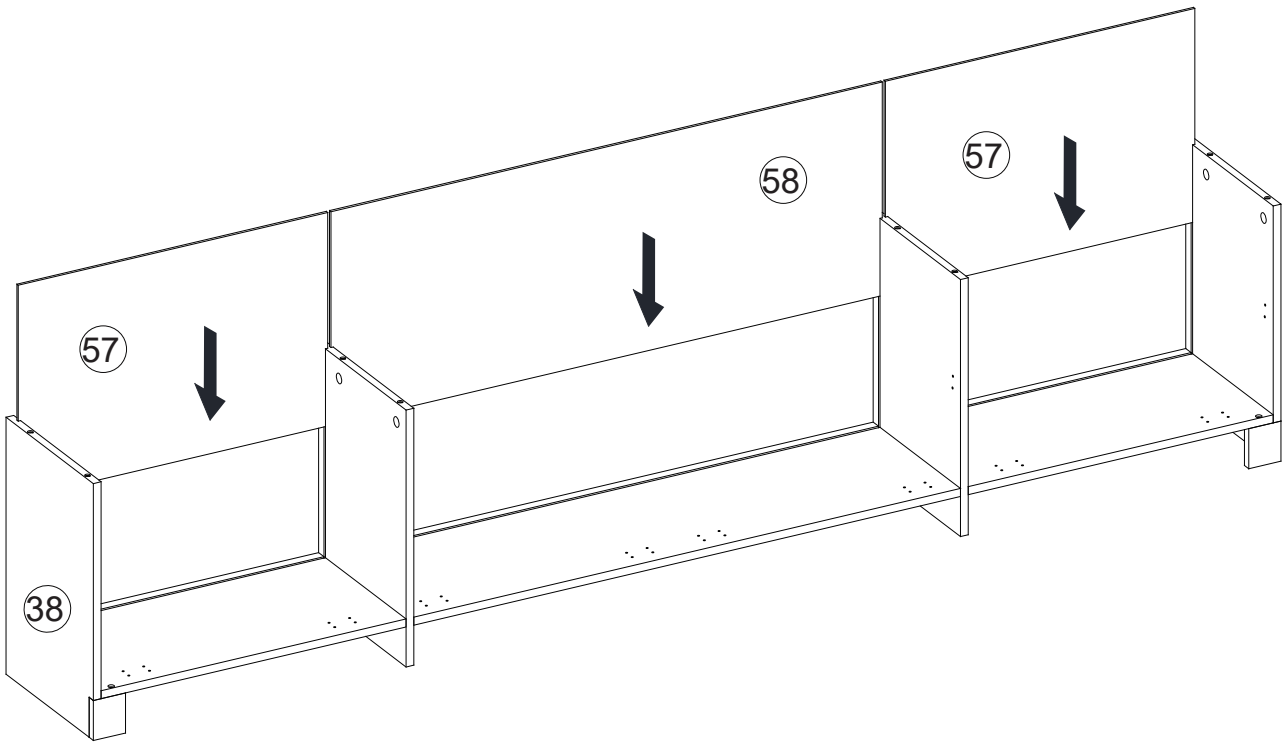

11

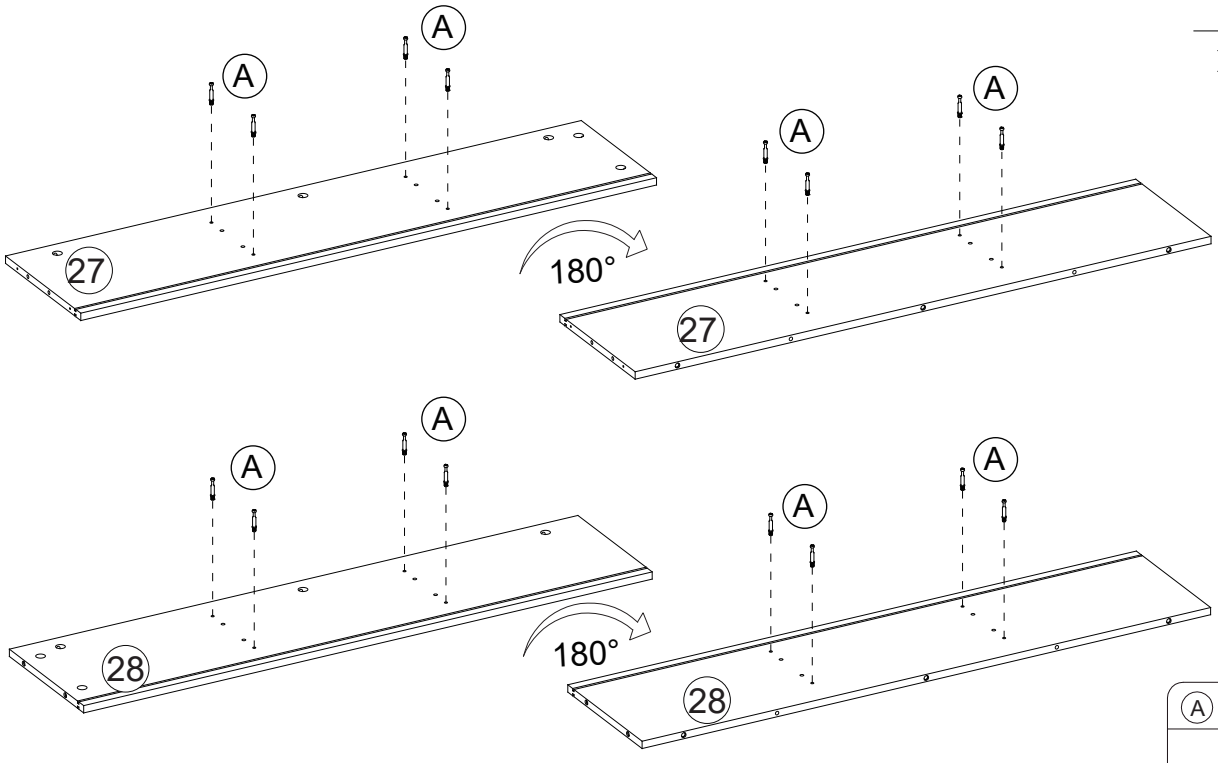

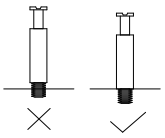

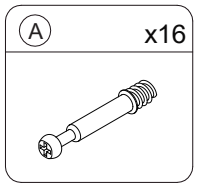

12

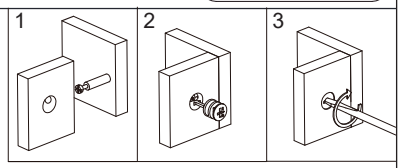

Cam Lock Fastening System

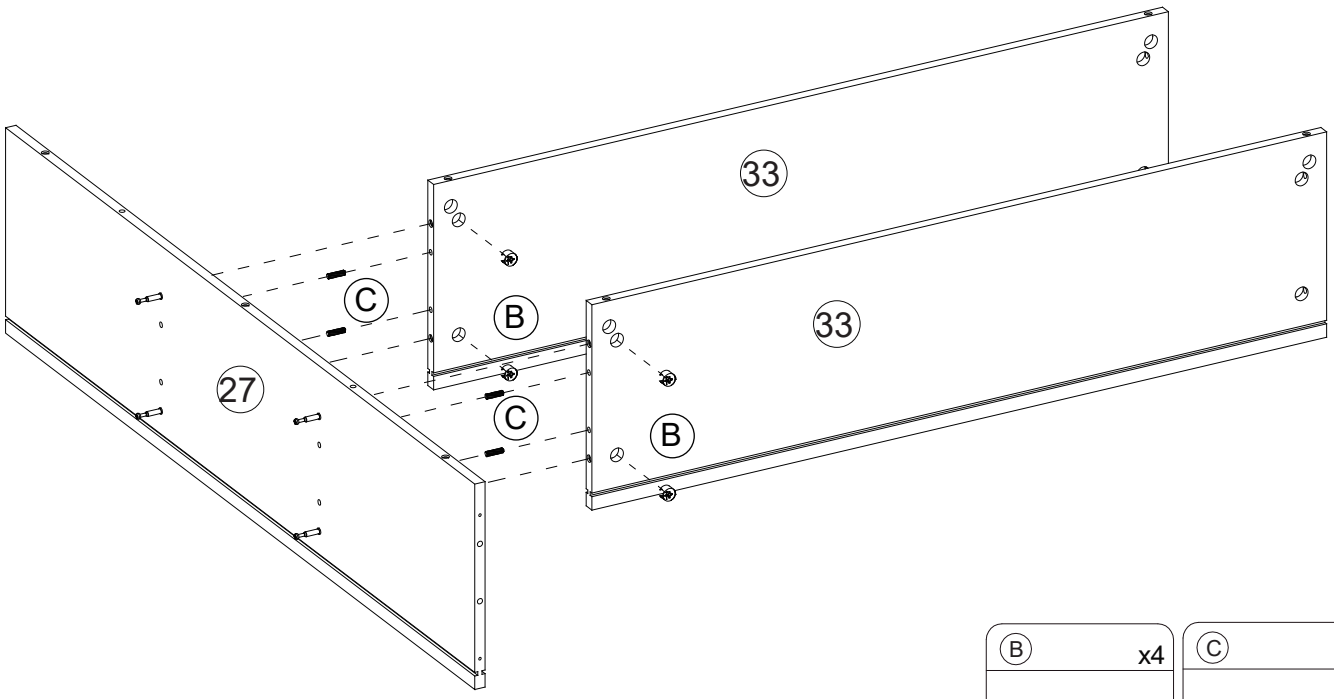

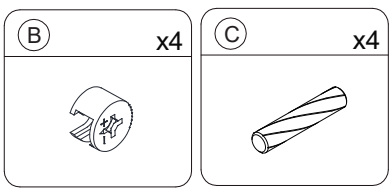

13

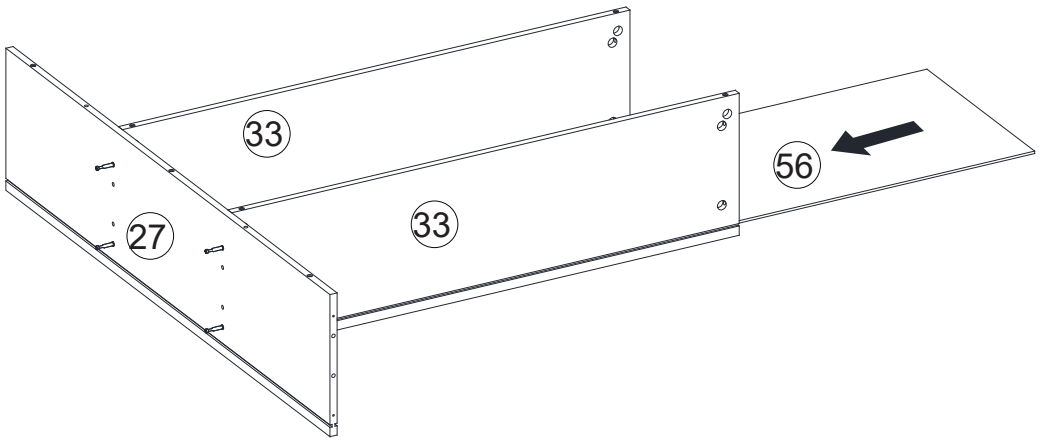

14

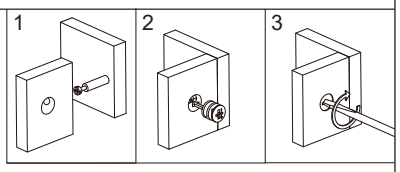

Cam Lock Fastening System

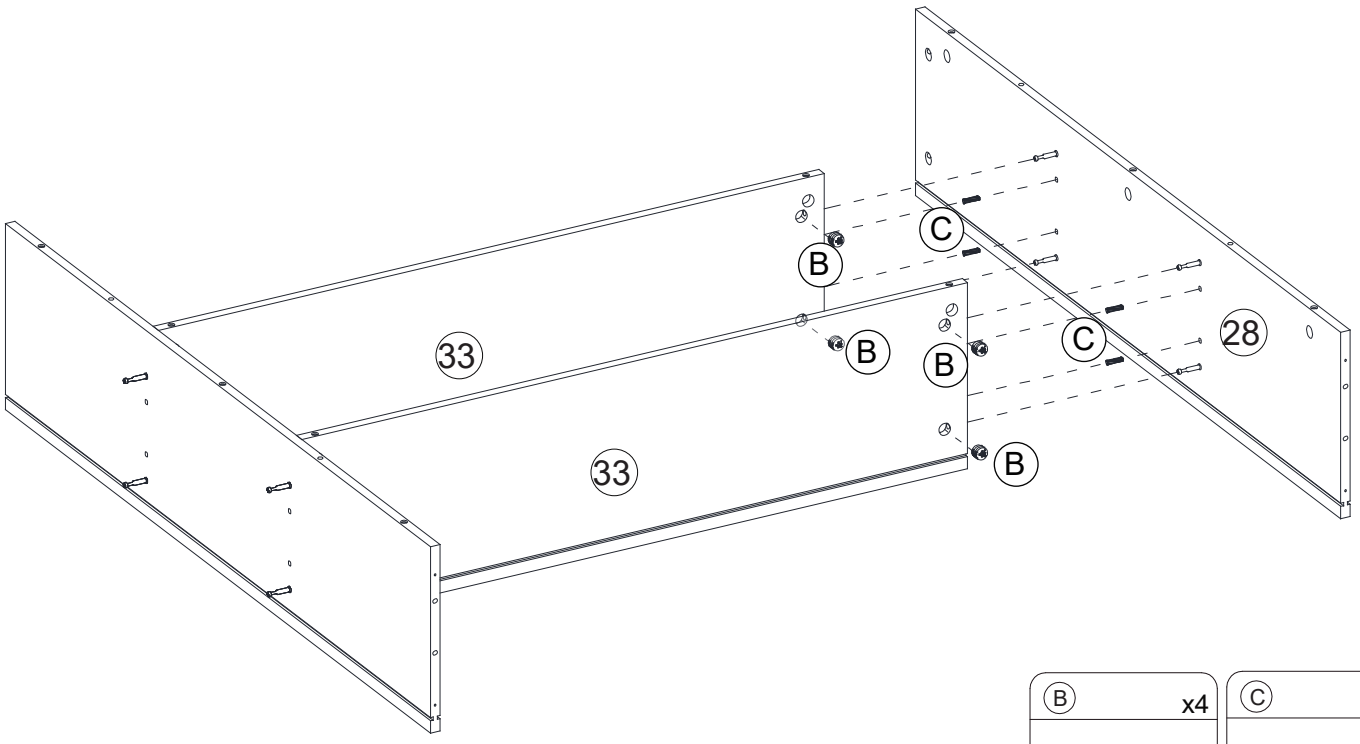

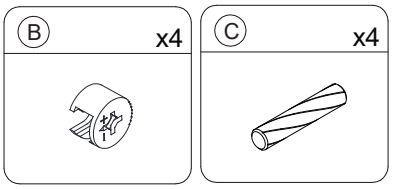

15

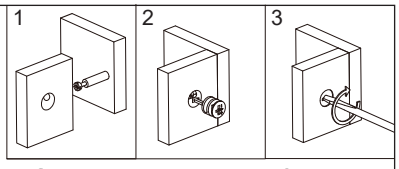

Cam Lock Fastening System

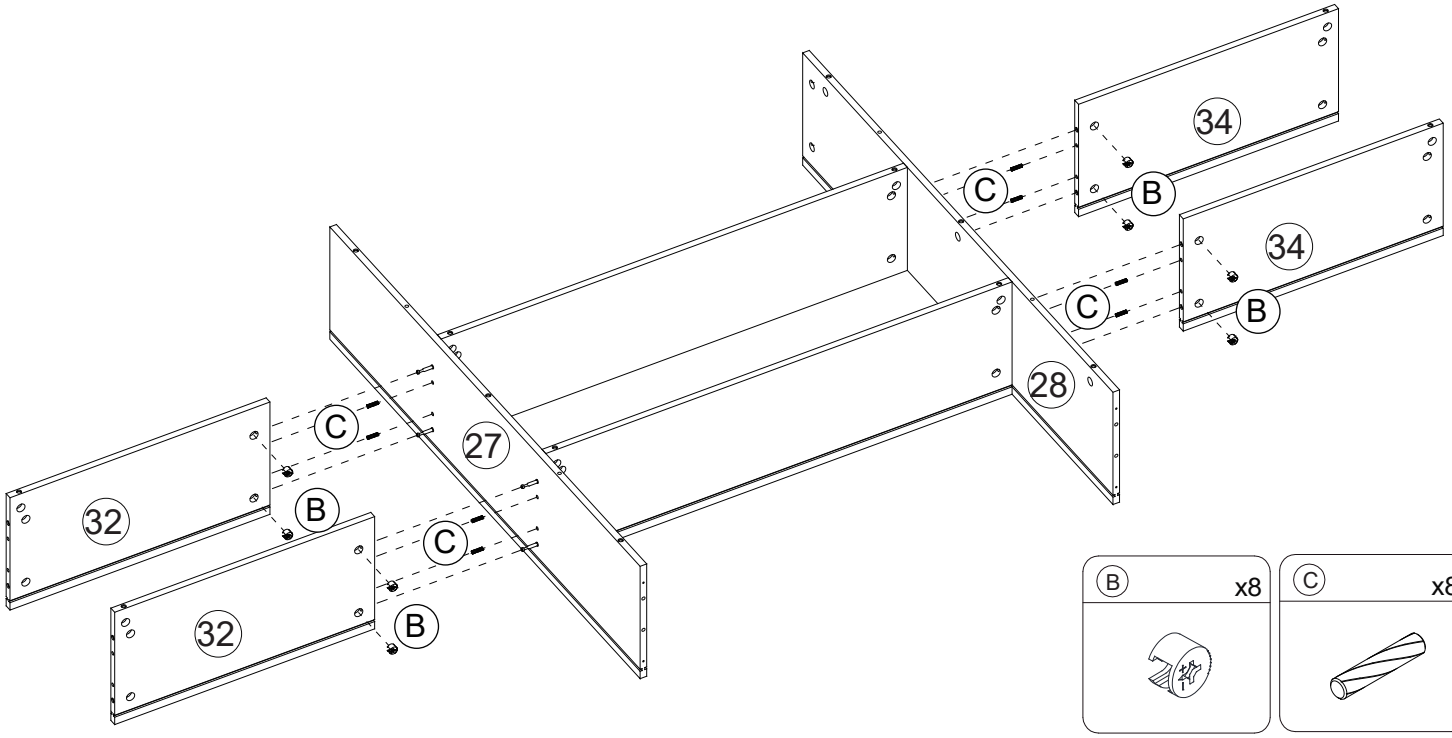

16

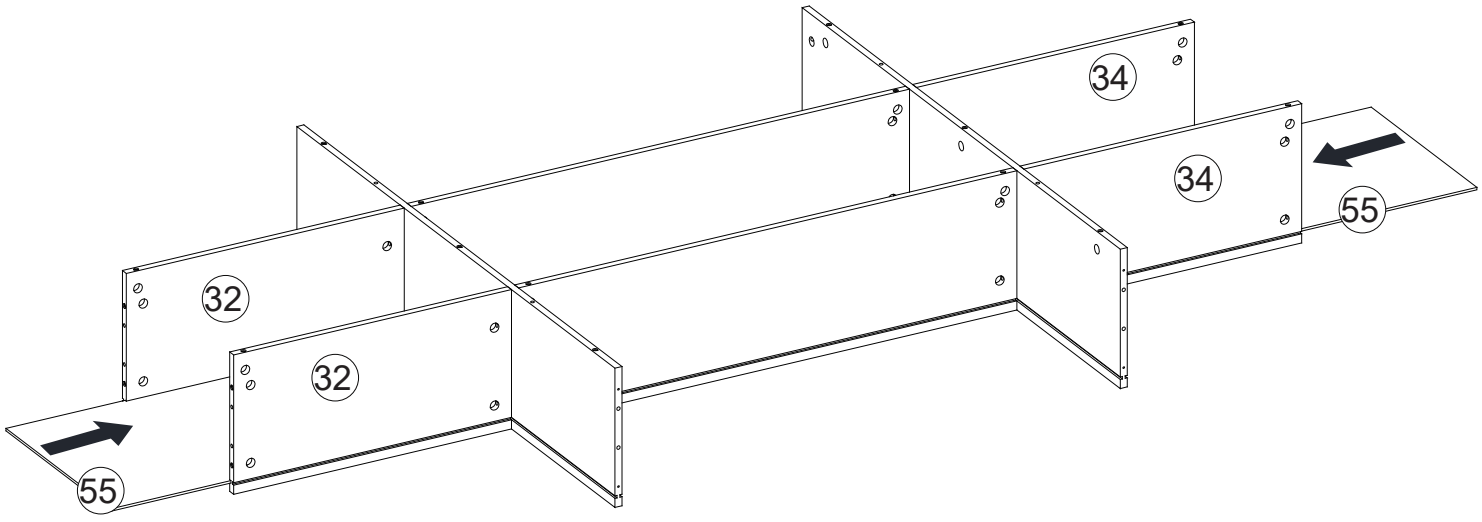

17

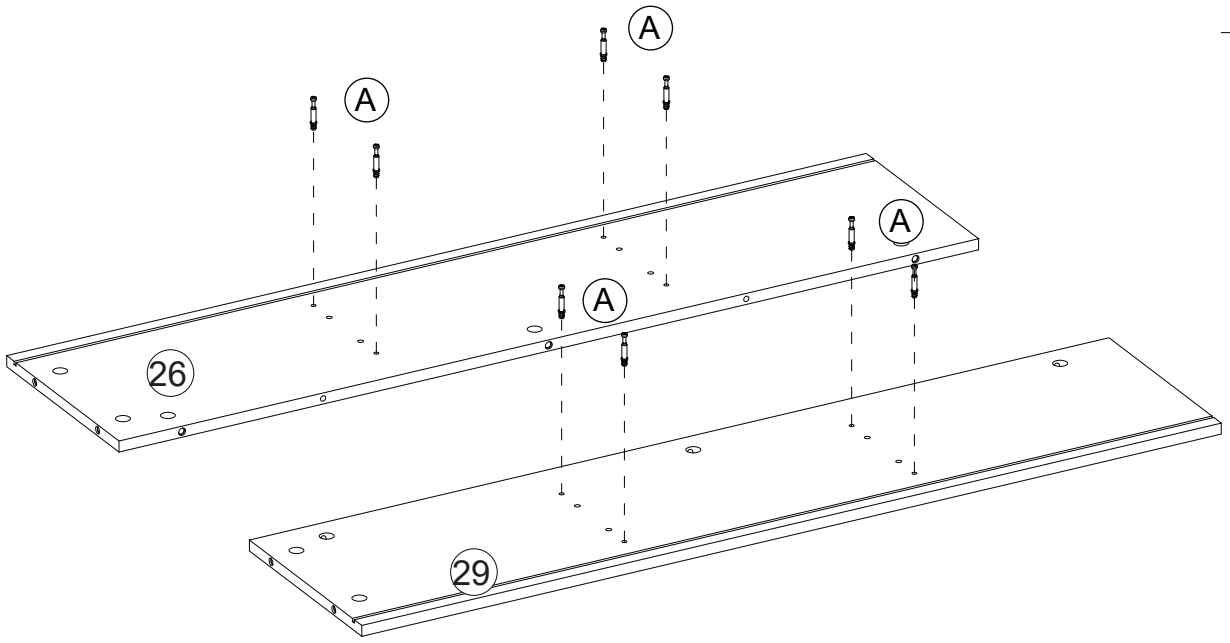

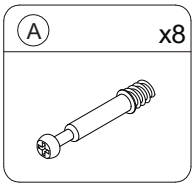

18

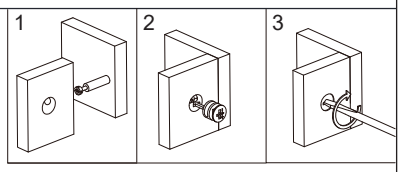

Cam Lock Fastening System

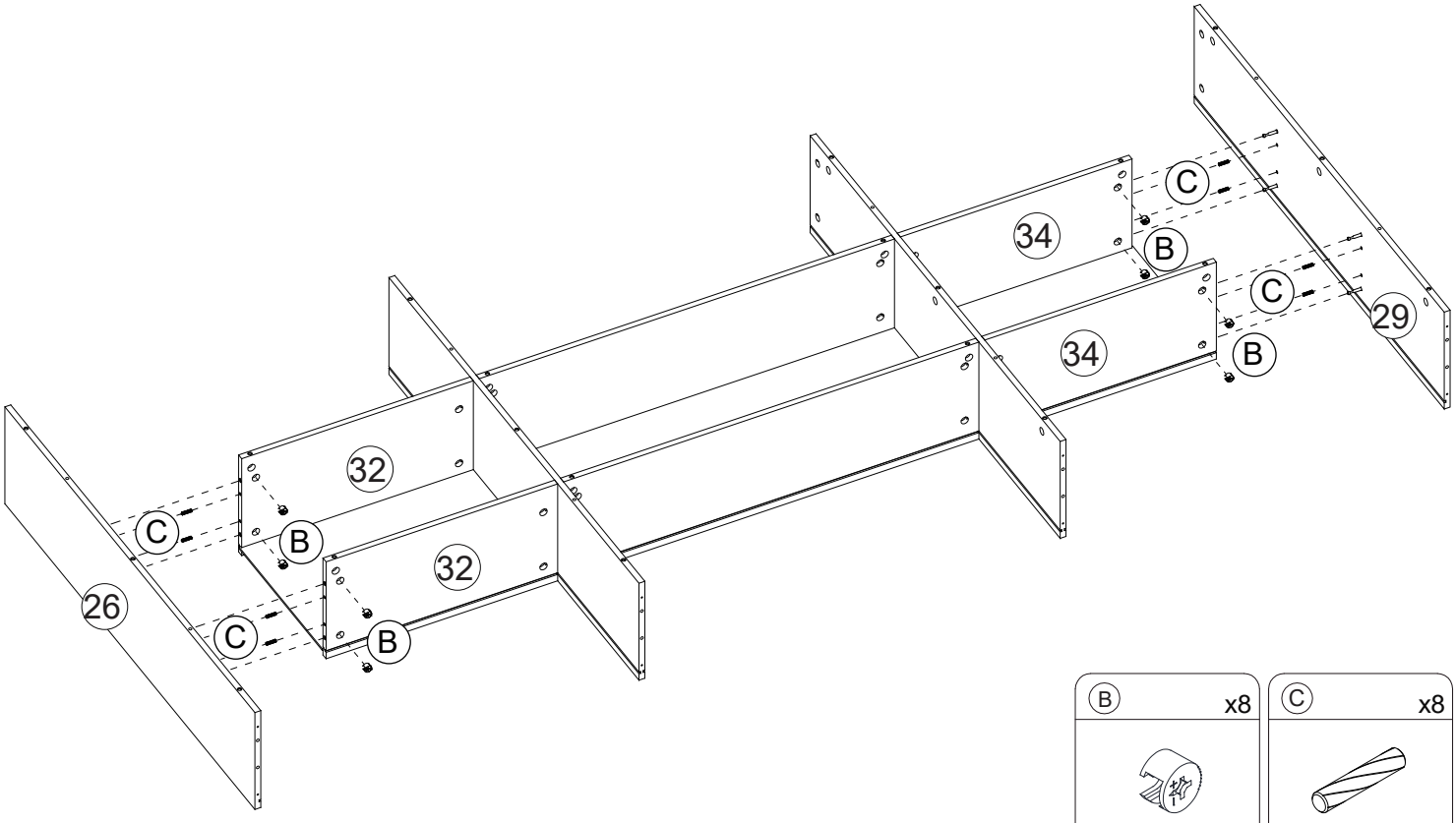

19

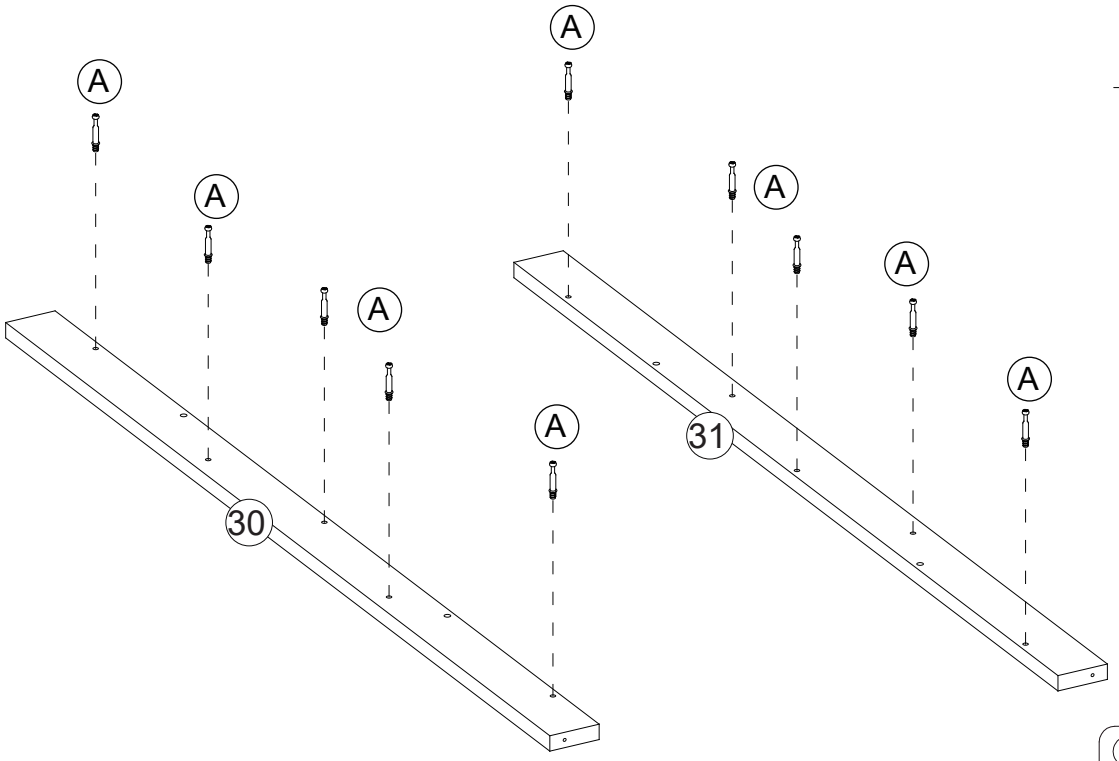

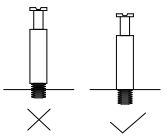

x2

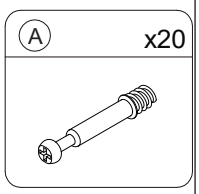

20

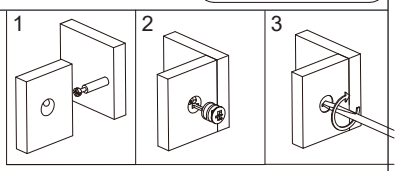

Cam Lock Fastening System

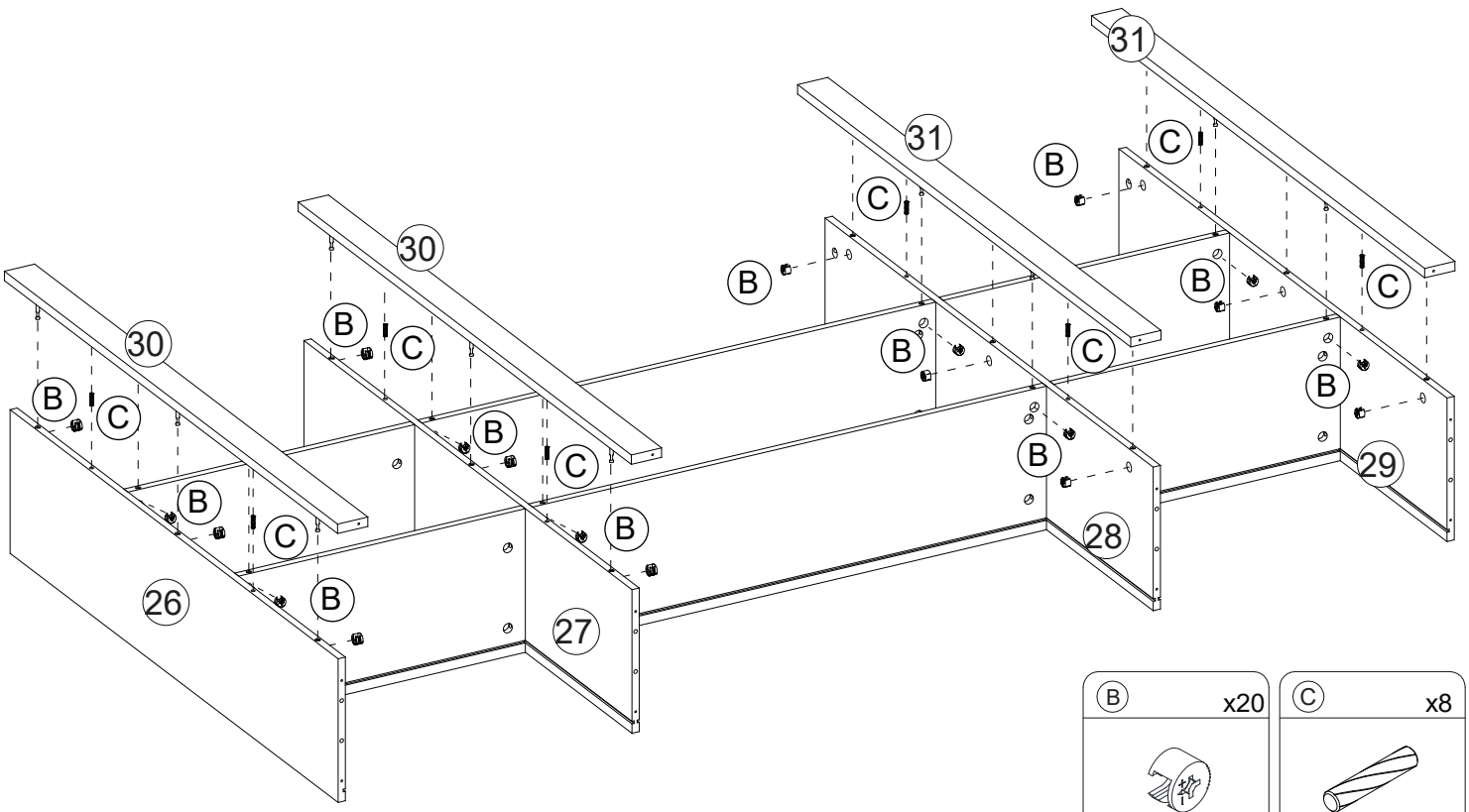

21

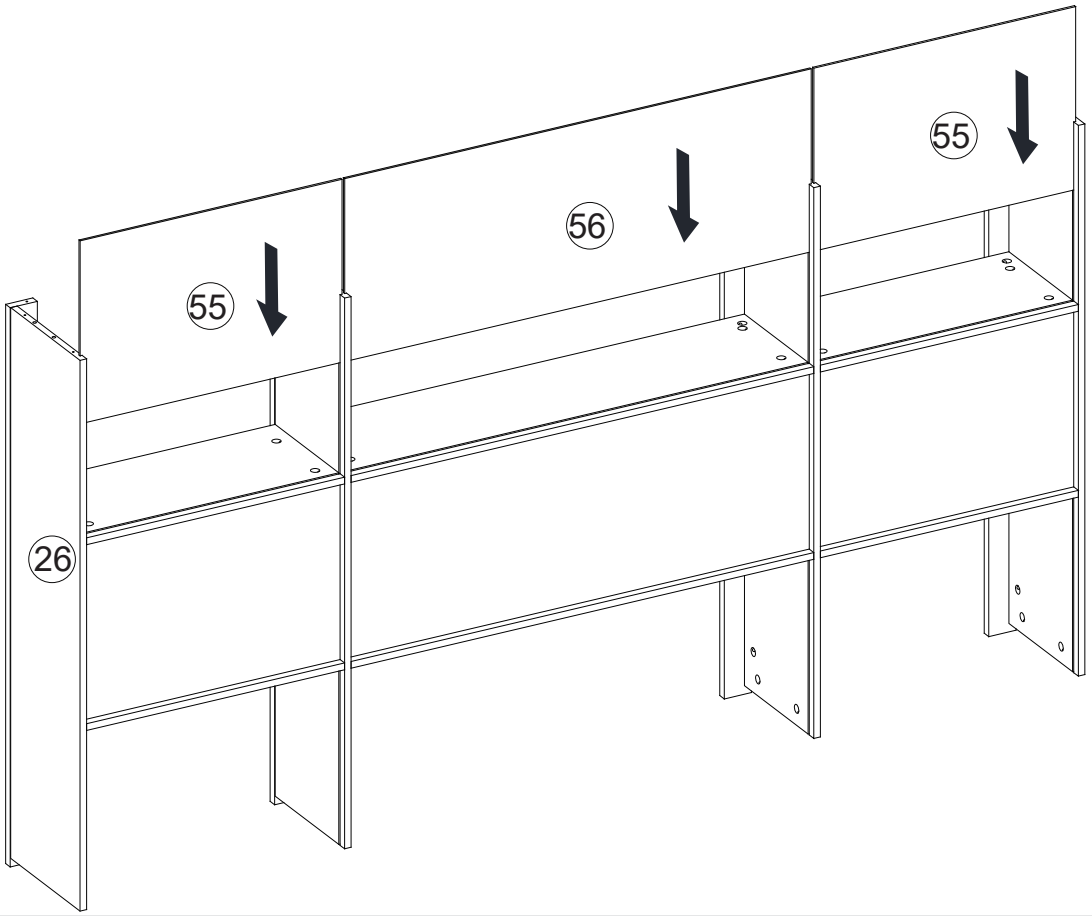

22

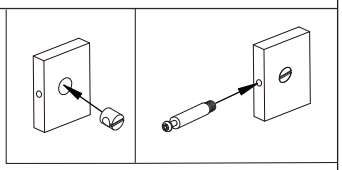

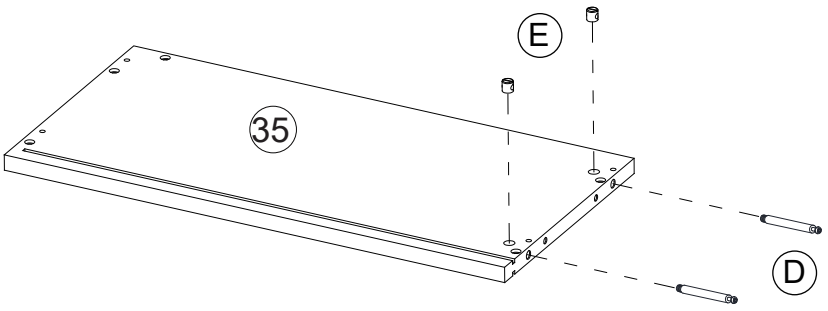

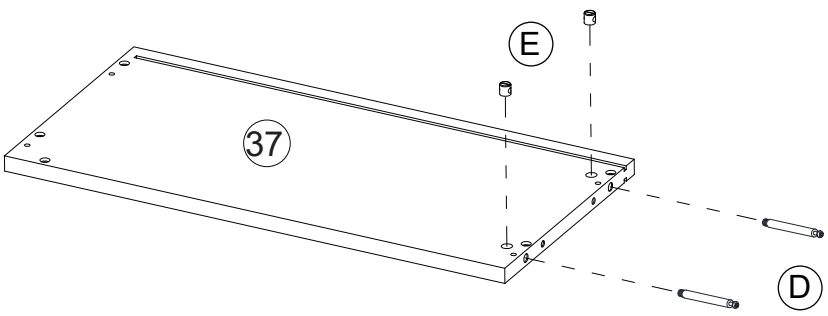

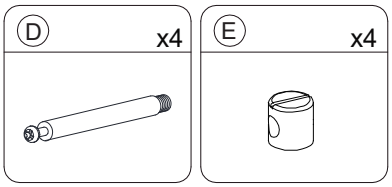

23

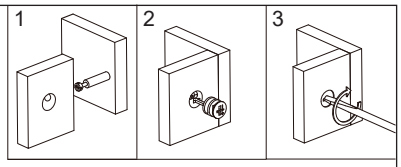

Cam Lock Fastening System

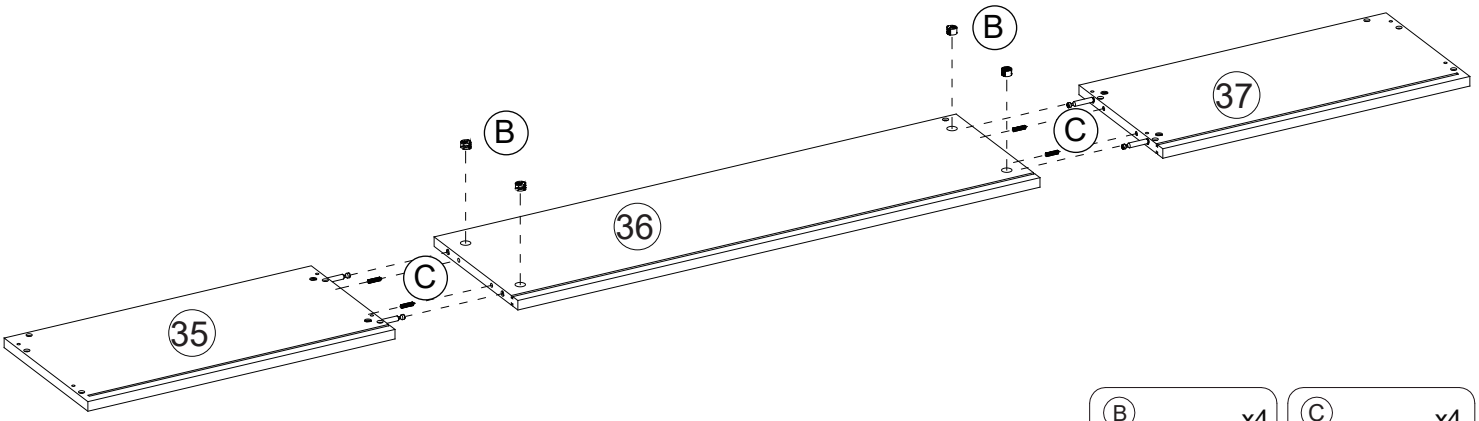

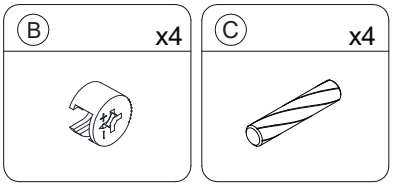

24

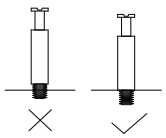

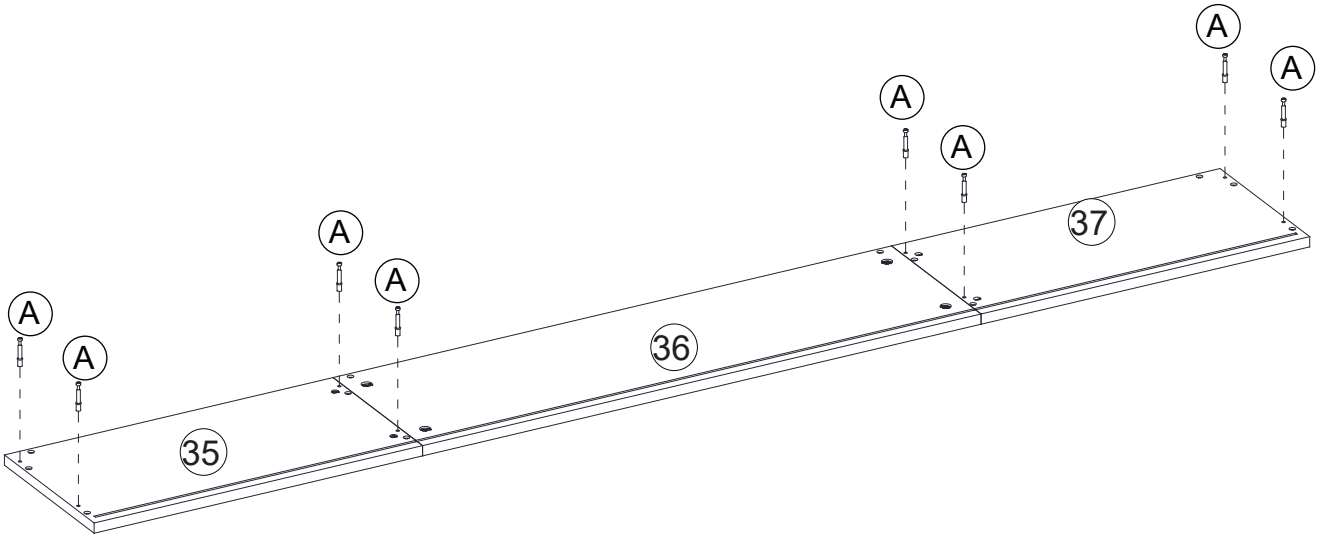

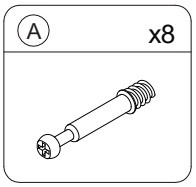

25

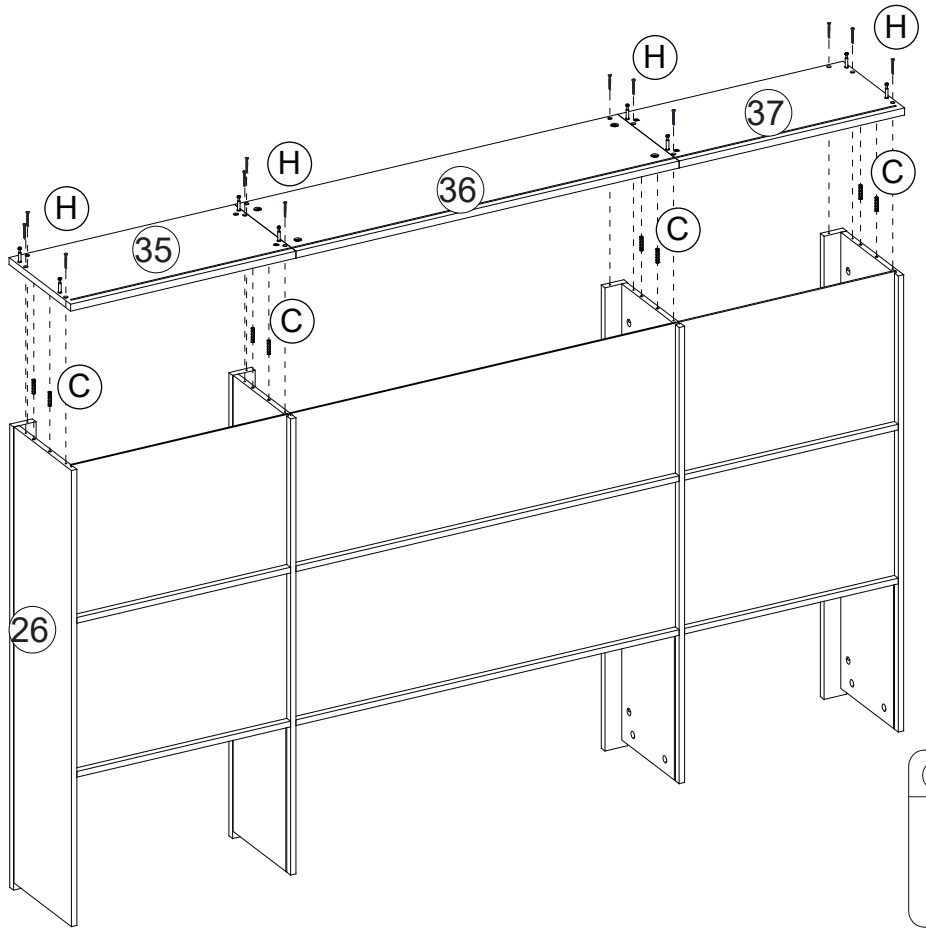

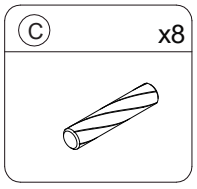

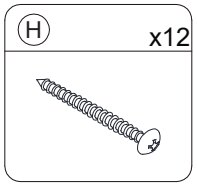

26

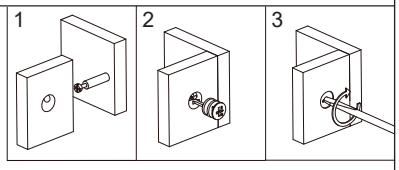

Cam Lock Fastening System

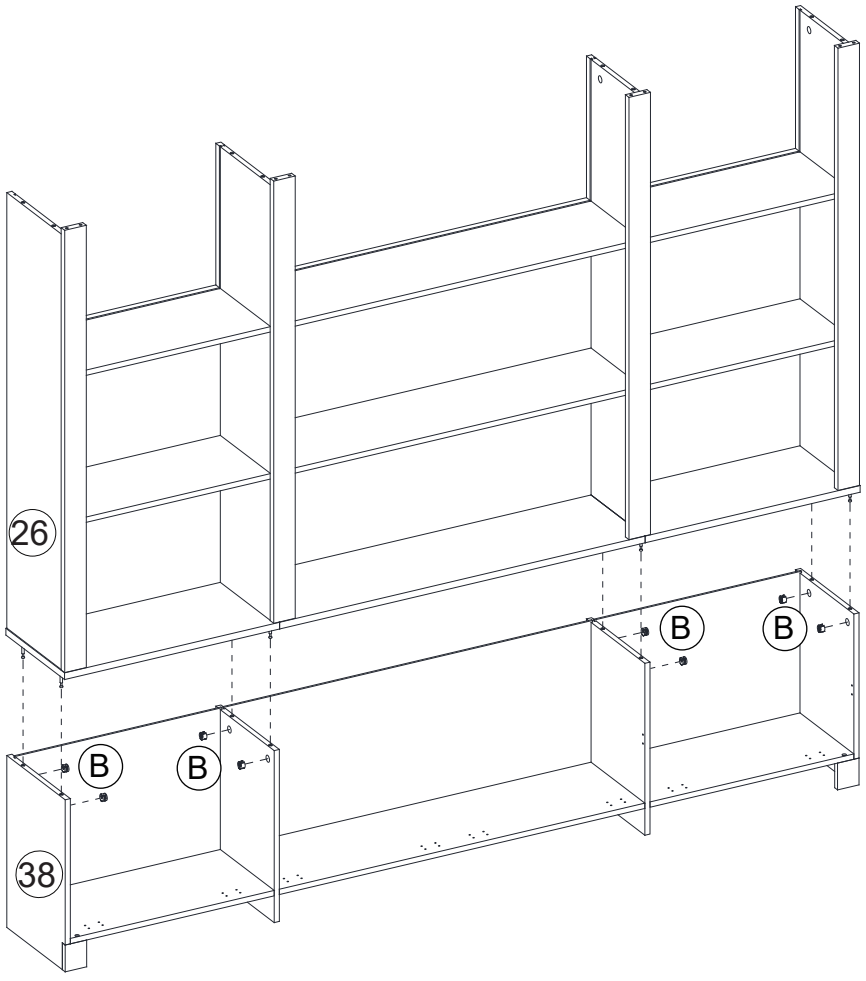

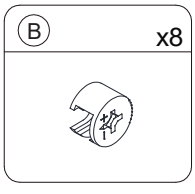

27

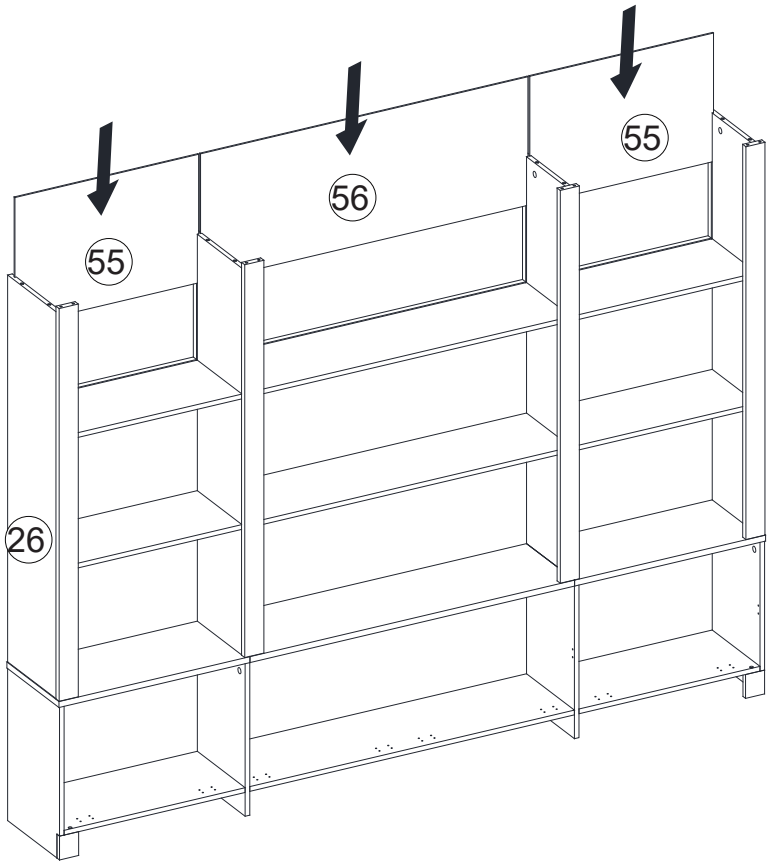

28

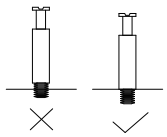

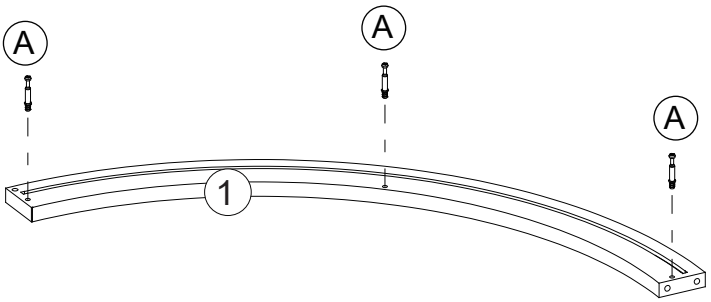

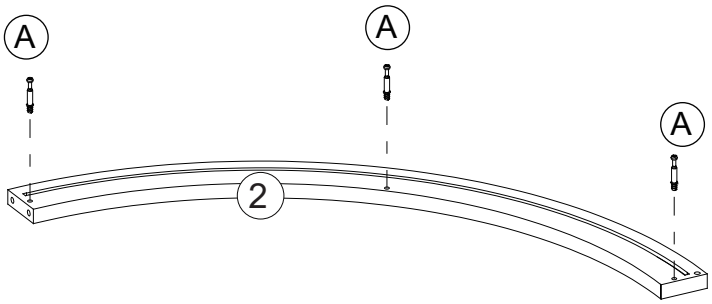

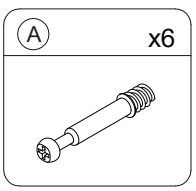

29

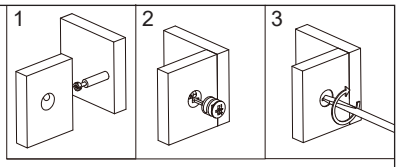

Cam Lock Fastening System

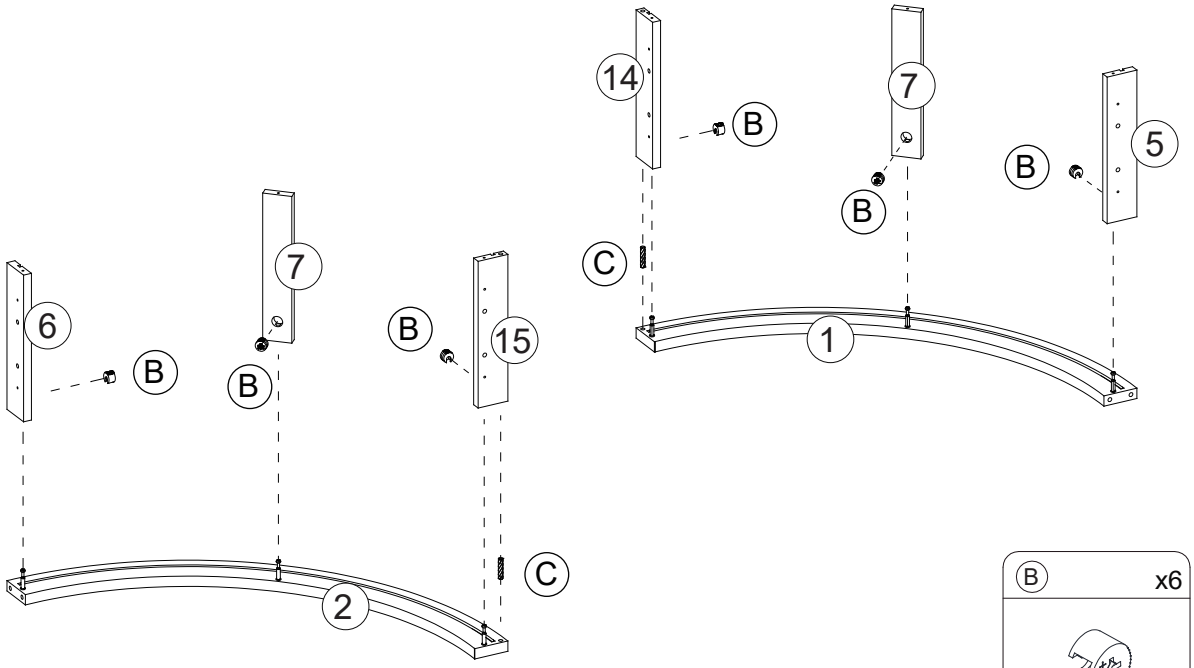

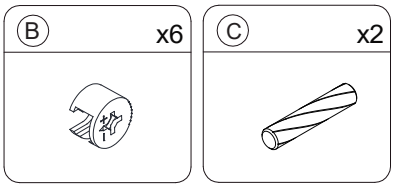

30

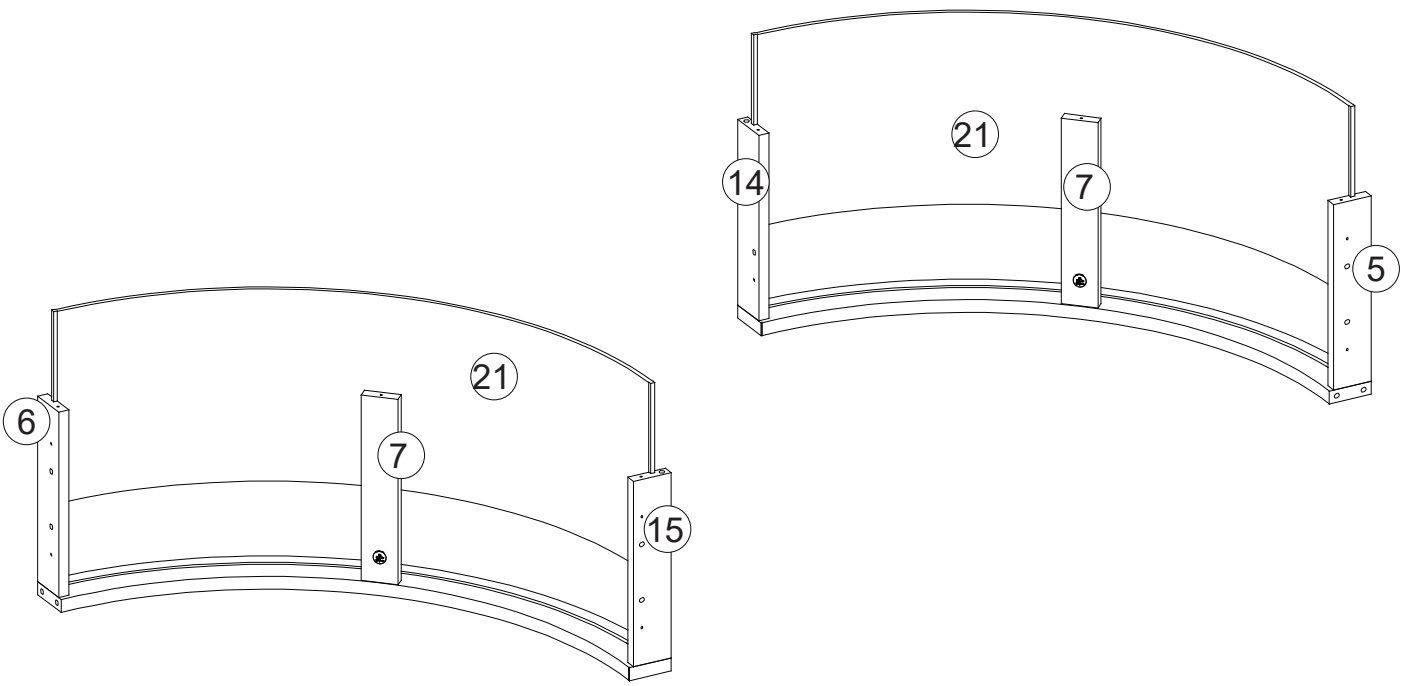

31

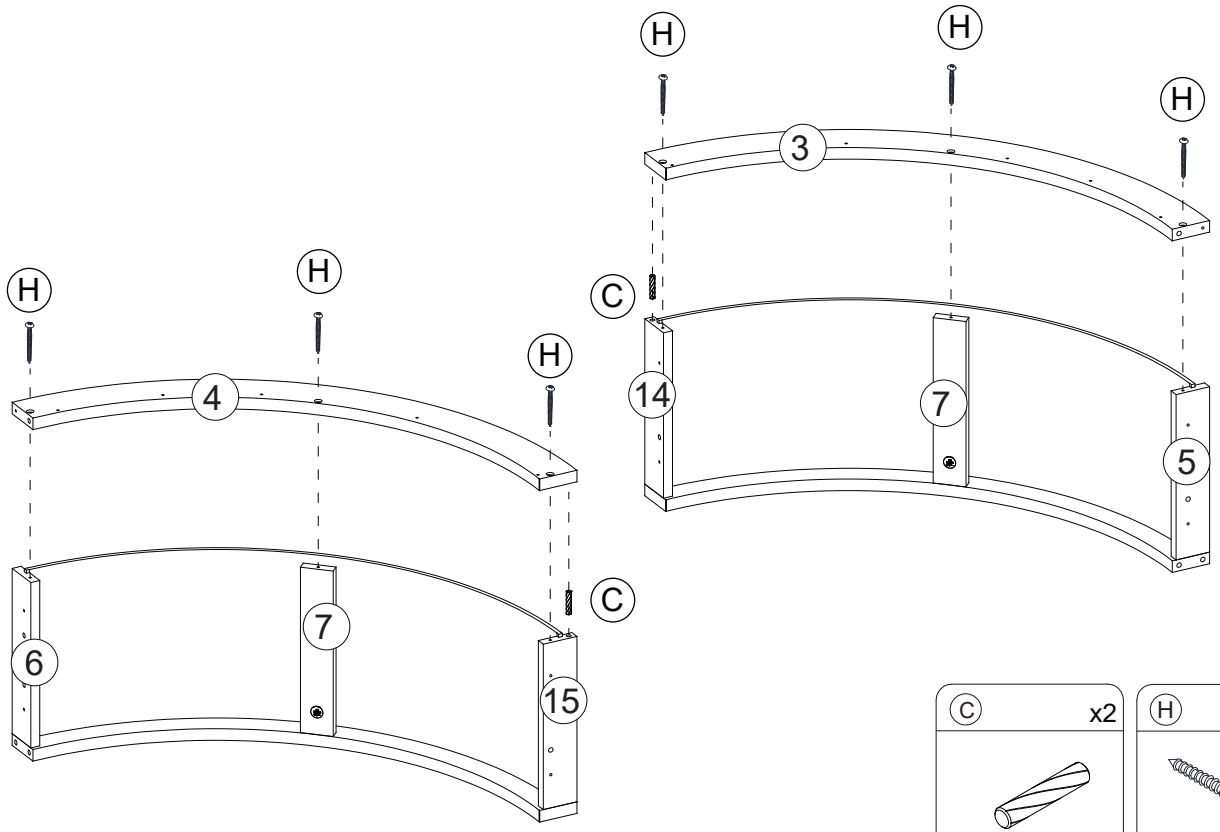
H
H
H
3
C
14
7
5
H
H
H
4
6
7
C
15

C x2
H x6

32

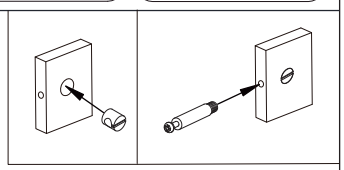

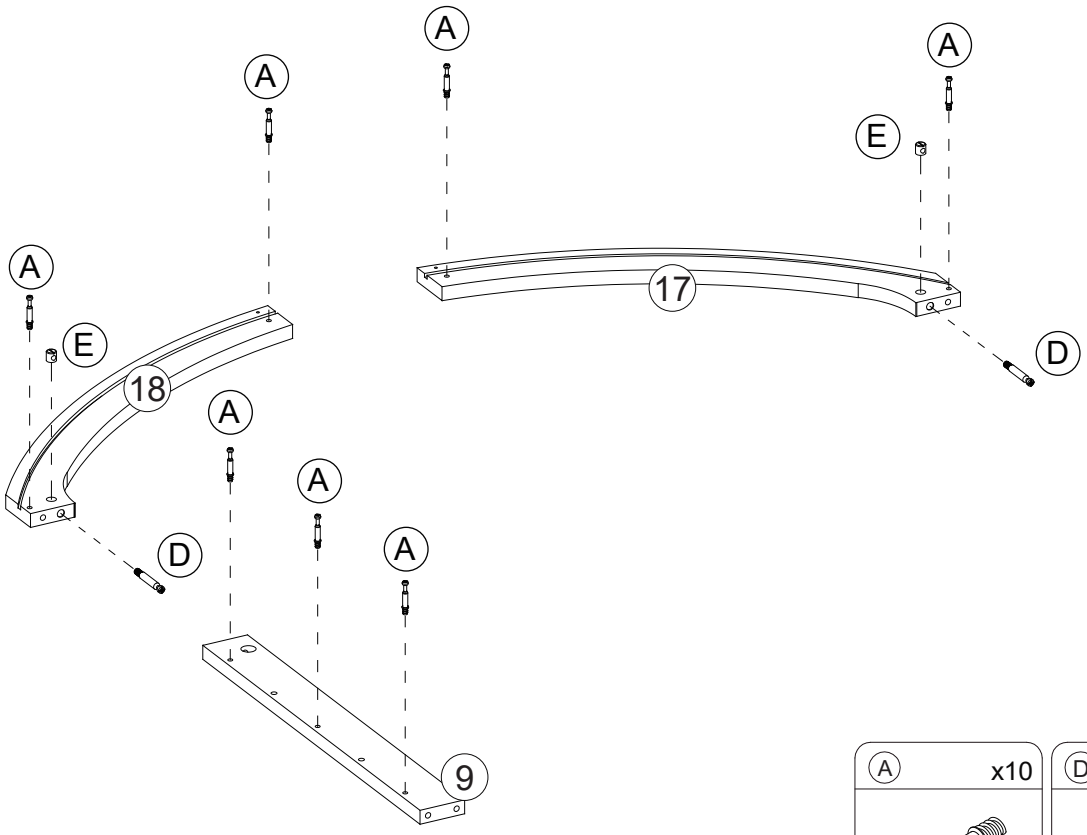
A
A
A
A
E
17
D
A
A
A
E
18
A
A
A
D
8
9

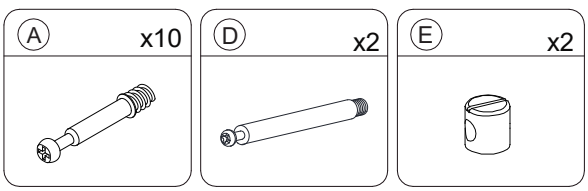
A x10
D x2
E x2

33

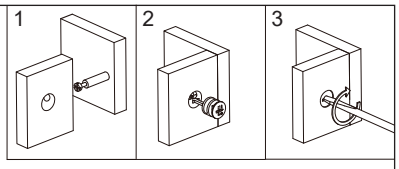

Cam Lock Fastening System

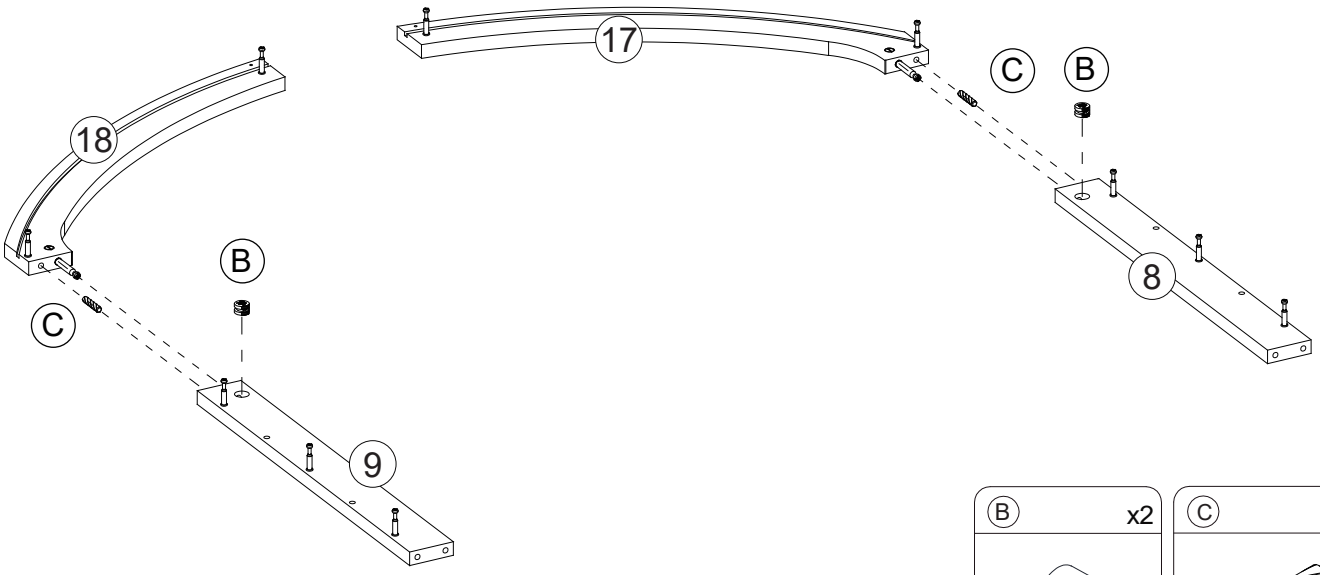

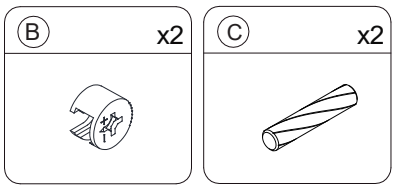

34

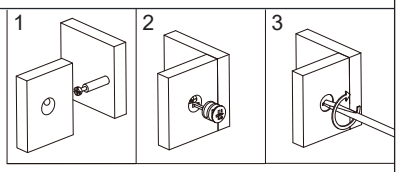

Cam Lock Fastening System

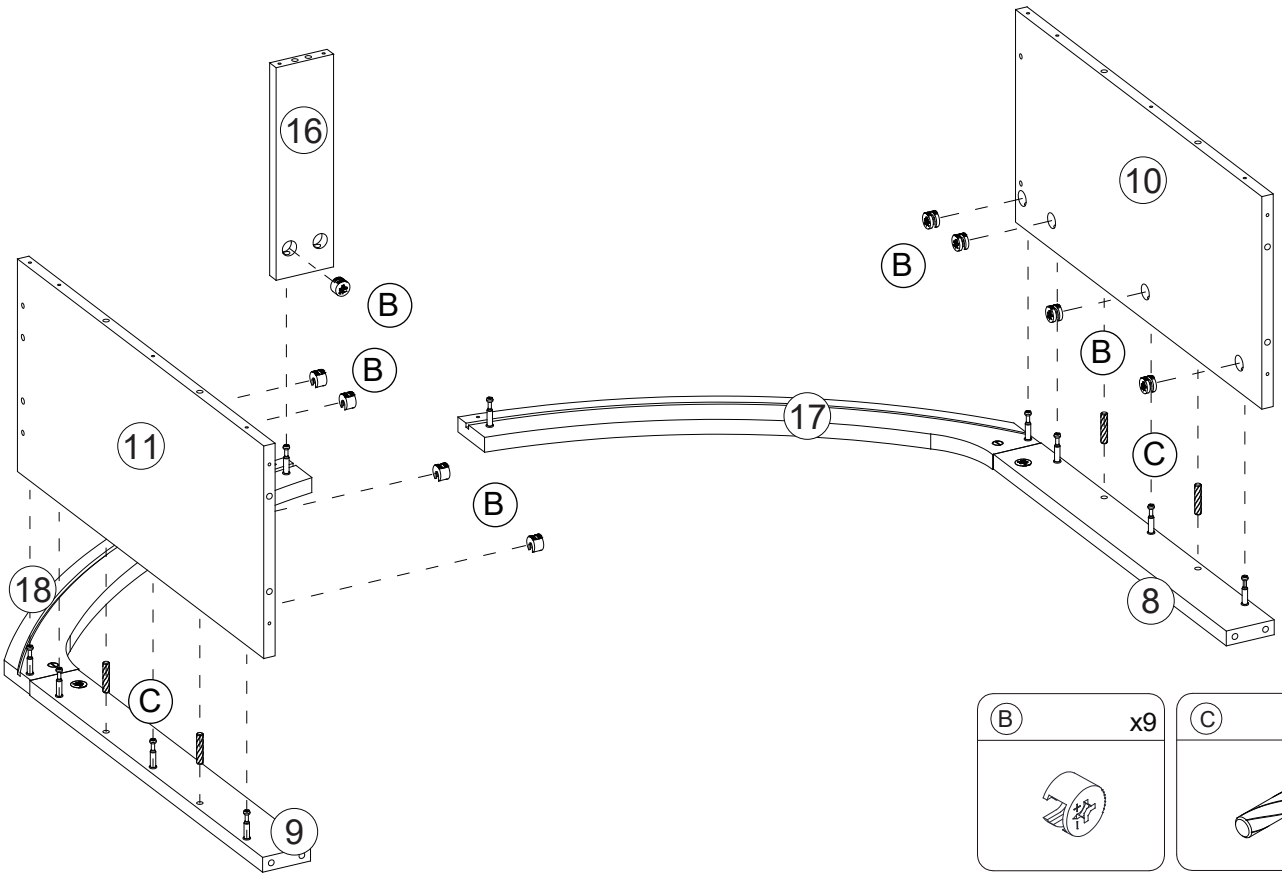

35

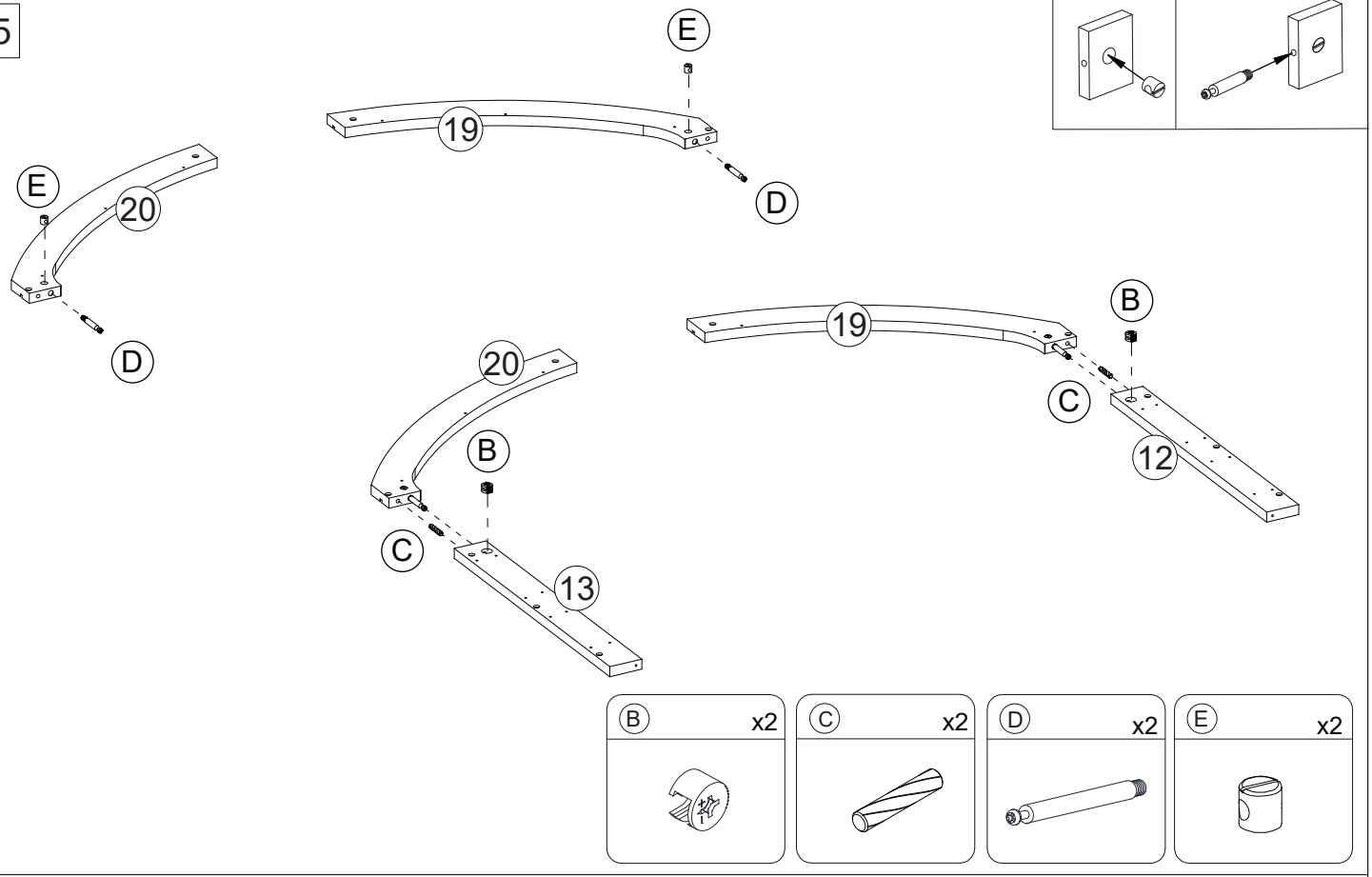

36

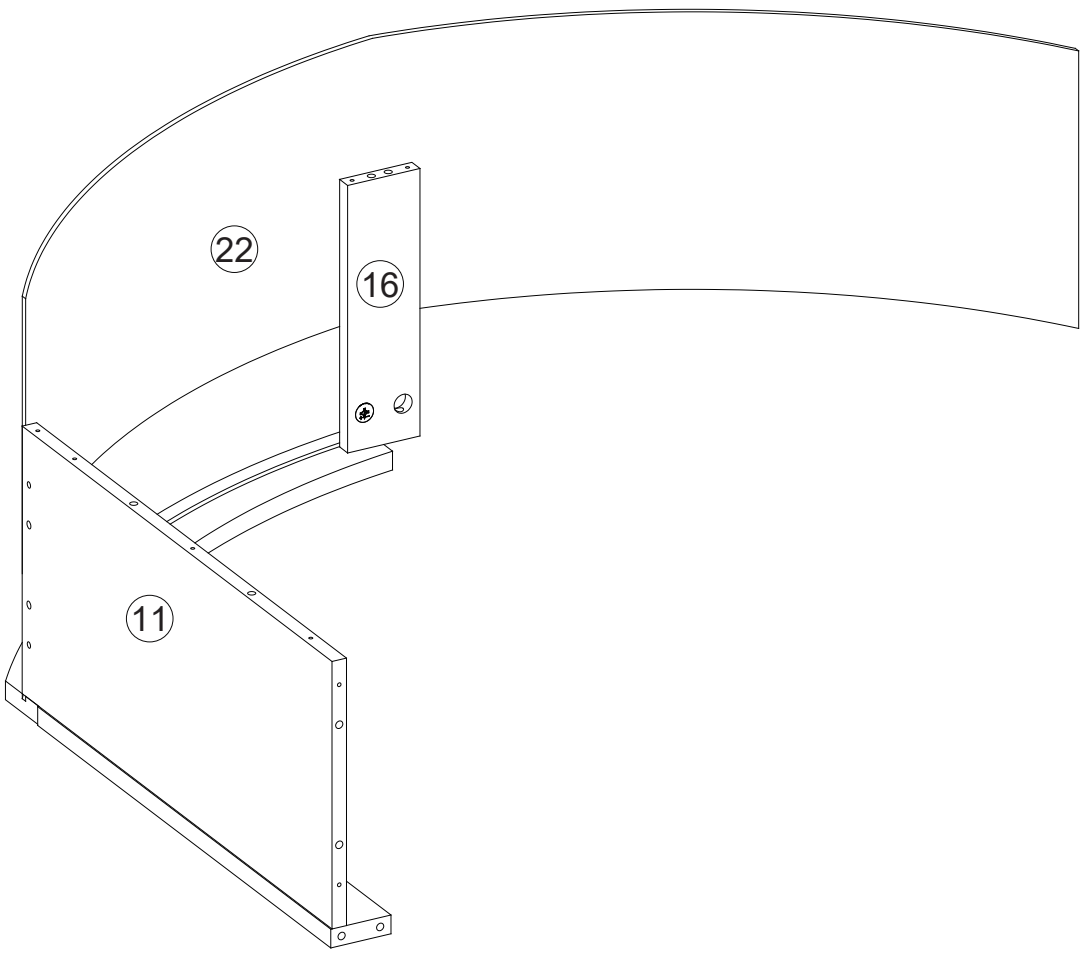

37

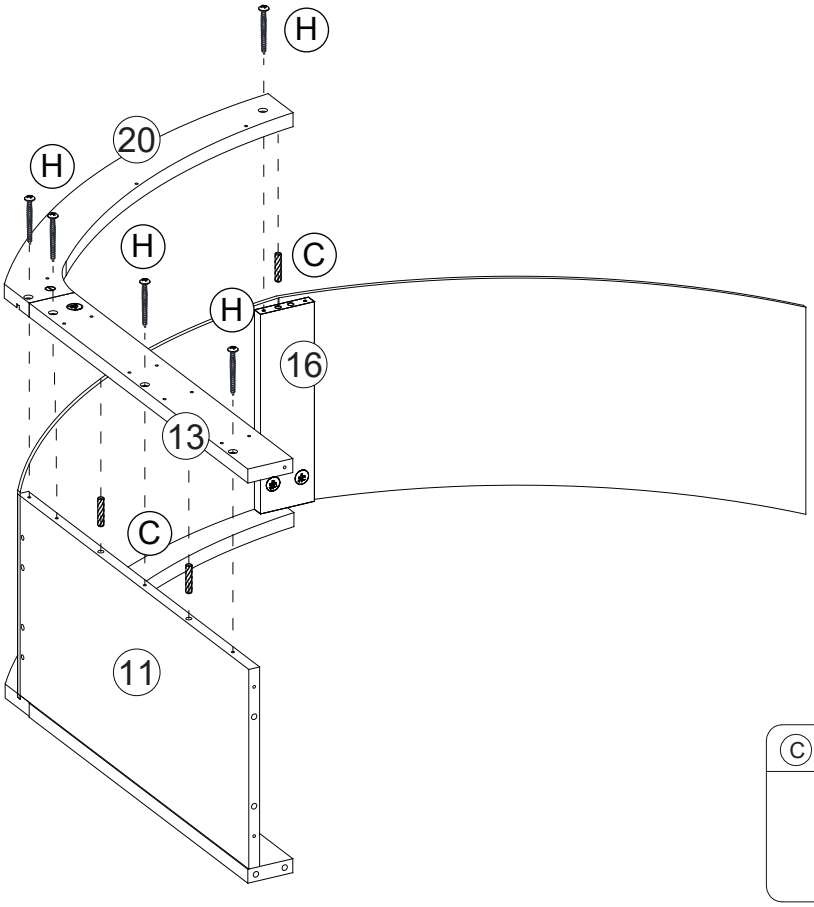

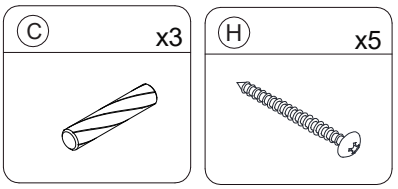

38

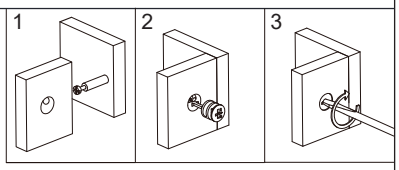

Cam Lock Fastening System

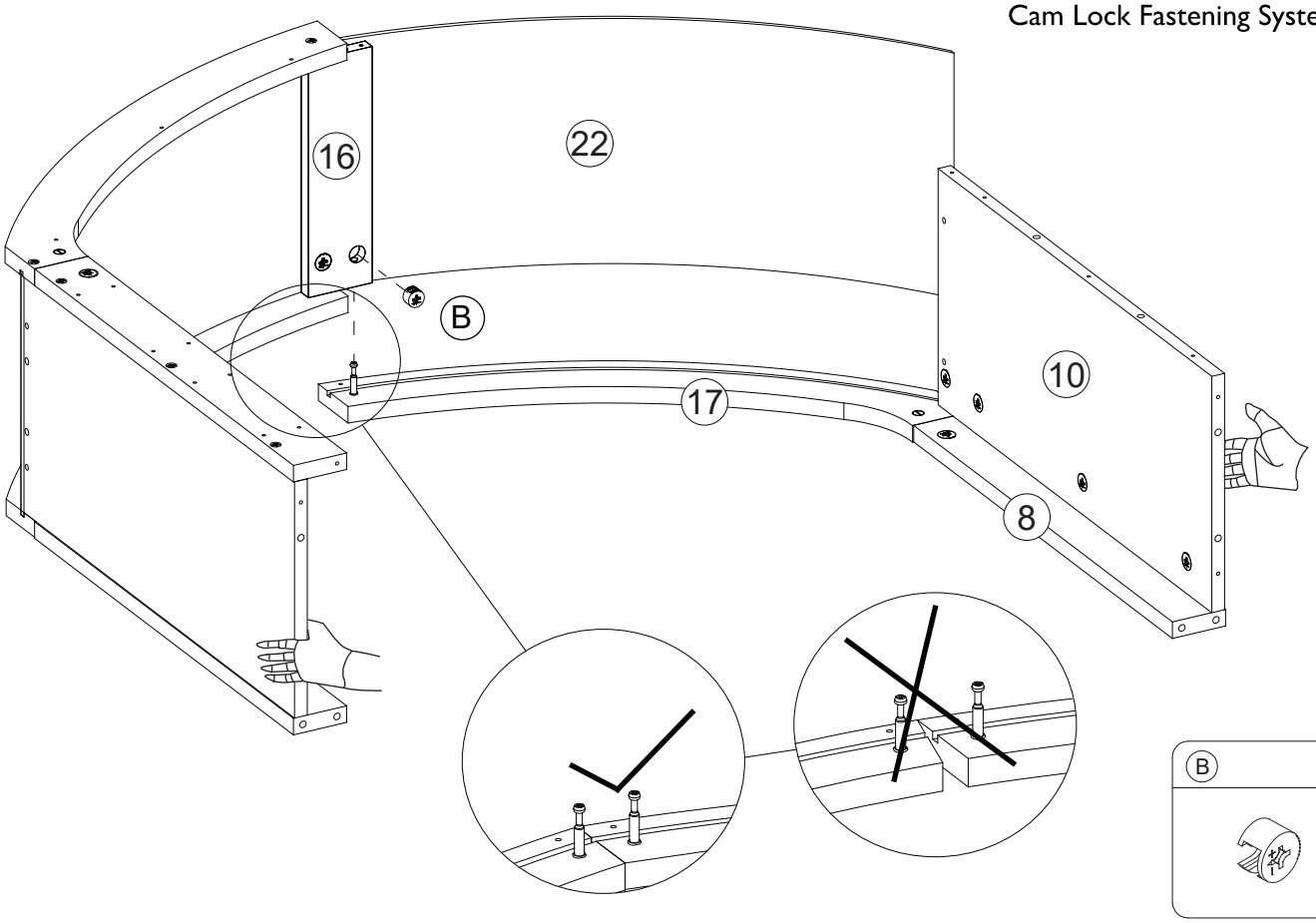

39

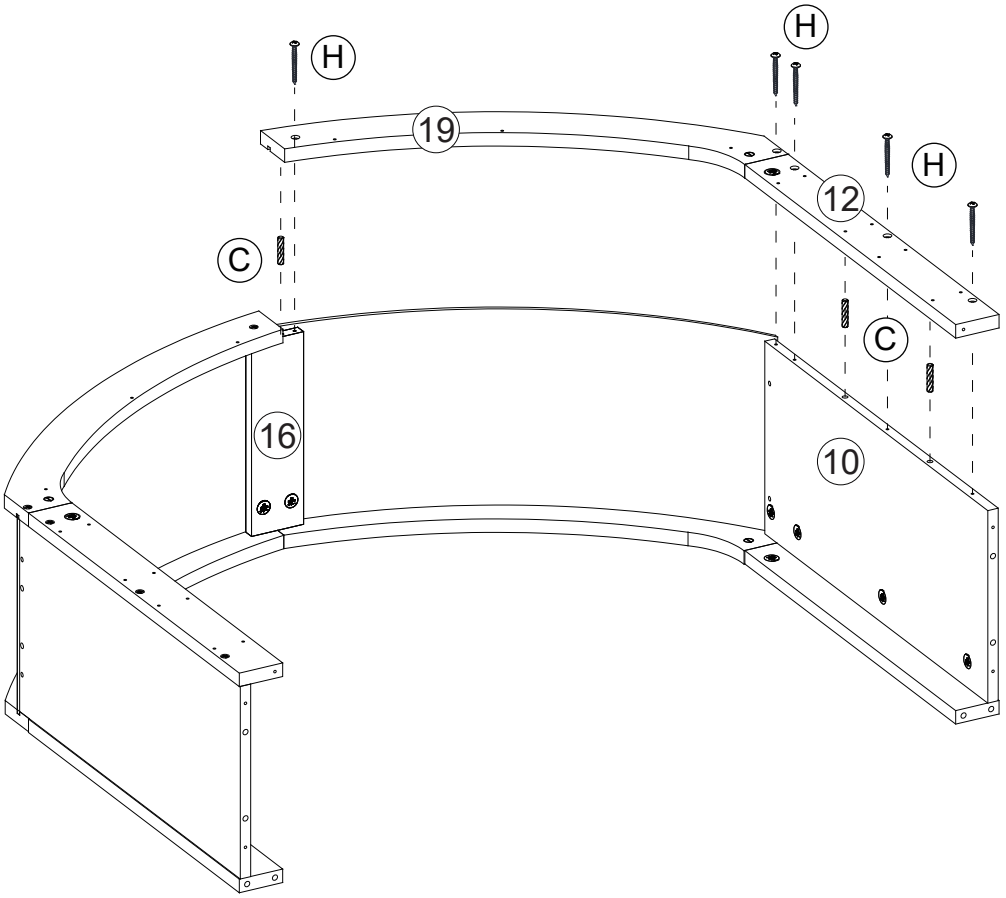

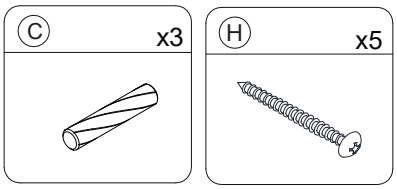

40

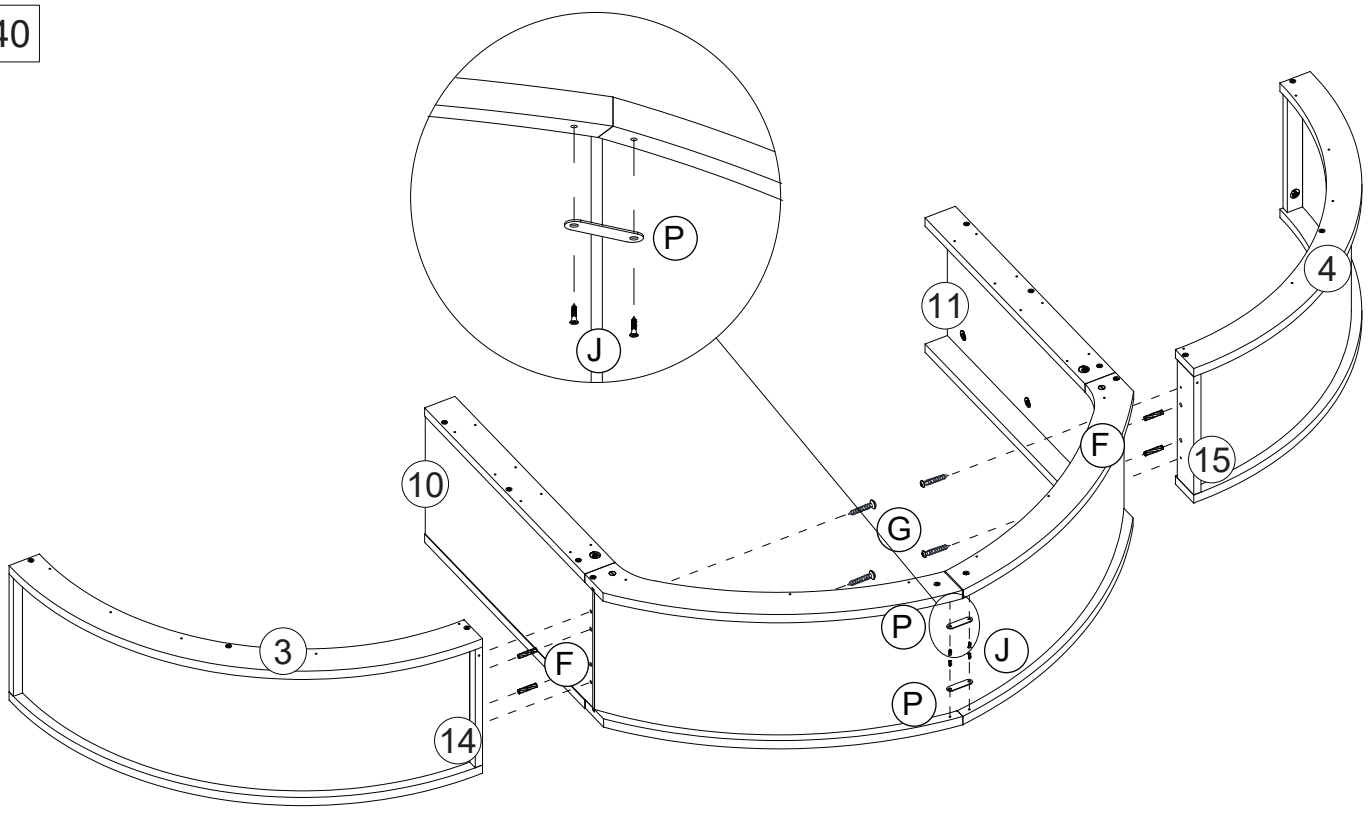

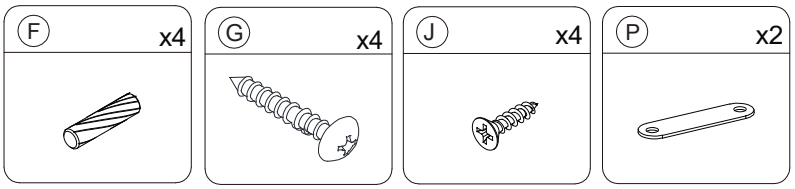

41

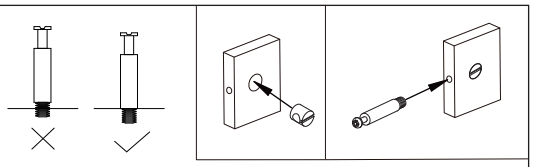

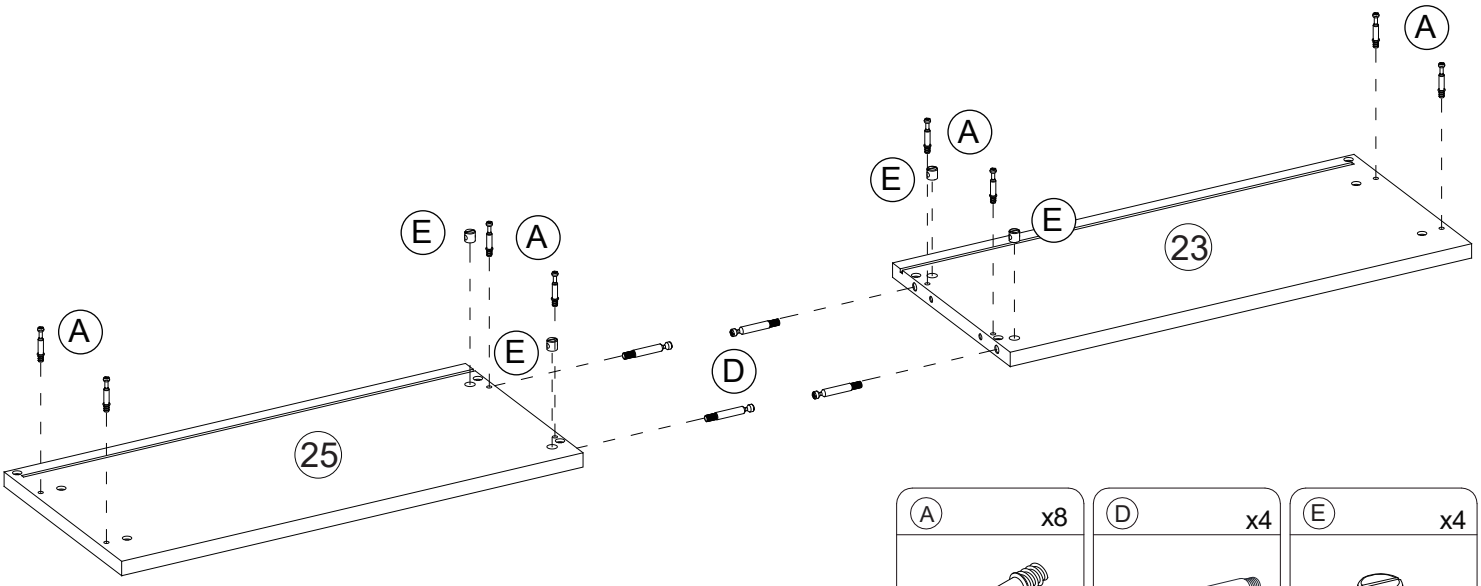

42

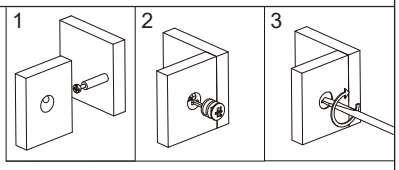

Cam Lock Fastening System

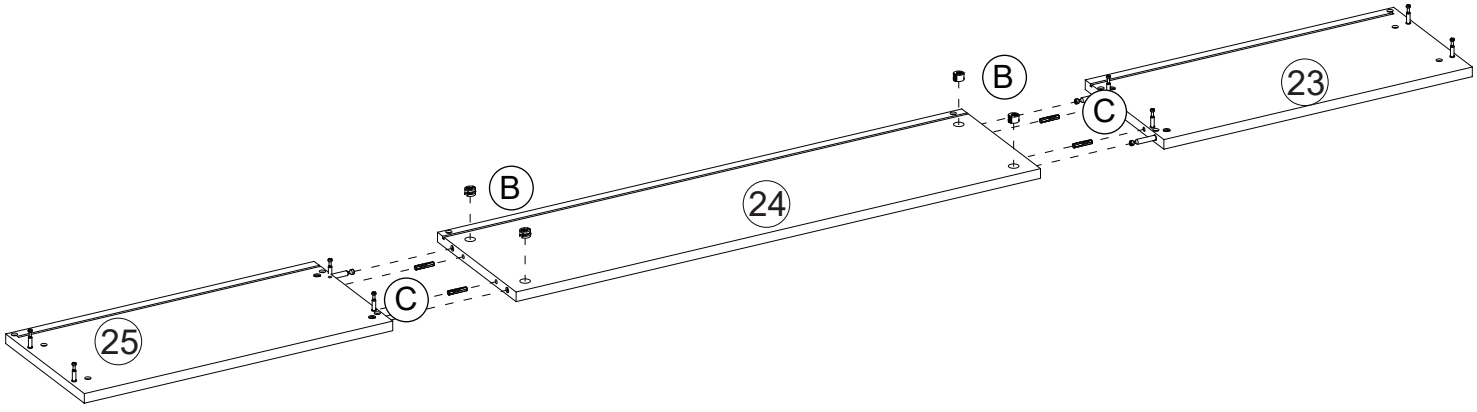

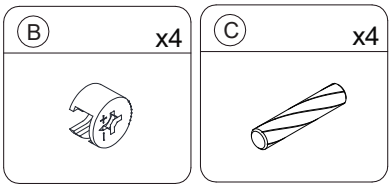

43

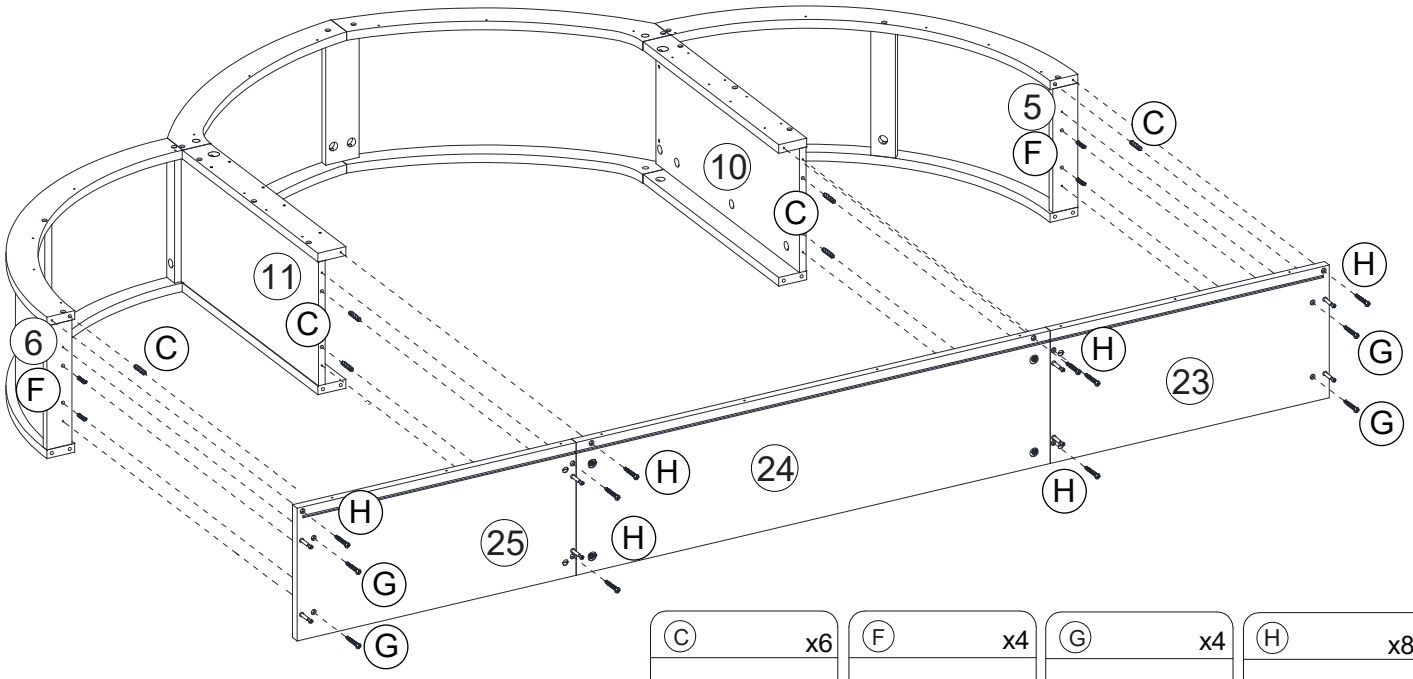
5
C
F
10
C
11
C
6
C
F
H
G
H
23
G
H
24
H
25
H
G
G

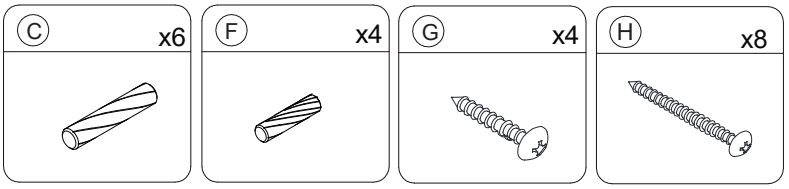
C x6
F x4
G x4
H x8

44

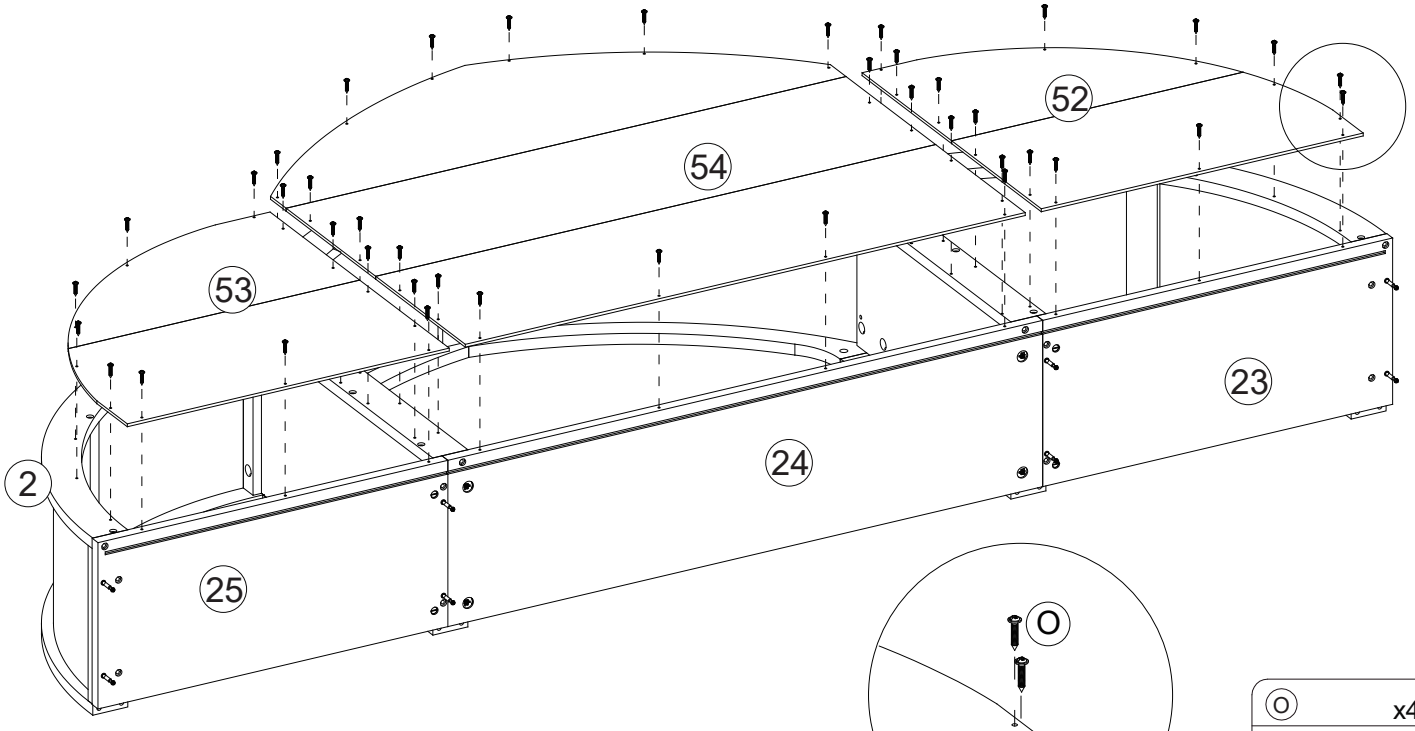
52
54
53
23
2
24
25

O

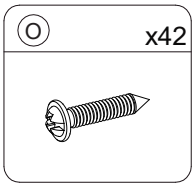
O x42

45

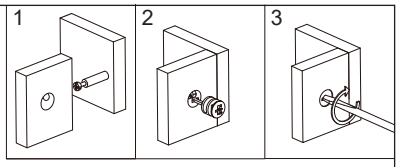

Cam Lock Fastening System

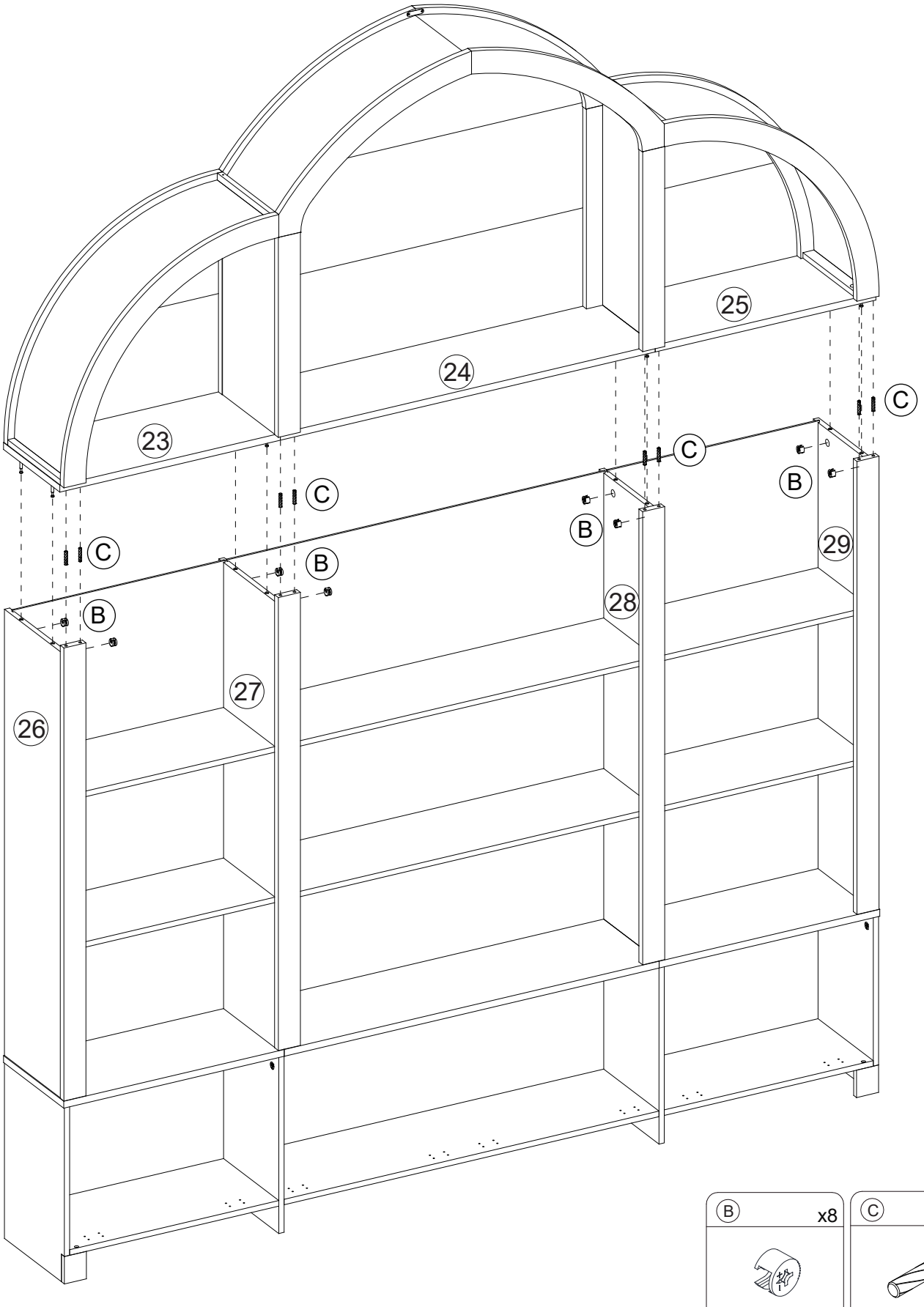

46

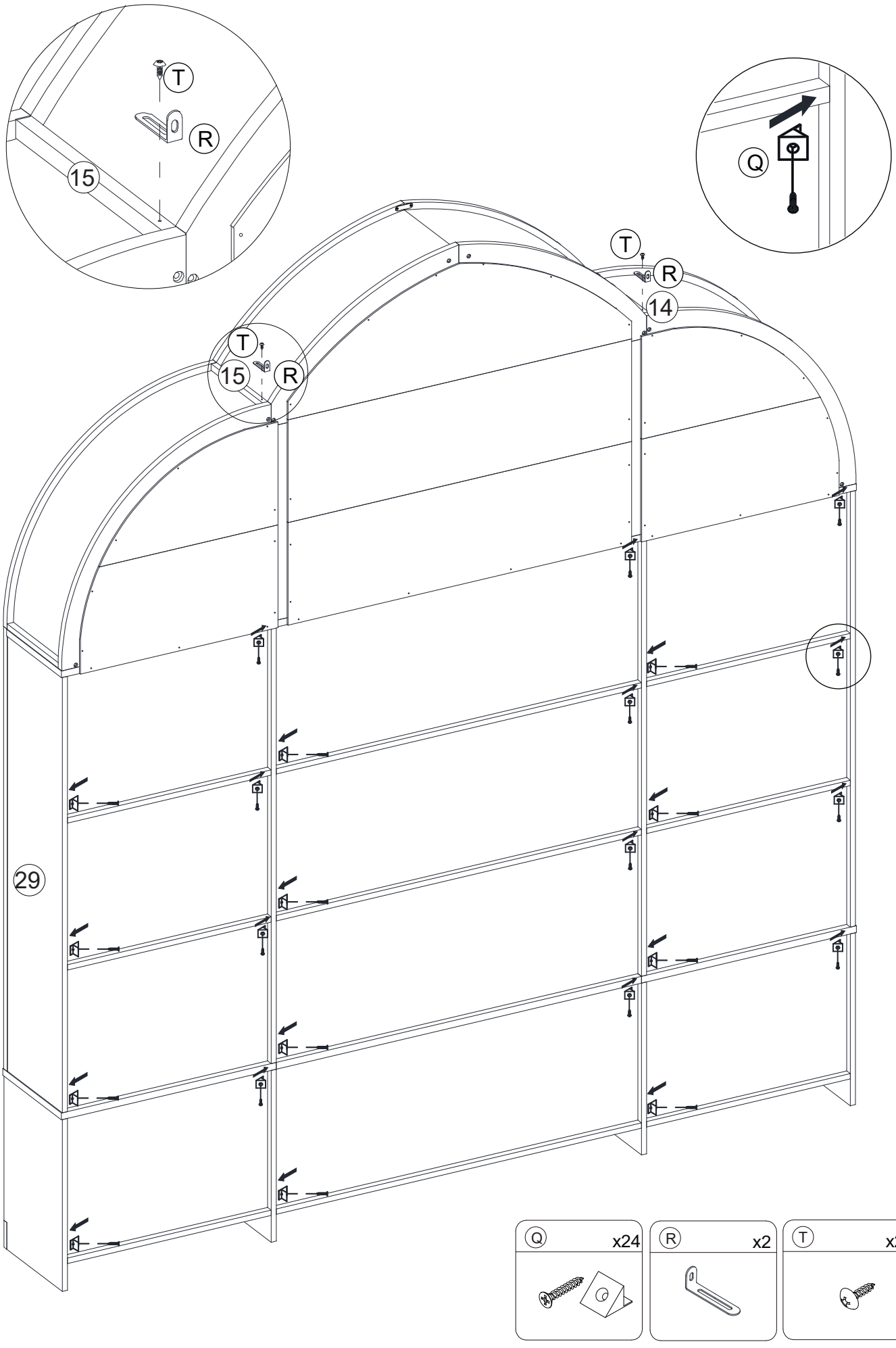

Q	x24

R	x2

T	x2

47

Drill a hole on the wall at the required position for anti-falling device installation.

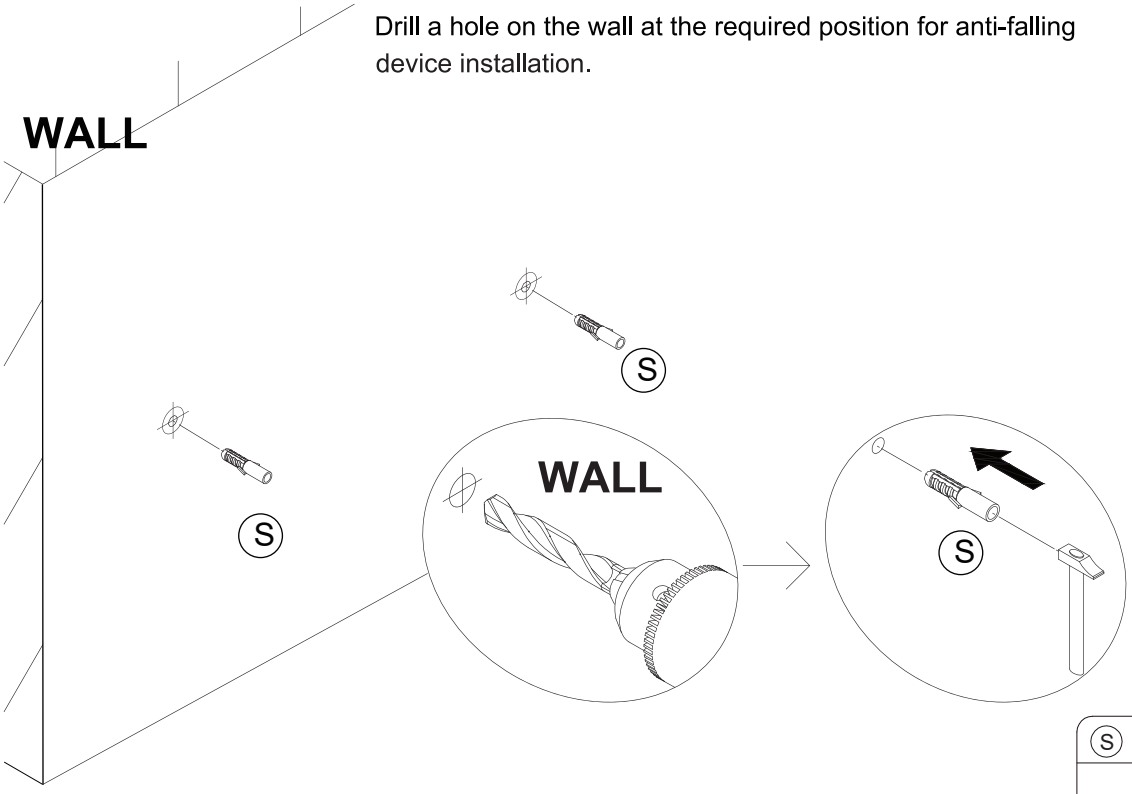

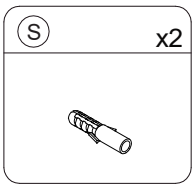

48

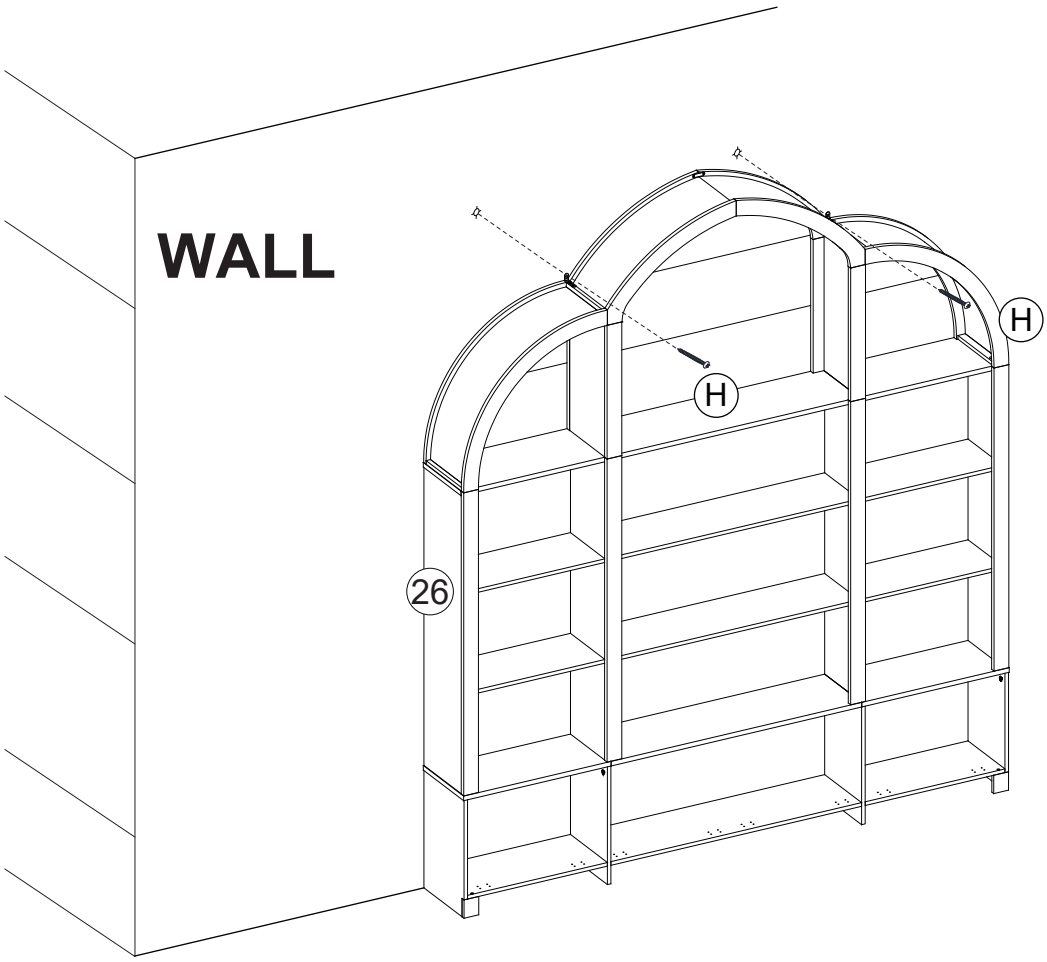

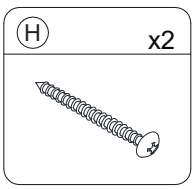

49

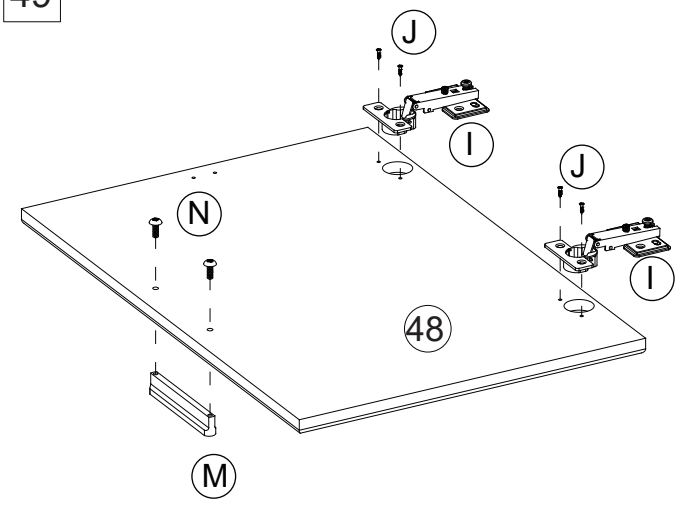

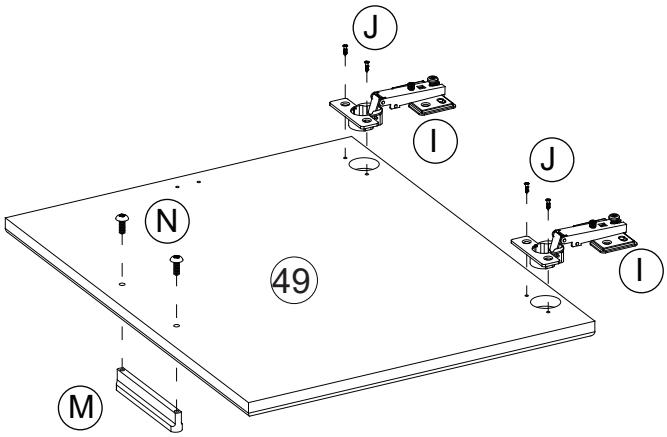

I	J	M	N
x4	x8	x2	x4

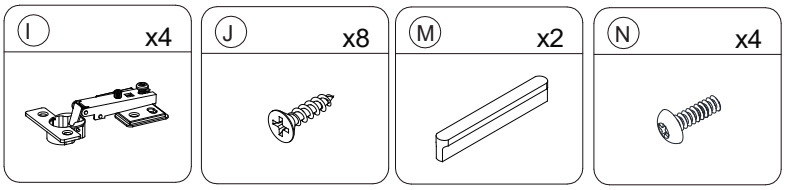

50

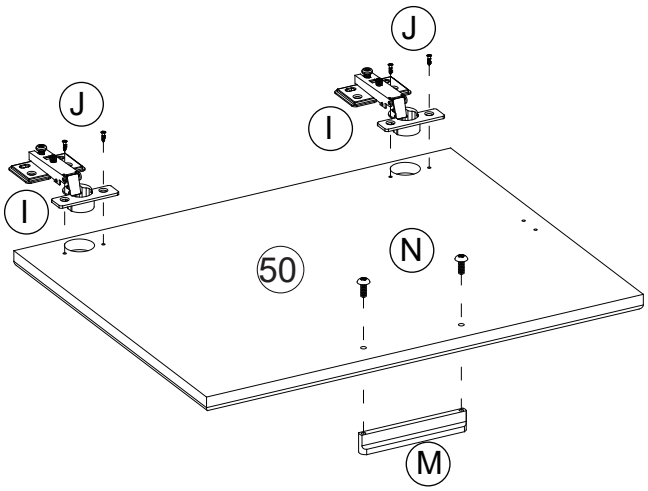

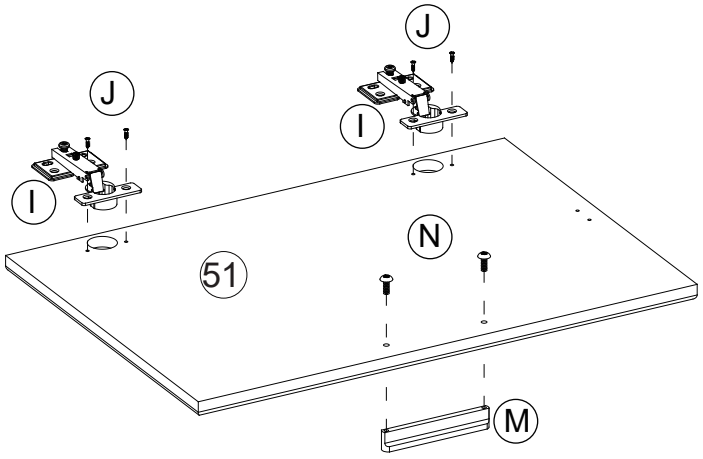

I	J	M	N
x4	x8	x2	x4

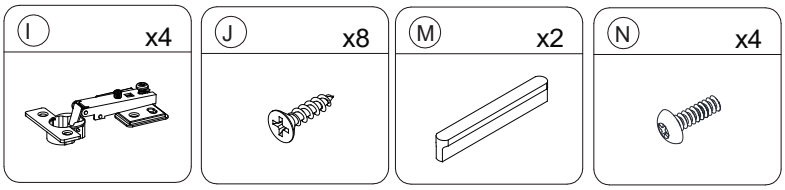

51

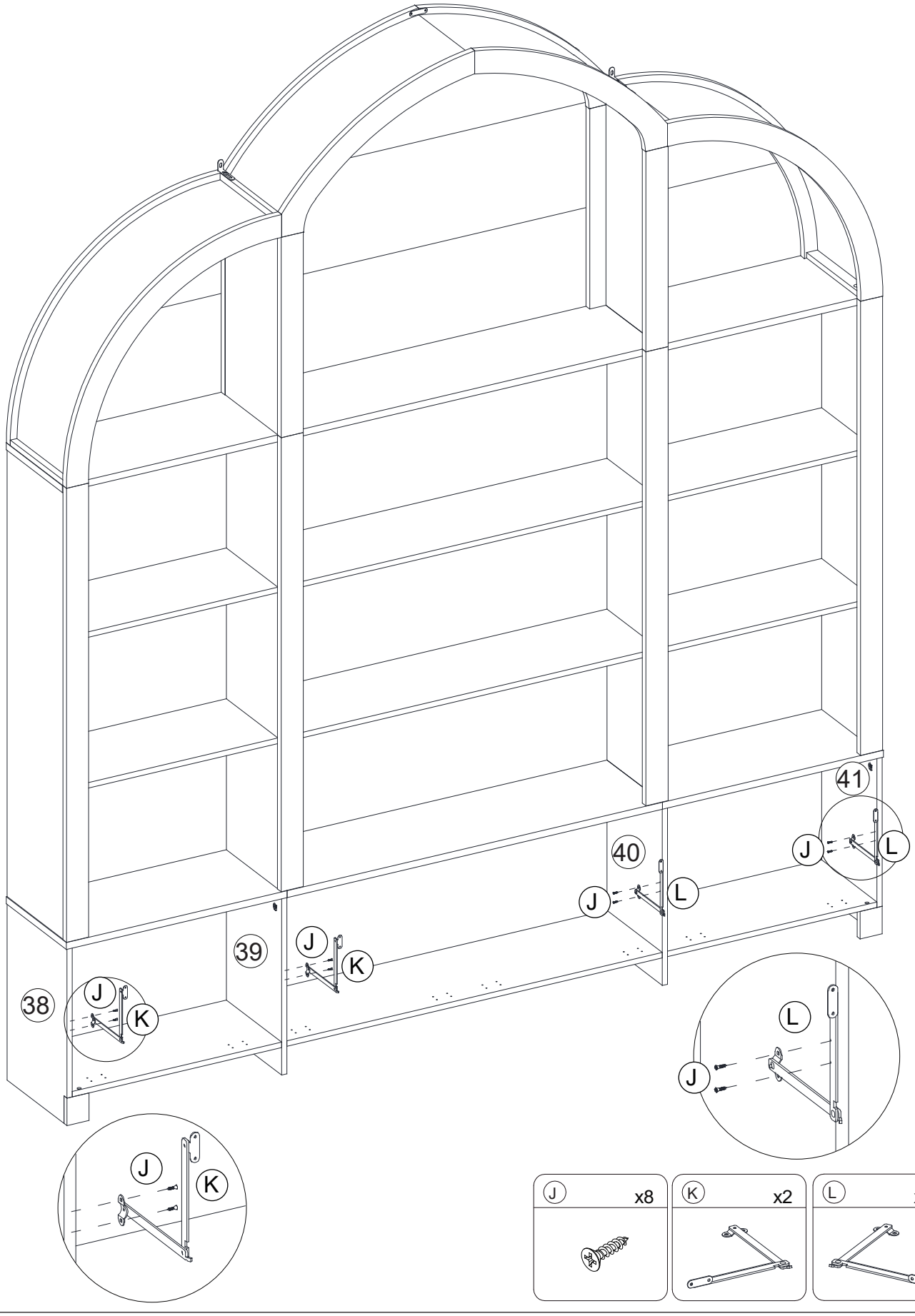

52

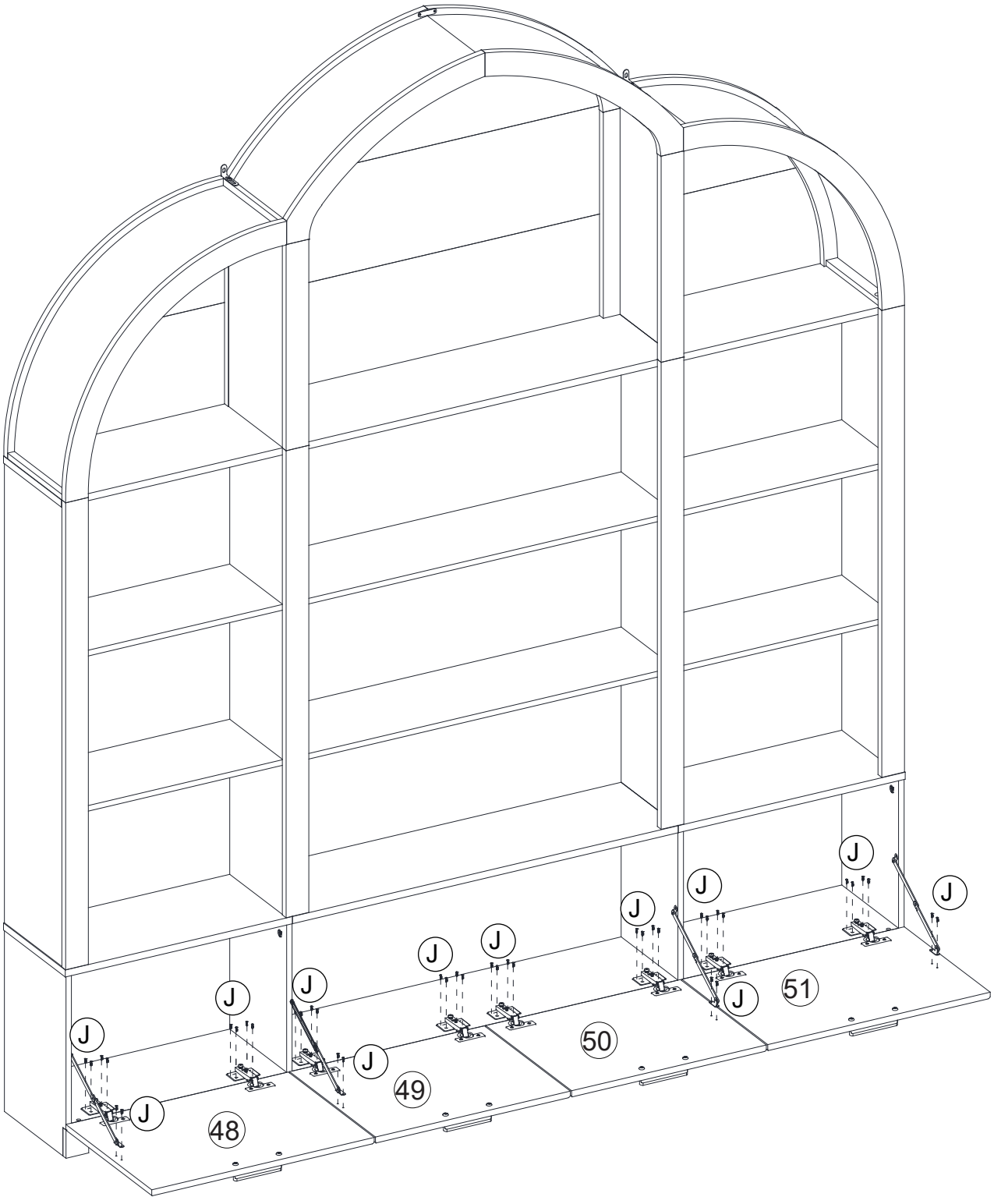

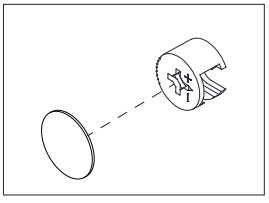

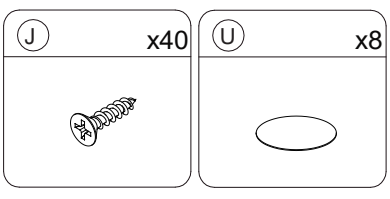

The ways to adjust the door

- Before adjusting the hinge, please check whether the cabinet is skewed.
- If the skew can not be repaired, please remove the anti-tipping device first, then adjust the cabinet to vertical position.
  Please adjust the hinge with the door open.
- Please operate it with more than 2 people, one person holds
- the door and the other one adjusts the screw.

Components Name

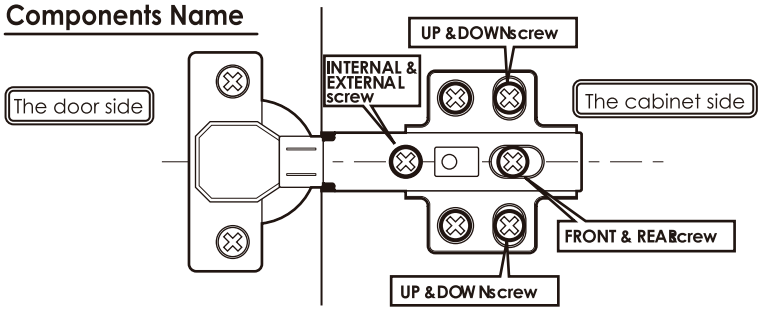

Obvious gaps between doors or Doors don't look closed

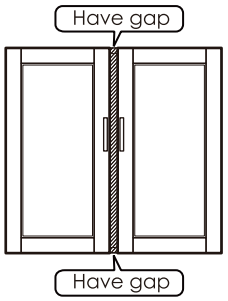

1 Turn "internal & external screw" to the right can make the door approach inside.
Please adjust the doors little by little.

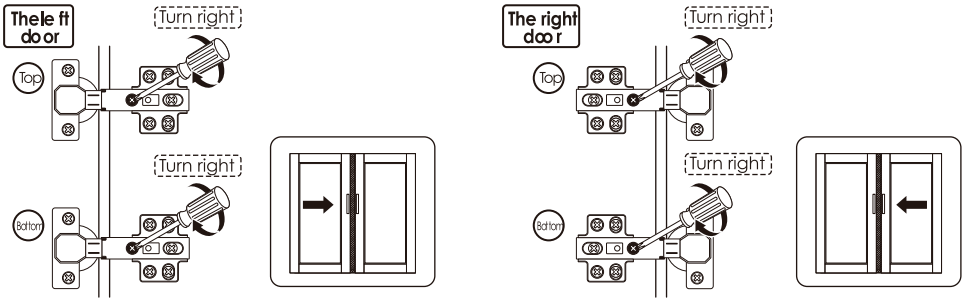

※ If the 2 doors are overlap, please turn the "internal & external screw" to the left.

When door is crooked



Please take the following steps to adjust first.

1 Rotate the "front and rear screws" to the left

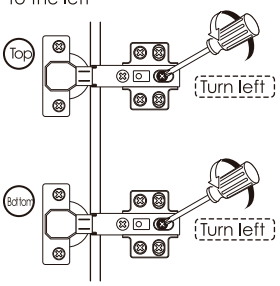

※ After adjusting the "front and rear screw", the door still does not change, please turn the "internal & external screw" to the right Slightly.

2 Push the door to the cabinet

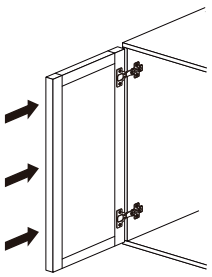

3 Rotate the "front and rear screws" to the right

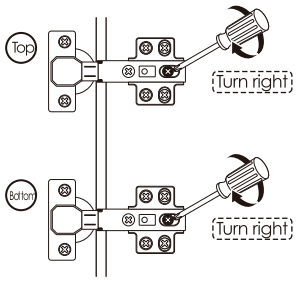

When door is leaning

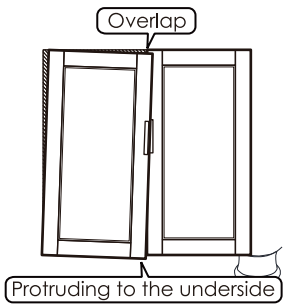

1 Turn "internal & external screw" to the left can make the top of the door tilted outward.

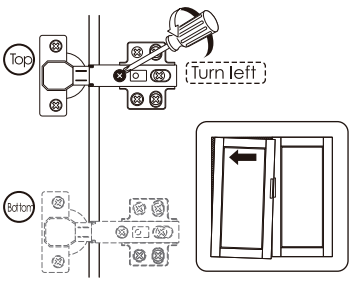

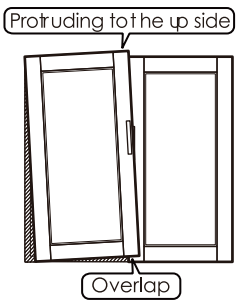

1 Turn "internal & external screw" to the left can make the bottom of the door tilted outward.

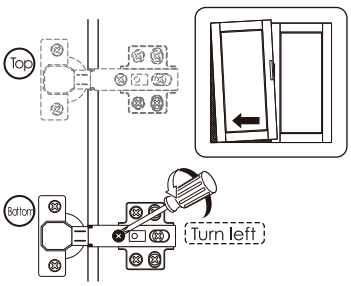

When the door is higher on top

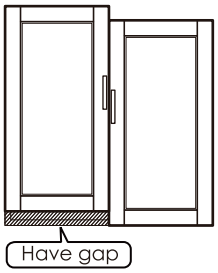

1 Turn "up & down screw" to the left

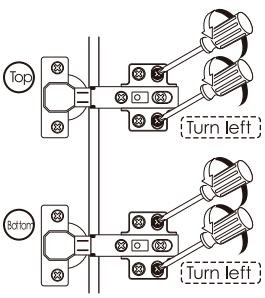

2 Lower the door's height so that 2 doors are of the same height.

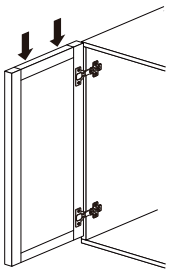

3 Turn "up & down screw" to the right

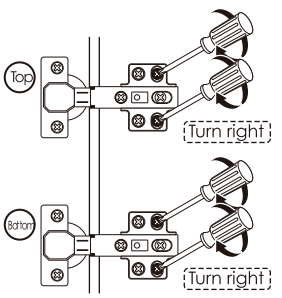

※ If the door is lower on bottom, please lift up the left door slightly on step 2

A Guide to Wall Mounting & Fixings

Important note:

If plastic wall plugs (rawl plugs) are supplied with your product, eg:



- these are suitable for use in masonry walls

If you are in any doubt about the correct wall plugs for your wall, seek professional advice.

Failure of the product due to using the incorrect fixings is the responsibility of the installer.

Important: when drilling into walls always check that there are no hidden wires or pipes etc.

Make sure that the screws and wall plugs being used are suitable for supporting your unit. Consult a qualified tradesperson if you are unsure.

Hints:

1. General rule: always use a larger screw and wall plug if you are not sure.
2. Ensure you use the recommended drill bit to match the wall plug and hole size.
3. Ensure you drill the hole horizontally; do not force the drill or enlarge the hole.
4. Take extra care when drilling high walls, ceilings and ceramic tiles. Ensure wall plugs are inserted beyond the thickness of the ceramic tiles to avoid the tiles splitting or cracking.
5. Ensure wall plugs are well fitted and are a tight fit in the drilled hole.

Types of walls

You can use one of the following types of wall plug if your walls are made of brick, breeze block, concrete, stone or wood.

No. 1 “General Purpose” wall plug

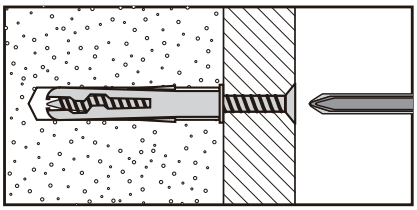

Generally aerated blocks should not be used to support heavy loads, use a specialist fitting in this case. For light loads, general purpose wall plugs can be used.

No. 3 “Cavity Fixing” wall plug

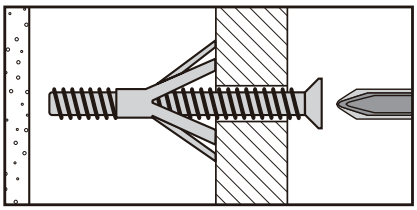

For use with plasterboard partitions or hollow wooden doors.

No. 5 “Hammer Fixing” wall plug

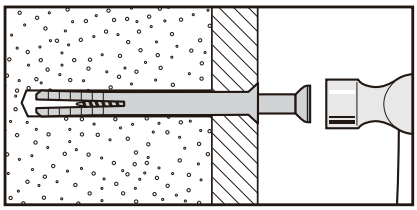

For use with walls stuck with plasterboard. The hammer fixing allows it to be fixed to the wall rather than the plasterboard. Always check the fixing is secure to the retaining wall.

No. 2 “Plasterboard” wall plug

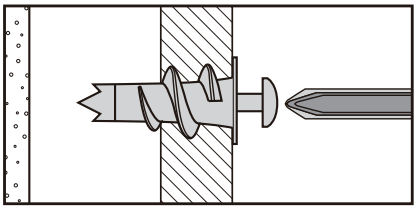

For use when attaching light loads onto plasterboard partitions.

No. 4 “Cavity Fixing - Heavy Duty” wall plug

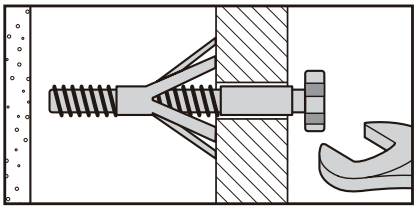

For use when fitting or supporting heavy loads such as shelving, wall cabinets and coat racks.

No. 6 “Shield Anchor” wall plug - heavy loads

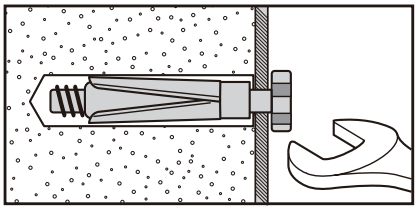

For use with heavier loads such as TV and HiFi speakers and satelite dishes etc.

Care & Maintenance

Safety: Always check the fitting and location to ensure your safety in and around the home.

Fitting: From time to time check the fitting to ensure the wall plugs or screws do not become loose.