KS8120,1,2,3,5,6,7,8ML
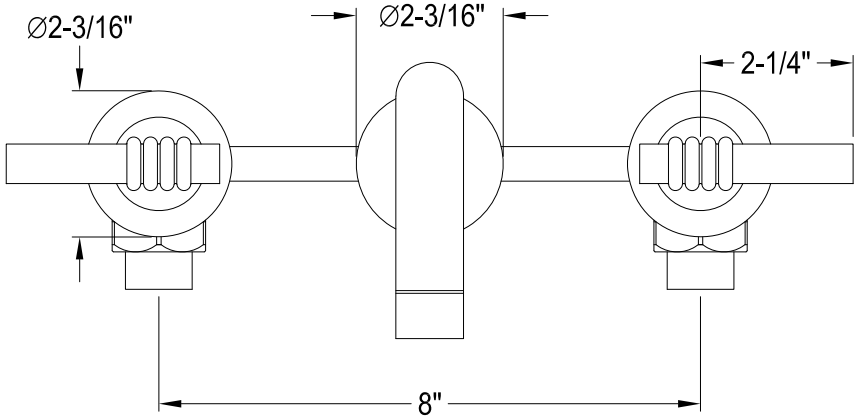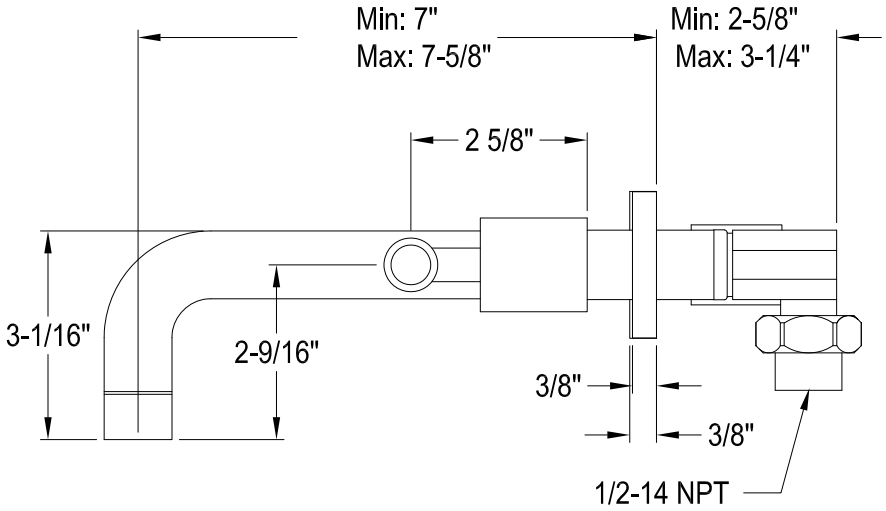
Twin Handles Wall Mount Bathroom Faucet