THANKS FOR WATCHING

Your feedback is invaluable to us and we would love to hear about your experience. Please take the time to leave us a review.

Installation Manual- MC250I

MOTIVATE YOUR LIFE !

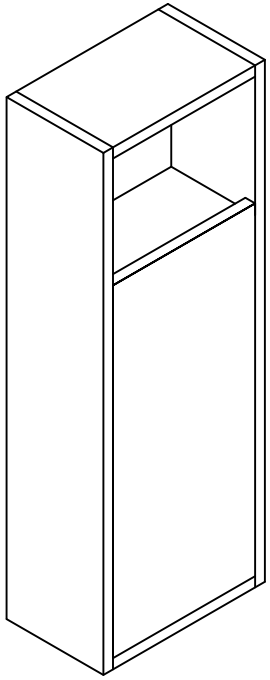

Thank you for shopping with us!

We encourage you to take a few minutes to go through this booklet. It contains important information on installation and care tips to keep your furniture looking as good as new.

Item NO.: MC250I

Hardware

NO.	Draw	QTY
A	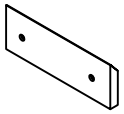 45 degree wall hanging strip	2
B	Plastic anchor(Ø6mm)	4
C	(Ø4 x 45mm) Screws for fix on the wall	4

Dimensions

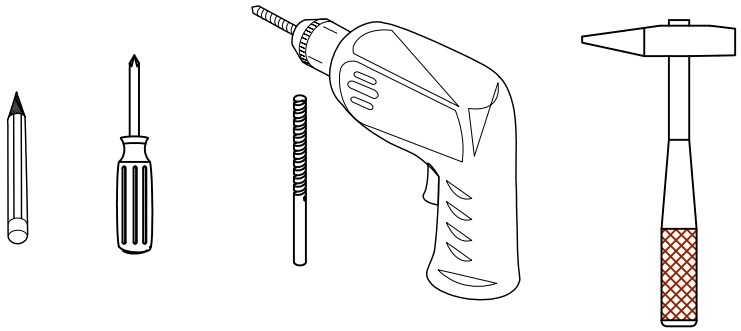

Dimensions

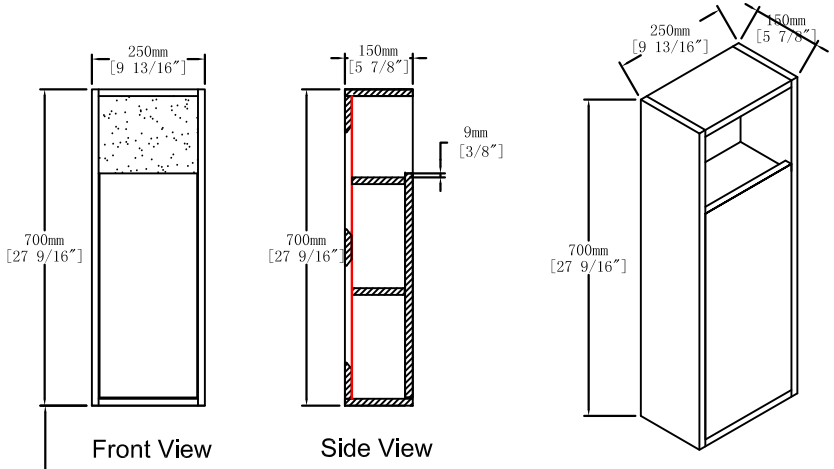

Note:The installation direction of the side cabinet can be adjusted according to your own needs.

1150mm
[45 1/4″]

The installation height can be adjusted according to personal needs

Floor

CARE CLEANING AND MAINTENANCE

1.Dust regularly with a soft , dry cloth.

2.Avoid the use of all chemicals household cleaners, abrasives, or cleaners that contain lemon, vinegar, or other acids that may damage the finish.

3.Excessive exposure to sunlight and extreme changes in temperature and moisture can damage wood furniture.

4.Do not place hot appliances, such as curling irons and hot hair dryers directly on the countertop. Wipe spills immediately.

Coverage Distance

Rotate screw to the right:Coverage distance decrease（-）
Rotate screw to the left:Coverage distance decrease（+）

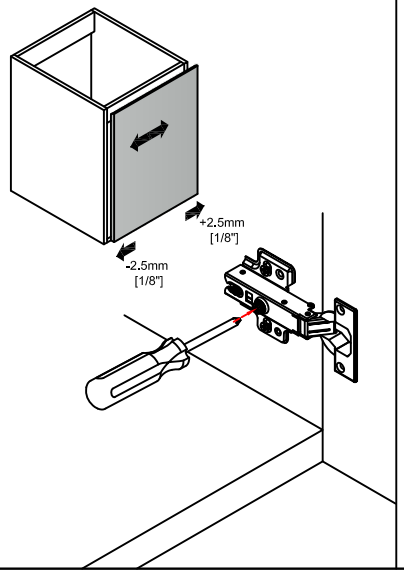

Depth Distance

Release the screw, adjust the distance between the door & vanity and tighten the fastening screw.

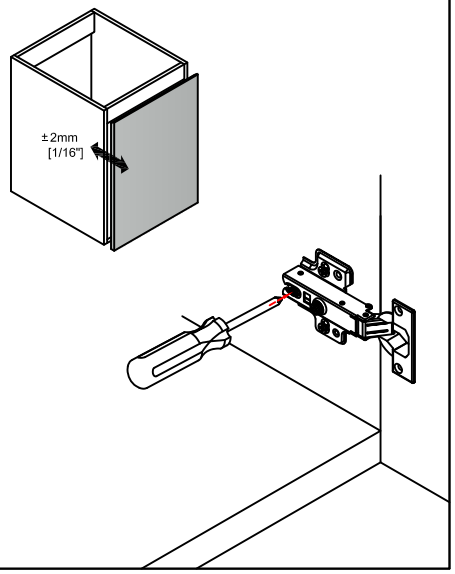

Height Distance

Release the base screw, adjust the height of the door, and then tighten the screw.

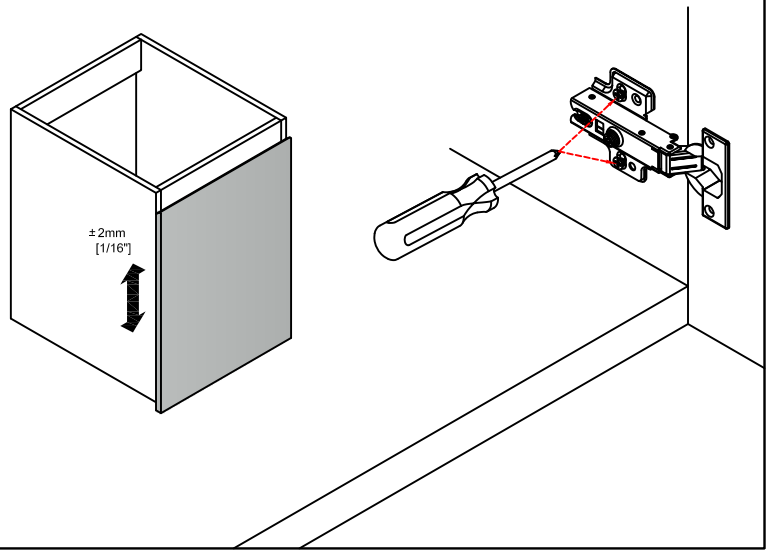

Step 1

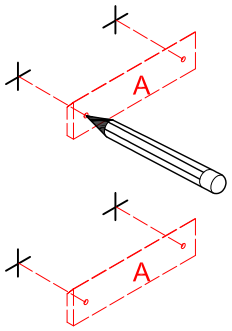

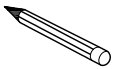

Tool

Step 2

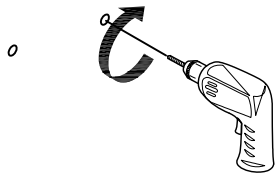

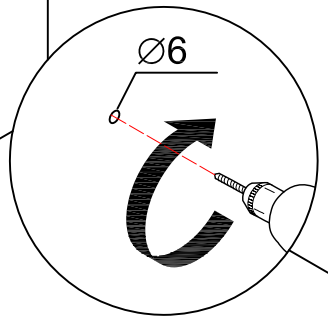

Step 3

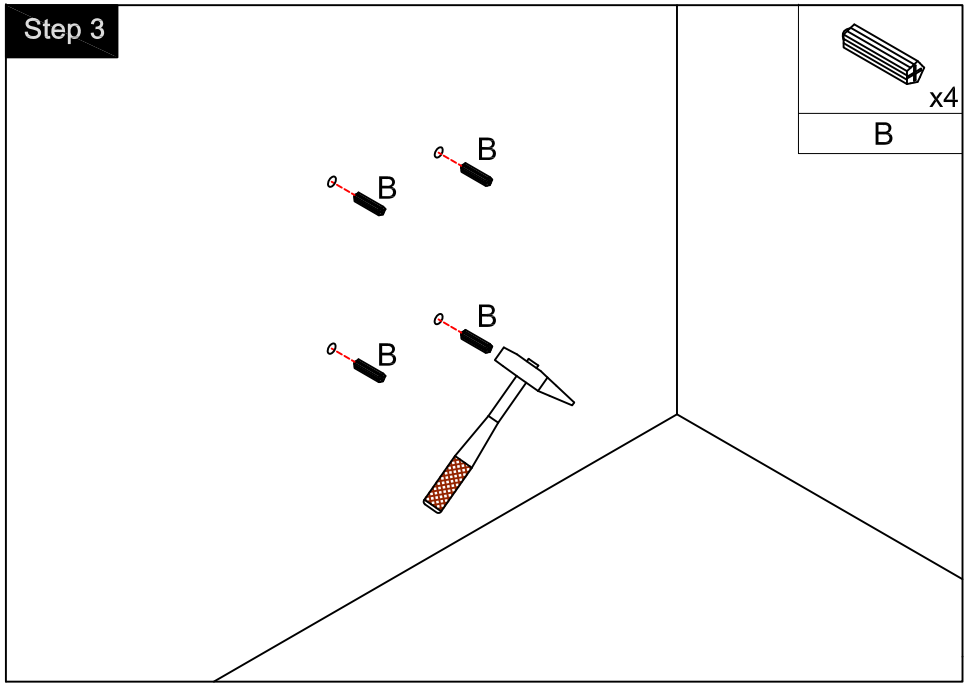

Step 4

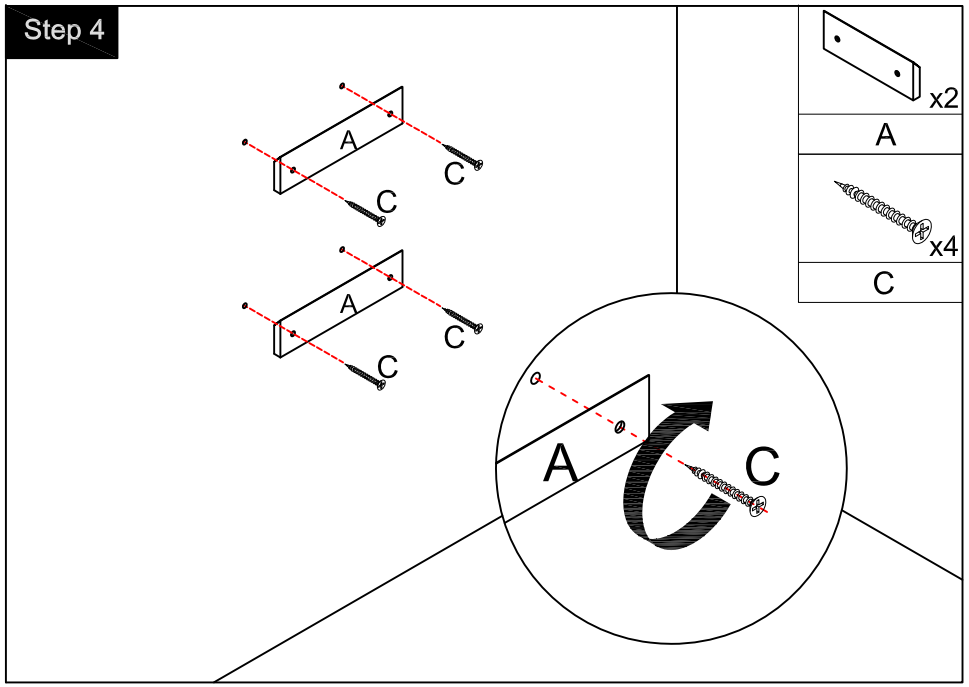

Finished

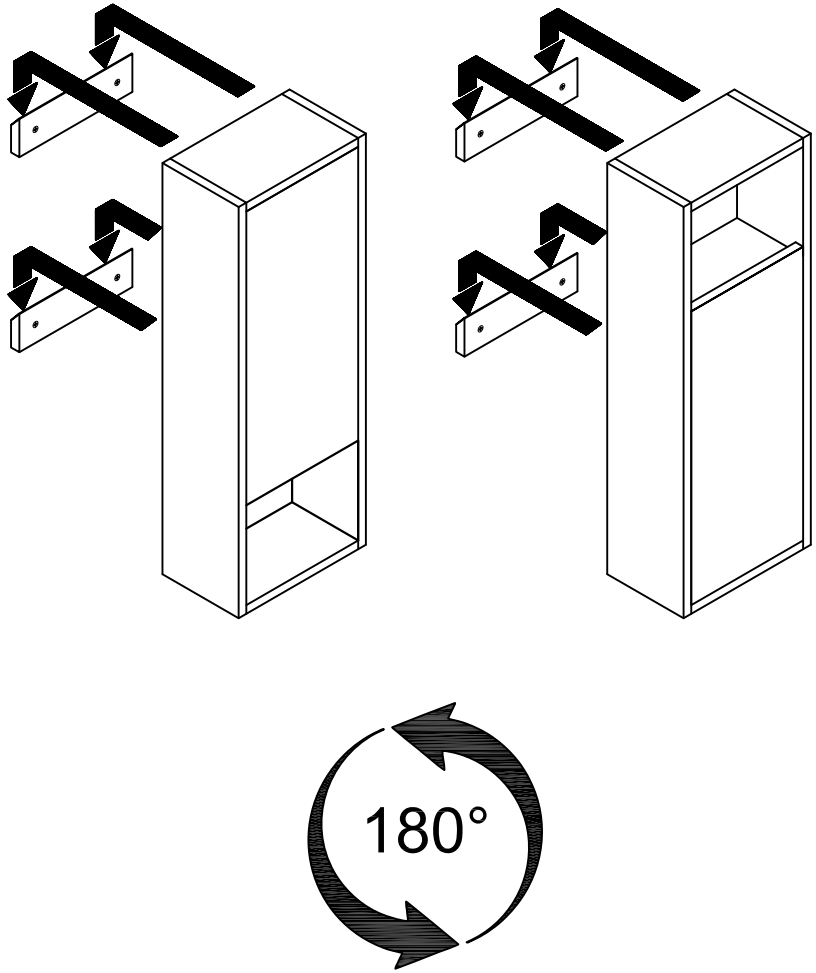

Note:Can rotate up and down 180 degrees to install wall mounted.