ASSEMBLY INSTRUCTION

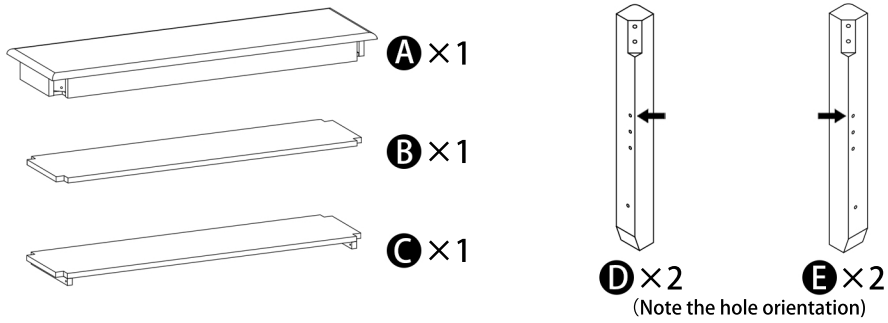

Hardware Parts	①×8	②×4	③×4	④×12	⑤×4	⑥×1

Installation Steps

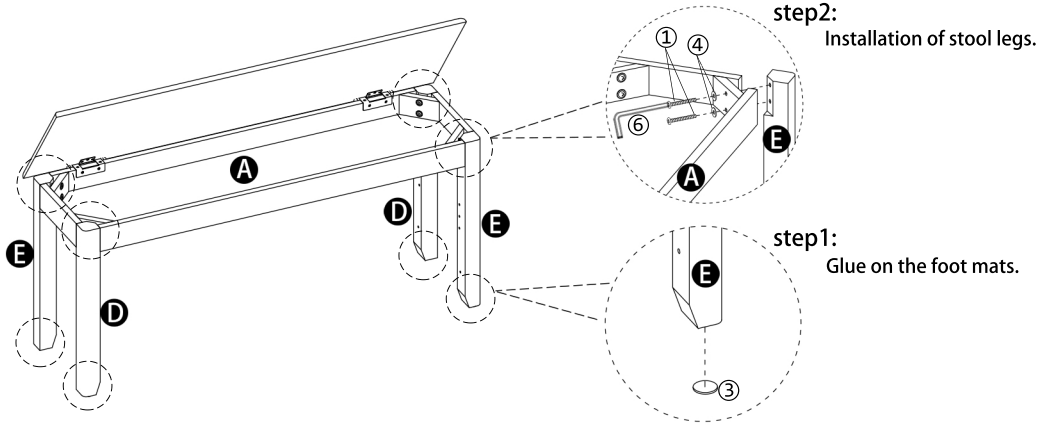

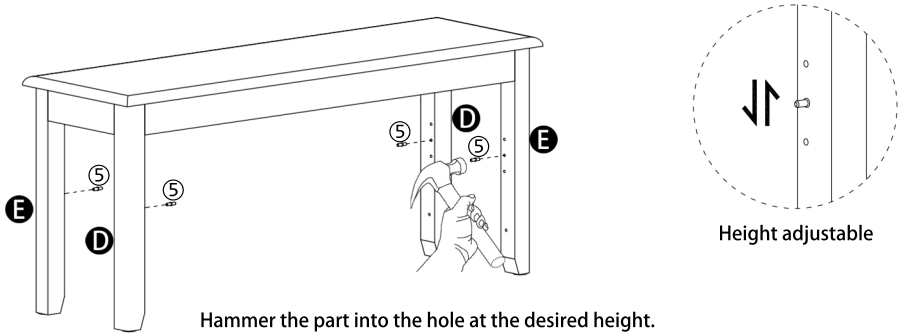

Installation Steps

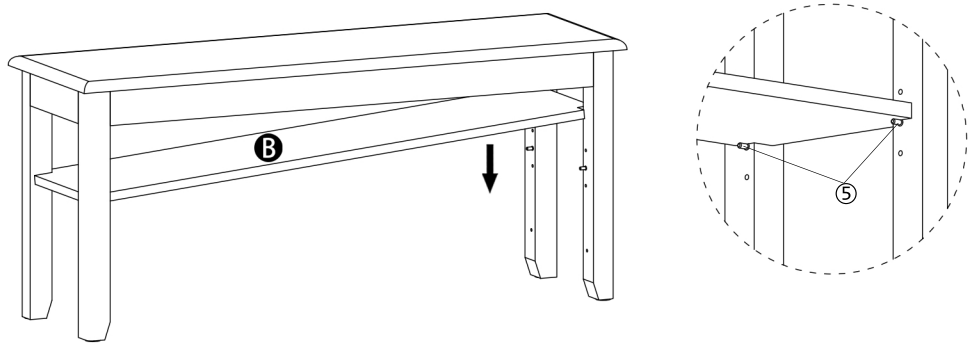

Place part B on part ⑤.

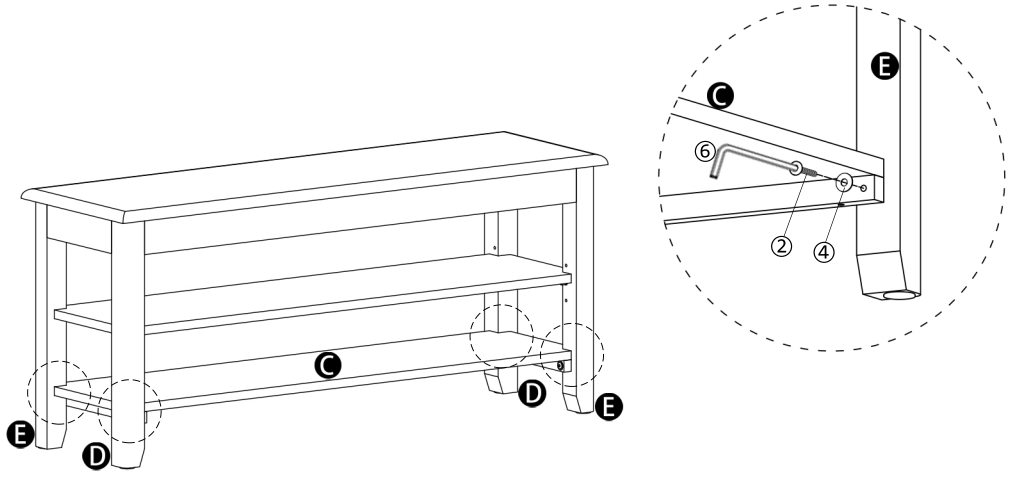

Screw parts C D E together with screwdriver ⑥.