INSTALLATION MANUAL

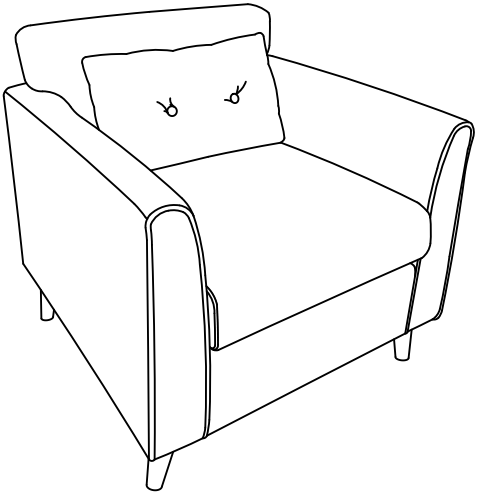

ITEM#: CHA-6592



Weight Limitation

300 LBS

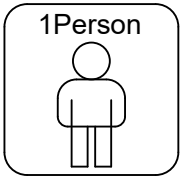

Support Service： **service@furnituresolve.com**

EXPLOSIVE VIEW

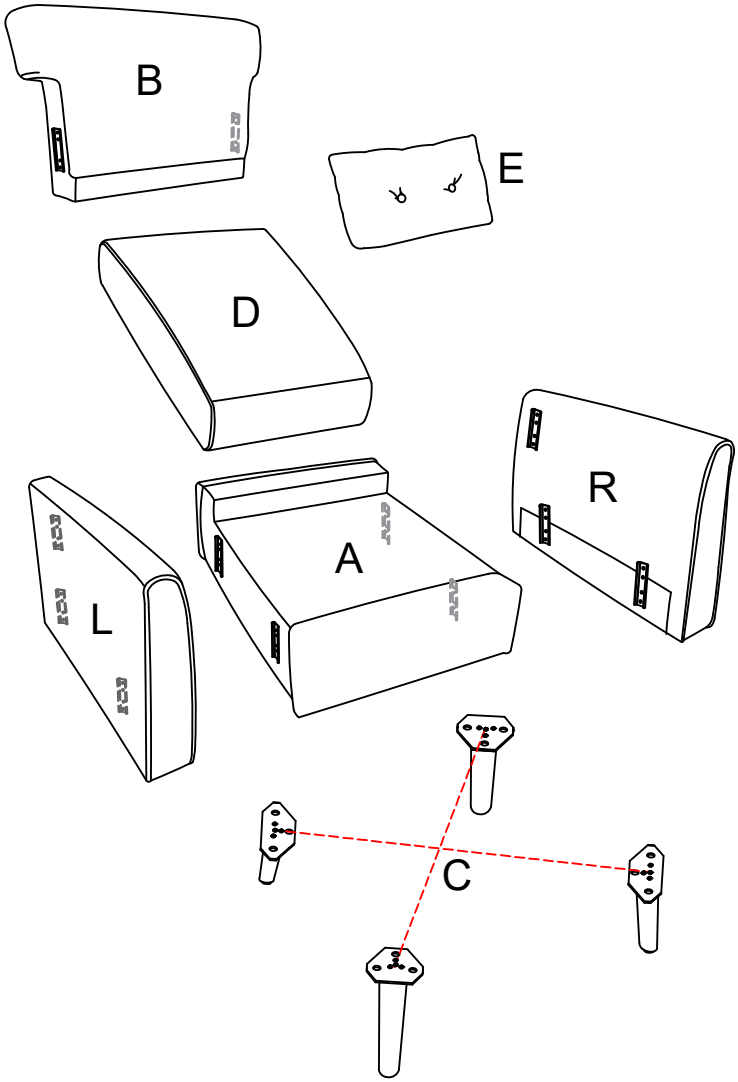

PARTS LIST

A	x 1

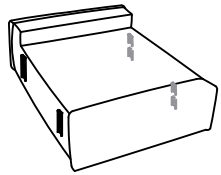

B	x 1

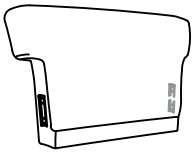

C	x 4

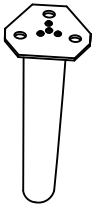

D	x 1

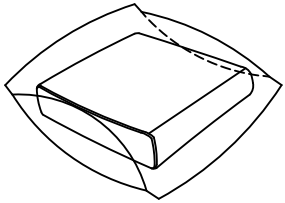

E	x 1

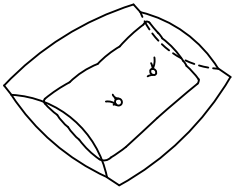

L	x 1

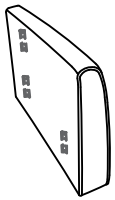

R	x 1

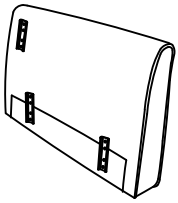

02/11

HARDWARE LIST

#1	x 12
	
Ø6x25mm	

#2	x 12
	
Ø6*Ø16*1	

#3	x 12
	
Ø6*Ø11*2	

TOOL LIST

#4	x 1
	
Ø5	

HARDWARE SPARE LIST

#1	x 1
	
Ø6x25mm	

#2	x 1
	
Ø6*Ø16*1	

#3	x 1
	
Ø6*Ø11*2	

ASSEMBLY INSTRUCTIONS

STEP-1

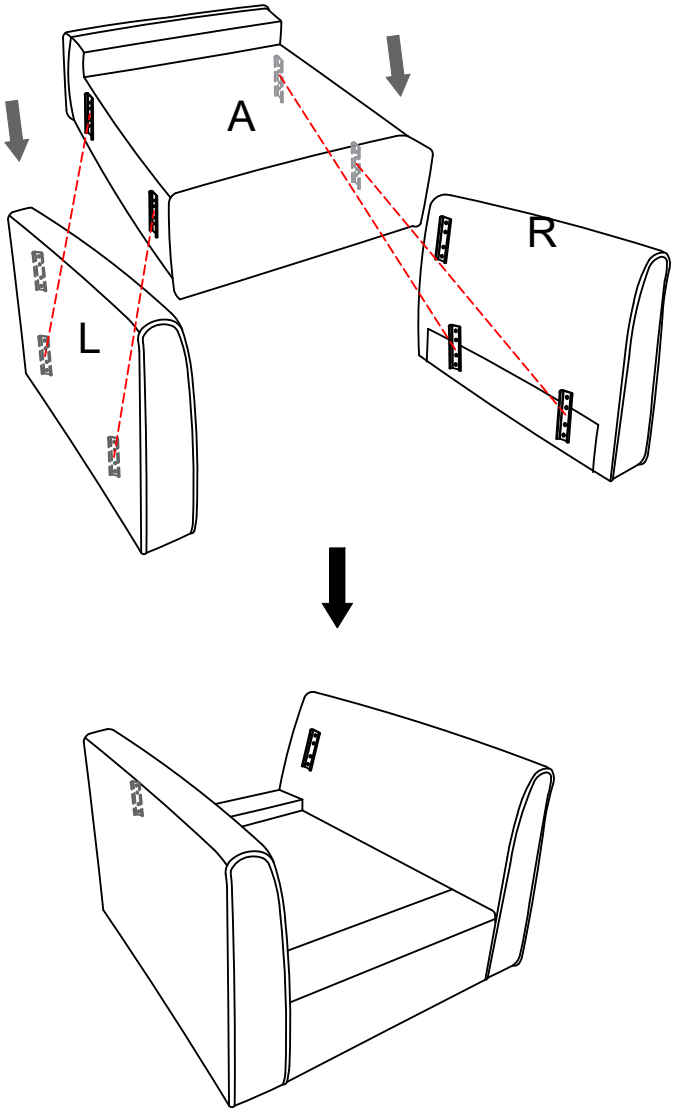

ASSEMBLY INSTRUCTIONS

STEP-2

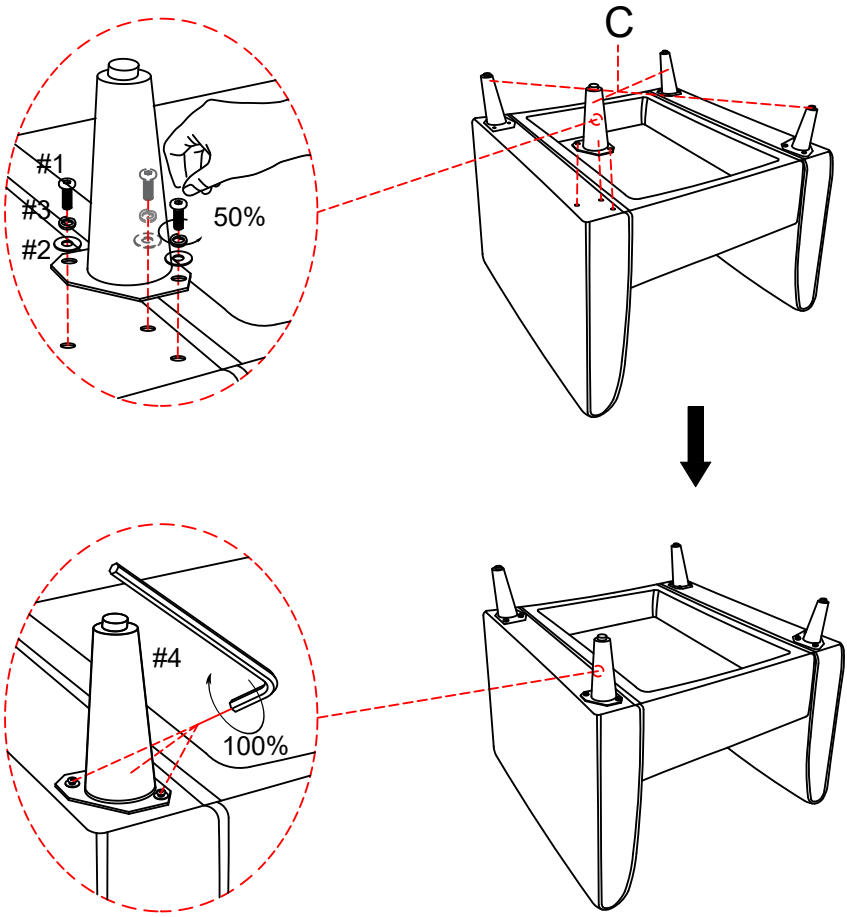

#1	x 12	#2	x 12	#3	x 12	#4	x 1
							
Ø6x25mm		Ø6*Ø16*1		Ø6*Ø11*2		Ø5	

05/11

ASSEMBLY INSTRUCTIONS

STEP-3

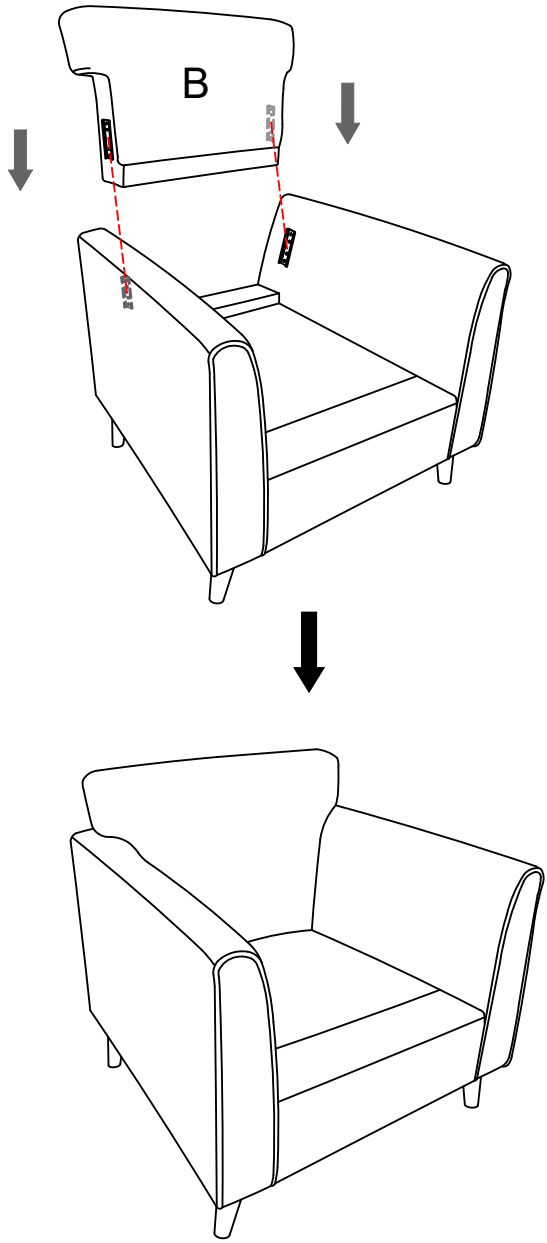

ASSEMBLY INSTRUCTIONS

STEP-4

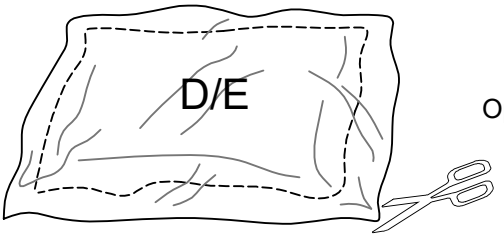

Open the vacuum bagcarefully.

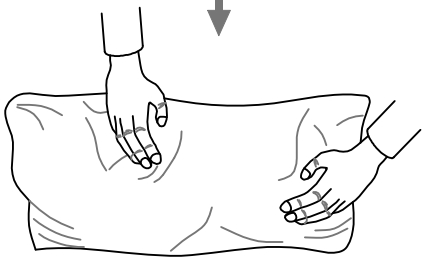

Press and tap withboth hands from theside to fully inhale air.

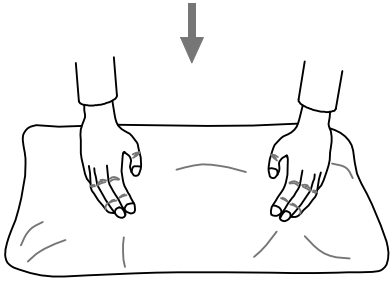

Press and tap with bothhands from the front tofully inflate.

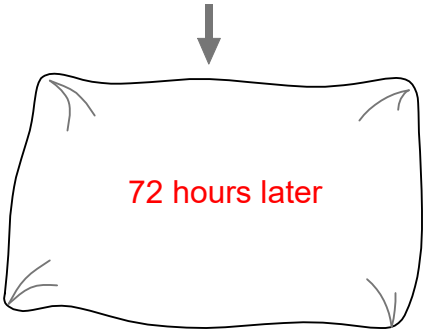

Carefully smooth out each section until thesurface is even.

07/11

ASSEMBLY INSTRUCTIONS

STEP-5

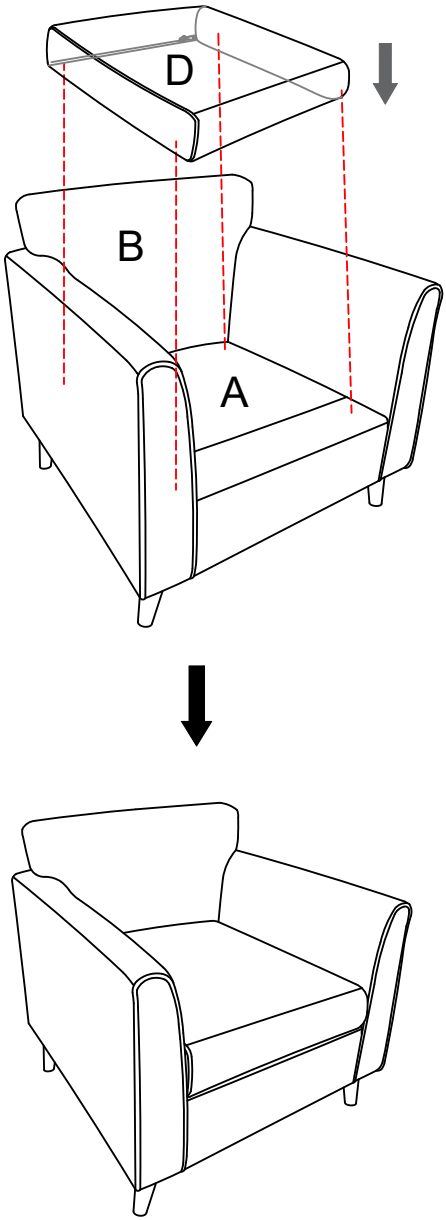

ASSEMBLY INSTRUCTIONS

STEP-6

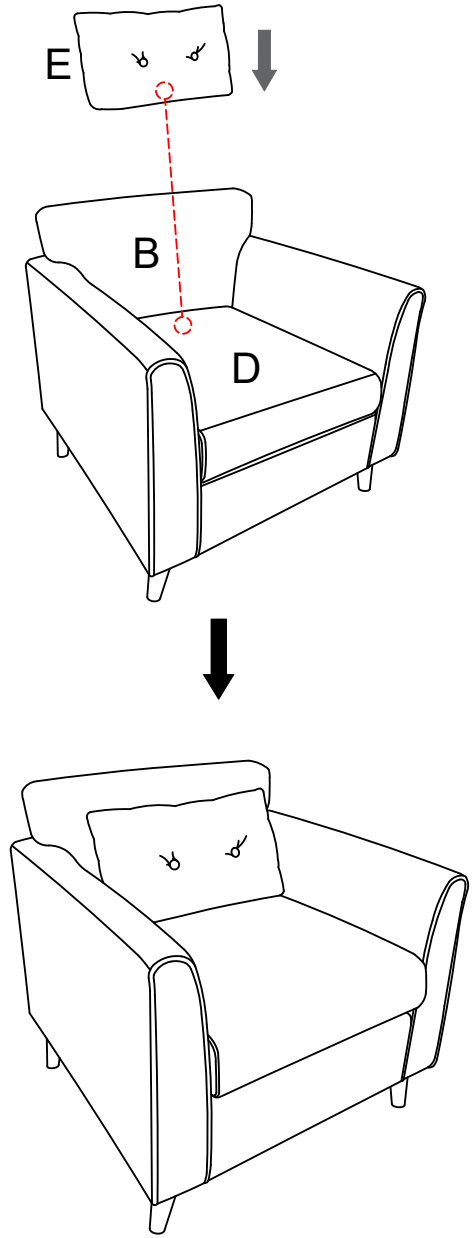

ASSEMBLY INSTRUCTIONS
STEP-7

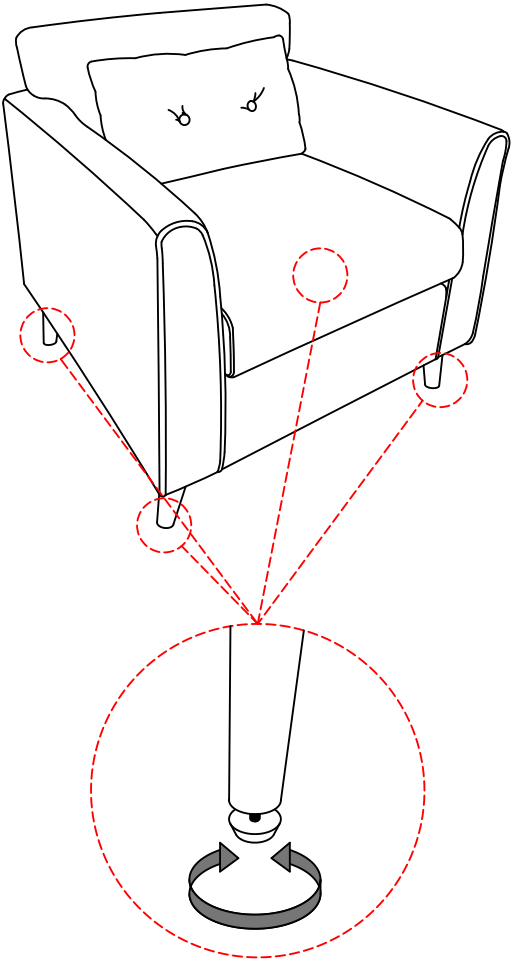

You can adjust the legs
when it is not flat

ATTENTION

1.When assembling and using this product, basic safety precautions should always be followed to reduce the risk of personal injury and damage to equipment. Please read all instructions before assembly and use.

2.Check all bolts for tightness before and during usage.

3.Colors may vary slightly from the photo because of photography and printing.

MAINTAINANCE AND WARNING

1. Keep Furniture away from heat sources.

2.Check bolts/screws periodically and tighten them if necessary.

3.This unit is intended for use only with the products and/or maximum weights indicated. Use with other products and/or products heavier than the maximum weights indicated may result in instability or cause possible injury tolerances.

4.Do not clean furniture with harsh cleaner or polishes.Do not use detergents, Solvents, abrasives,spray packs or leather cleaner. Use non-color mild soa with warm water to clean spills(Mix 1:10 soap to water).

5.Do not place furniture under direct sunlight,material will possibly fade over time.

6.Do not use on site dry cleaning machine.Children should not climb or jump on the furniture.

7.Do not write on furniture that is not protected by a padded barrier.

WARRANTY

1.Our commitment is to deliver exceptional products and ensure the utmost satisfaction for every customer. We go the extra mile to meet your specific product or service needs.

2. Enjoy a worry-free experience with our 30-day warranty, starting from the moment your item is received. To facilitate any warranty claims, kindly provide your order details, such as the order number or item receipt. Even if your item is beyond the warranty period, we are still here to assist you.

3. Find replacement parts effortlessly by purchasing them directly from our company, subject to availability.

Encountering assembly challenges or missing parts? Reach out to us via email at **service@furnituresolve.com** , including your order number. We are here to help!

For returns, please refer to the return policy of the retailer or marketplace where you made your purchase.

Thank you for choosing our products.

Elevate your living space with our unique furniture pieces!