OWNER'S MANUAL

6-Person Patio Dining Table

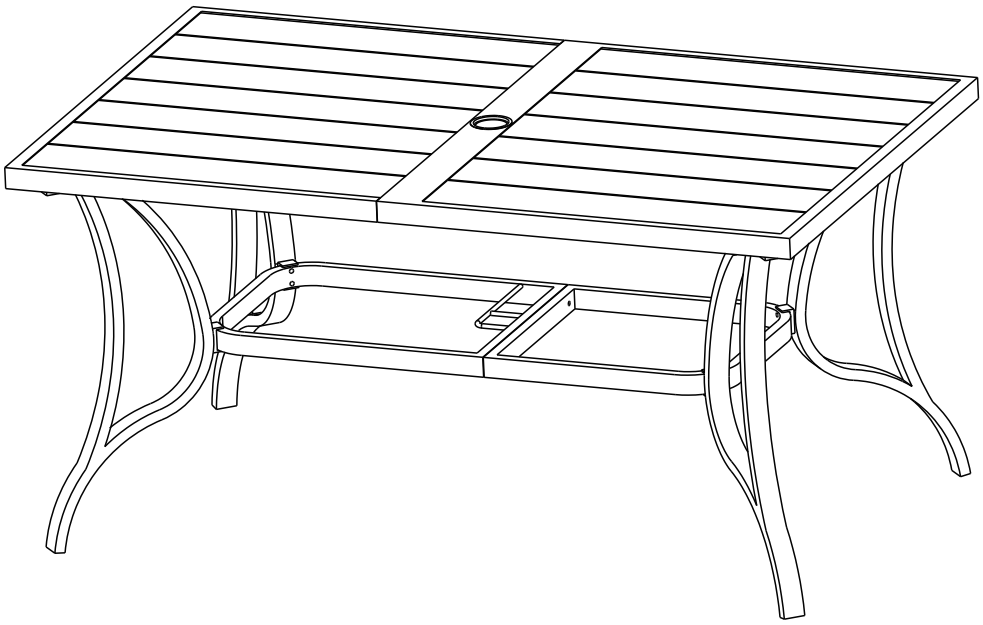

Contact Us

If you have any questions,
Please contact customer service.

SAFETY PRECAUTIONS

WARNING



Please read and understand this entire manual before attempting to assemble or install the product.



Some parts may have sharp edges. Please wear protective gloves when assemble or install the product.



Assemble the item on a soft, non-abrasive surface to avoid damage, such as carpeting.



Keep all the children and pets away from assembly area. Children and pets should be supervised when they are in the area of the dining set construction.

CAUTION

- Please do not exceed the weight limitations of this item.
- Firmly secure all bolts, screws and knobs before use. Reconfirm that all bolts, screws, and knobs are secure every 90 days.
- Do not use or store this item in the proximity of open flame or flammable/combustible chemicals.
- If any parts are missing, broken, damaged, or worn, stop using this product until repairs are made and/or factory replacement parts are installed.

ATTENTION

- Check every part with the part list before assembly. If any part is missing or damaged, do not attempt to assemble the product and contact us immediately.
- We care about every customer's experience. Please feel free to contact us if you have any advice. We will offer you efficient solutions ASAP.
- We recommend you to use waterproof furniture cover for the entire patio dining set when out of use to keep them longer performance.
- You could adjust the foot leveler to keep table or chair in balance.

WARRANTY COVERAGE REQUIREMENTS

- Pictures of the damaged parts. The order number of your product.
- Please gather all of this information BEFORE you contact us.
- Do not use this item in a way inconsistent with the manufacturer's instructions as this could void the product warranty.

PRODUCT WARRANTY INSTRUCTION

Free Warranty Period:

The free warranty period starts from the product receipt date and lasts one year.

Coverage during the Free Warranty Period:

1. If any components of the purchased product are damaged due to non-human-induced reasons natural wear and tear excluded , corresponding new parts will be replaced free of charge.

2. If the entire purchased product is damaged due to non-human -induced reasons natural wear and tear excluded and cannot be further used, corresponding parts or a brand-new product will be replaced free of charge.

Coverage after the Free Warranty Period:

After the warranty period expires, replacement components will be provided to customers at cost price for continued service.

Additional Services:

After purchasing the product, customers can consult our staff for any product-related inquiries.

ACCESSORIES DISPLAY

Part List

A
Retaining (Left)
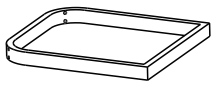
1PC

B
Retaining (Right)
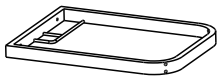
1PC

C
Table Top (Left)
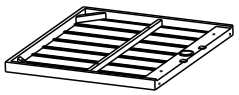
1PC

D
Table Top (Right)
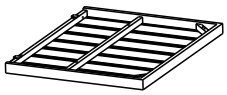
1PC

E
Table Leg

4PC

F
Support Tube

2PC

G
M6X35MM Bolt
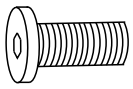
18PC

H
M6X50MM Bolt
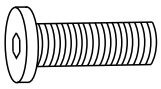
2PC

I
M6X55MM Bolt
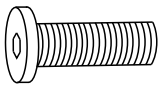
8PC

J
Steel Washer
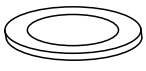
34PC

K
Nut

2PC

L
Allen Key
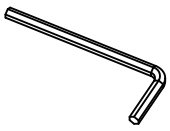
1PC

M
Nut Wrench

1PC

PRODUCT ASSEMBLY

STEP 1

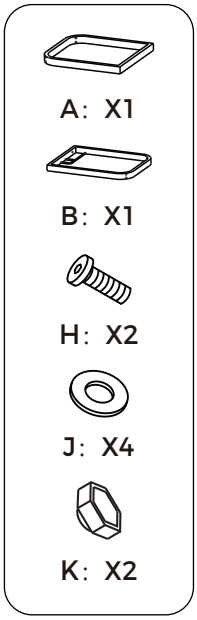

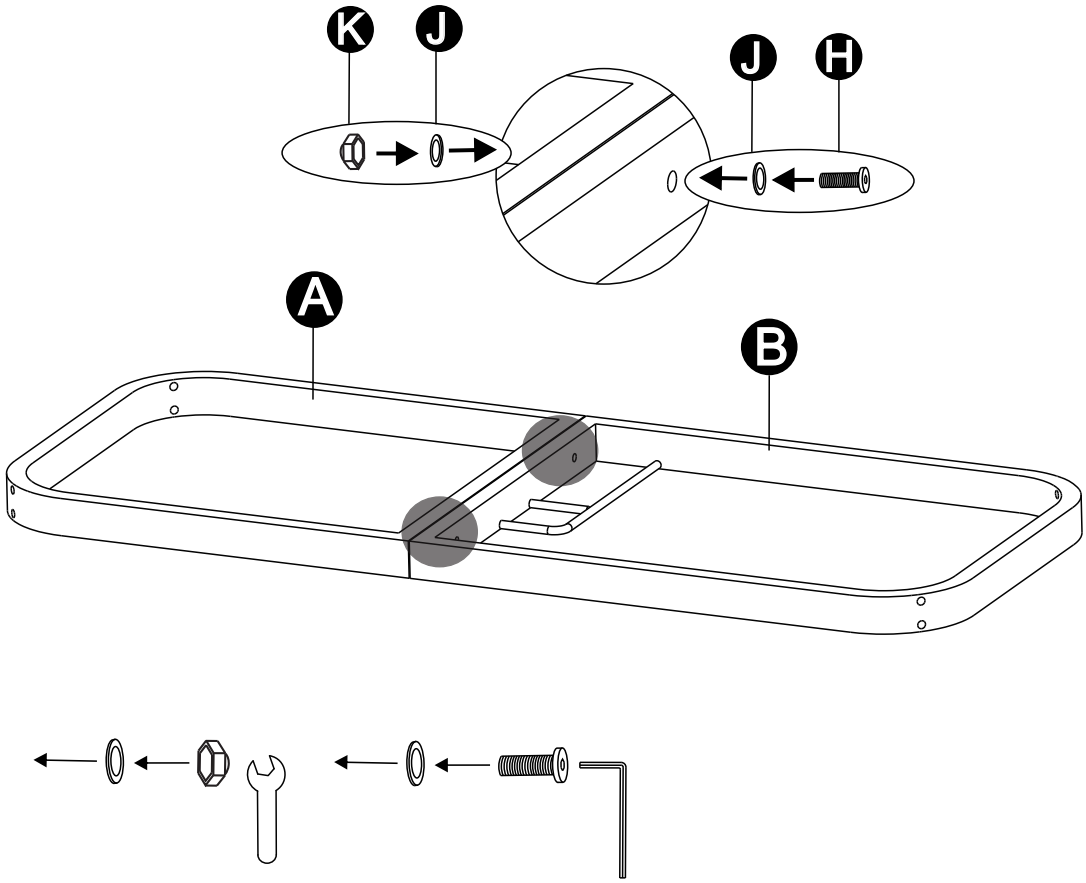

STEP 2

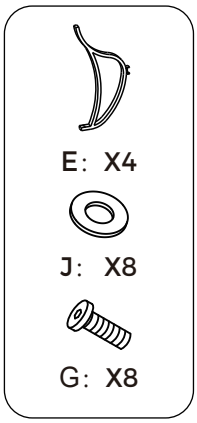

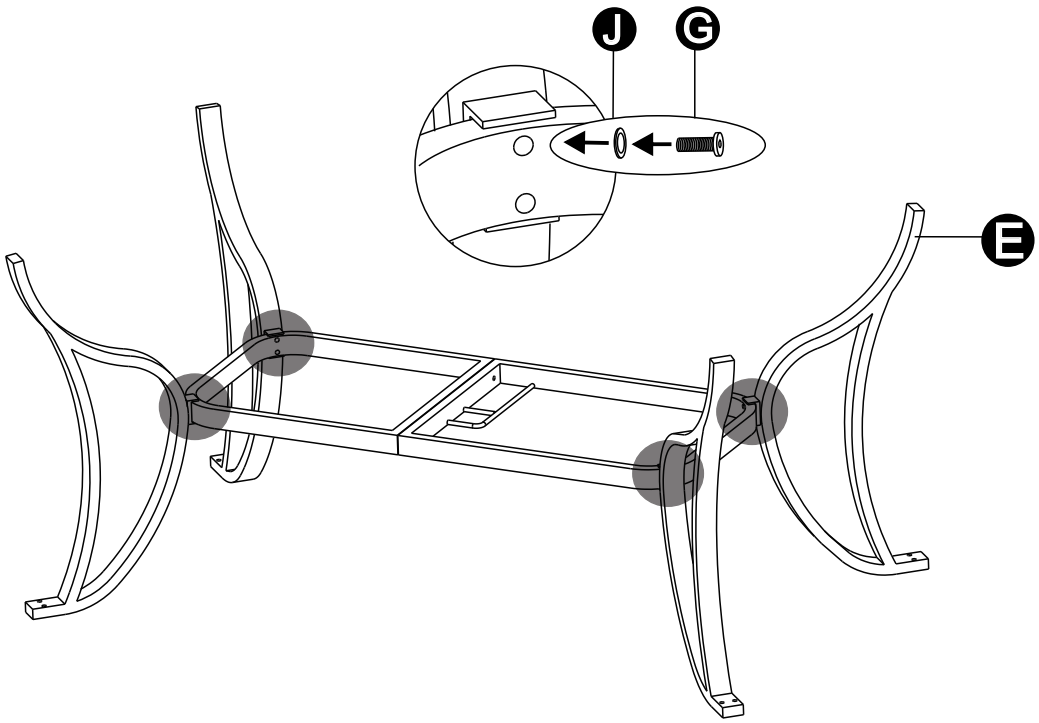

STEP 3



C: X1



D: X1

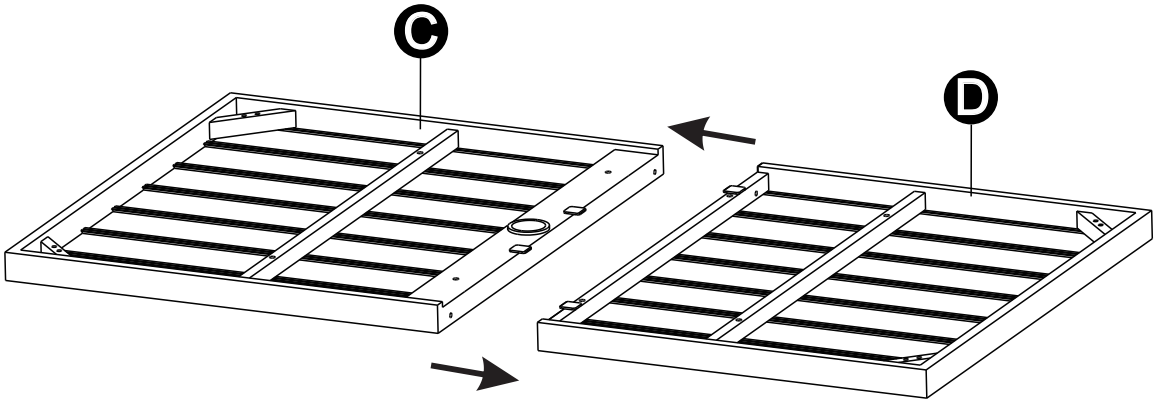

STEP 4



G: X2



J: X2

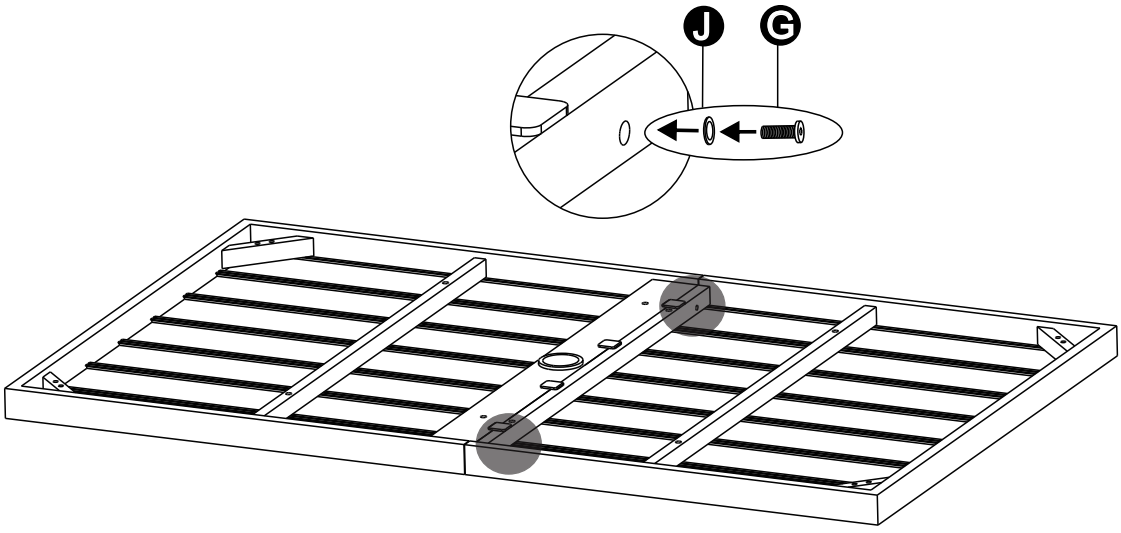

STEP 5

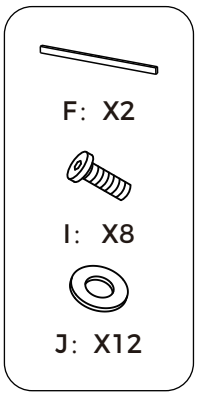

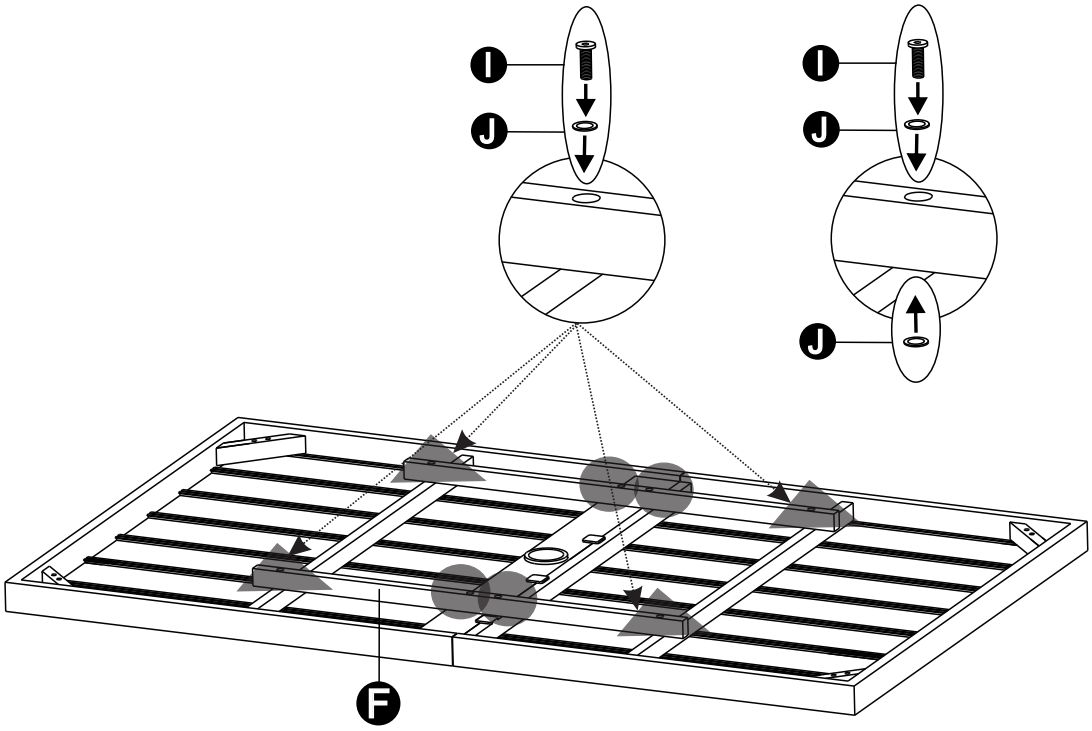

STEP 6

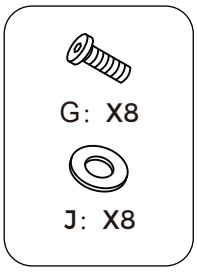

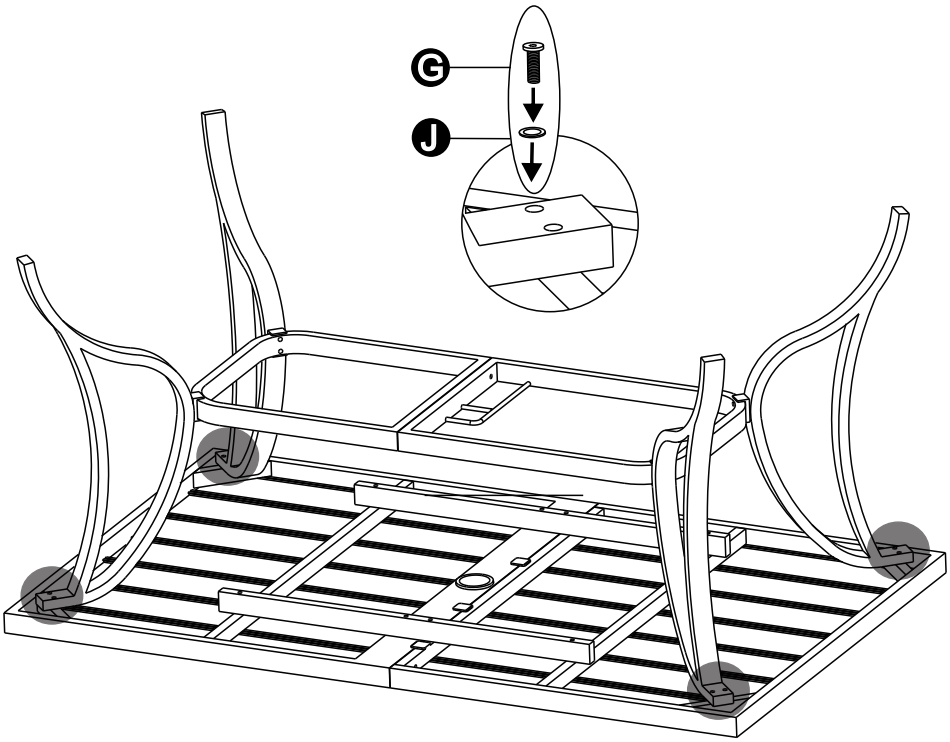

STEP 7

