Vacuum Cleaner

Instruction Manual

AS-XCQ42WS-1D8

Model: JL-C3003

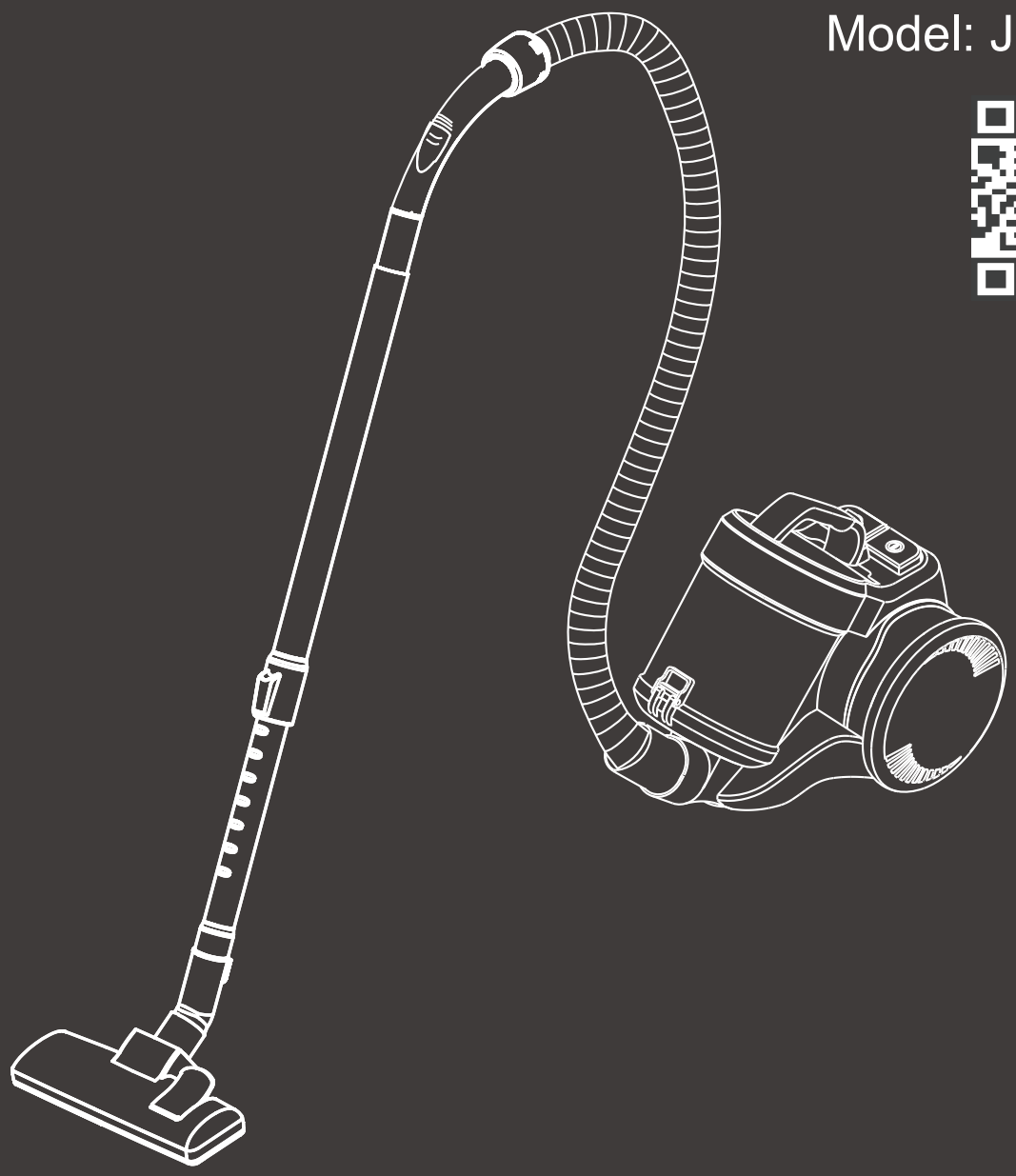

EST 9:00AM--17:00PM

HJ-Customer-Service@outlook.com

6269443420 | 6267435564

CONTENTS

Important Safety Precautions ---------- 1

Technical Specifications ---------- 3

Product Overview ---------- 3

Assembly Instructions ---------- 4

Preparation Before Use ---------- 5

Operation Instructions ---------- 5

Care and Maintenance ---------- 8

Disposal ---------- 8

Troubleshooting ---------- 9

Warranty Information ---------- 9

Important Safety Precautions

READ ALL INSTRUCTIONS

When using an electrical appliance, basic precautions should always be followed.
Warning-To reduce the risk of fire, electric shock, or injury:

1. Please read this user manual carefully before using the appliance.
2. Please keep this manual for future reference and hand it over when you transfer the product.
3. The appliance is intended for household.
4. Do not leave the appliance unattended when plugged in. Unplug from the outlet when not in use and before cleaning and servicing.
5. To reduce the risk of electric shock, do not use the appliance outdoors or on wet surfaces.
6. Use only as instructed in this manual. Use only accessories recommended by the manufacturers.
7. Do not use the appliance if the power cord or plug is damaged. If the appliance malfunctions or is dropped, damaged, left outdoors, or dropped into water, do not use it.
8. Do not pull or carry on the cord, use the cord as a handle, close the door on the cord, or pull the cord around sharp edges or corners. Do not run the appliance over the cord. Keep the cord away from heated surfaces.
9. Do not handle the plug or the appliance with wet hands.
10. Do not put any object into openings. Do not use the appliance if any opening is blocked. Keep free of dust, lint, hair, and anything that may reduce airflow.
11. Keep hair, loose clothing, fingers, and all parts of the body away from openings and moving parts.
12. Turn o ffthe appliance before unplugging.
13. Use extra care when cleaning on stairs.
14. Do not vacuum flammable or combustible liquids, such as gasoline, or use the appliance in areas where they may be present.
15. Hold the plug while rewinding the cord to prevent it from whipping.
16. Always unplug the appliance before connecting the hose.
17. Do not vacuum anything that is burning or smoking, such as cigarettes, matches, or hot ashes, to avoid the risk of fire.
18. Do not use the appliance without the dust container and filters in place.
19. This appliance is not intended for use by persons (including children) with reduced physical, sensory, or mental capabilities or who lack experience or knowledge, unless they are supervised or instructed on the proper use of the appliance by a person responsible for their safety.
20. Children should be supervised to ensure that they do not play with the appliance.
21. This appliance contains high voltage. Never open the housing.
22. Do not vacuum sharp objects, glass splinters, water, or any other liquids to avoid damage and short circuits.
23. Do not allow children to play with the plastic packaging to prevent suffocation.
24. Never expose the appliance to bad weather (rain, etc.).
25. Switch o ffthe appliance immediately if the air intakes, the floor brushes, or the telescopic tube are blocked. Remove any foreign objects before switching on the appliance.
26. Despite the filters, a small amount of dust may remain in the exhaust air, which can be inhaled and cause allergic reactions. Avoid vacuuming near children if possible.
27. Never sit on or place things on the appliance.
28. Only use the appliance when the HEPA filter, exhaust air filter, and motor protection filter have been fitted. The filters must not be damaged!

29. Before vacuuming a shampooed carpet, wait until it is completely dry. Never leave the appliance close to a heater or an oven.
30. If any components are damaged, do not continue to use the appliance.
31. Do not allow to be used as a toy. Close attention is necessary when used by or near children.
32. Do not unplug by pulling on cord. To unplug, grasp the plug, not the cord.

SAVE THESE INSTRUCTIONS

Polarization instructions

To reduce the risk of electric shock, this appliance has a polarized plug (one blade is wider than the other). This plug will fit in a polarized outlet only one way. If the plug does not fit fully in the outlet, reverse the plug. If it still does not fit, contact a qualified electrician to install the proper outlet. Do not change the plug in any way.

Warning:

1. Never use the appliance near heat sources. Do not vacuum hot objects such as cigarette ends or ashes.

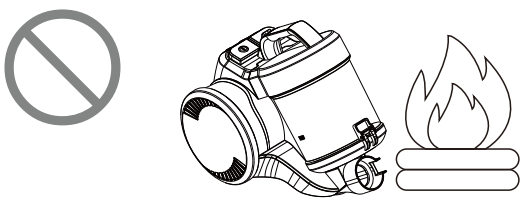

2. Do not plug in the appliance with wet hands.

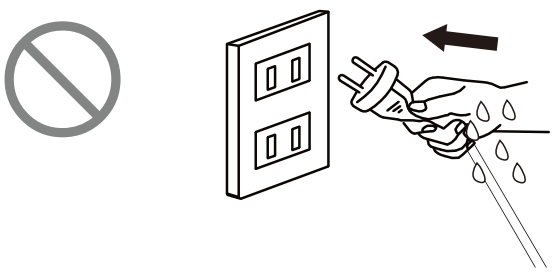

3. Remove large or sharp objects from the floor before use to avoid damage.

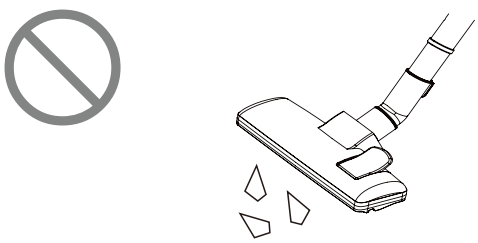

4. Never unplug by pulling on the cord. To unplug, grasp the plug, not the cord.

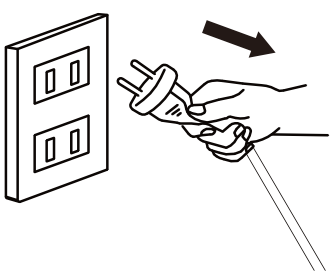

Technical Specifications

Model No.	JL-C3003
Input	120 V ~,60Hz,7.1 A
Rated Power	850 W
Capacity	1.8 L

Product Overview

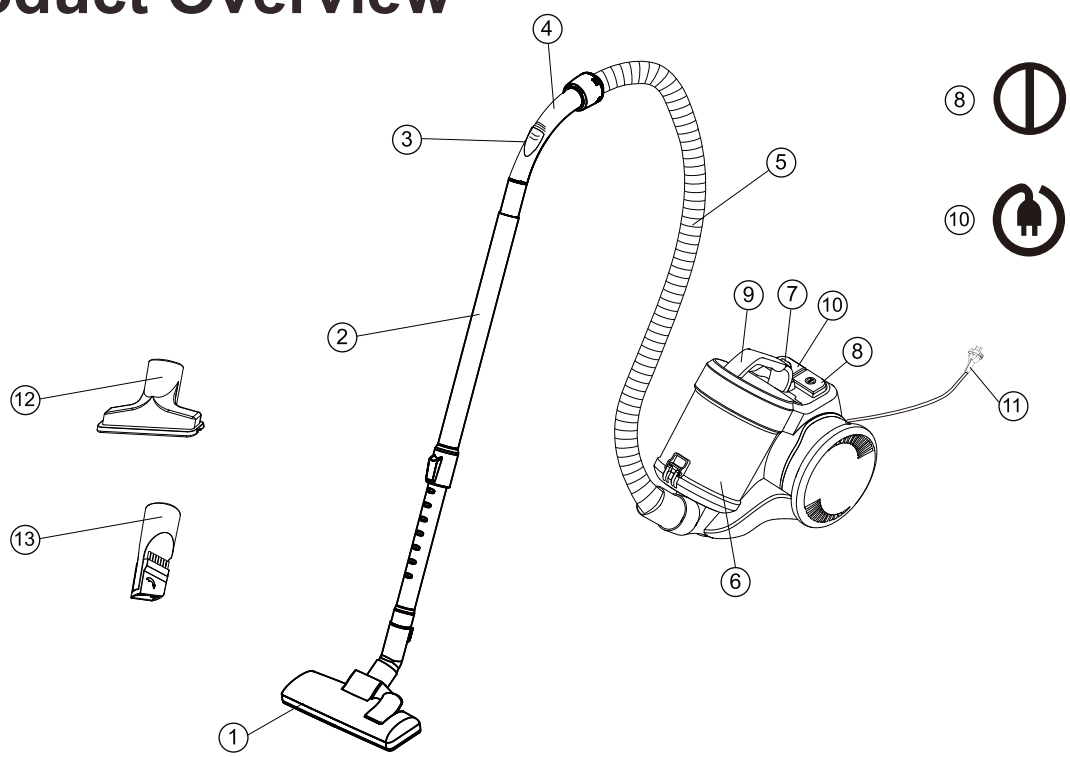

①	Floor Brush	⑧	Power Button
②	Telescopic Tube	⑨	Carrying Handle
③	Suction Adjustment Slider	⑩	Cord Rewind Button
④	Hand Grip	⑪	Power Cord
⑤	Flexible Hose	⑫	Upholstery Nozzle
⑥	Dust Container	⑬	Crevice Nozzle
⑦	Dust Container Lock Button		

Accessories	Diagram	Description
Floor Brush	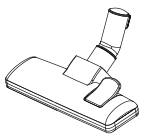	Most frequently used.
		This is suitable for cleaning wide areas.
Upholstery Nozzle	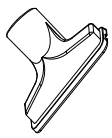	Suitable for cleaning upholstered furniture, mattresses, cushions, curtains, etc.
Crevice Nozzle	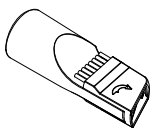	Suitable for cleaning the folds in cloth, joint cracks, corners, or niches that cannot be reached with the floor brush.

Note:

The appliance comes equipped with three accessories intended for different applications. Each accessory can either be fitted onto the telescopic tube or directly onto the suction hose.

Assembly Instructions

Warning: Always disconnect the appliance from the power outlet before attaching or removing accessories.

1. Assembling the main body

Attach the hose to the dust container assembly.

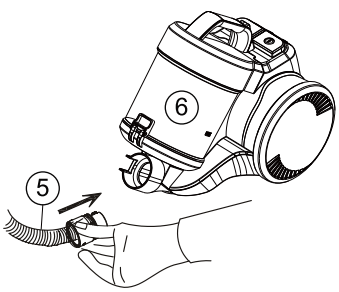

2. Assembling the telescopic tube

Insert the tube in the air intake opening. Push the tube in until it locks in place.

Note: Disconnect the appliance from the power outlet before removing the tube from the air intake.

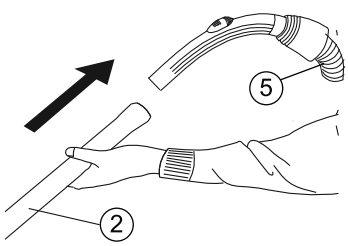

3. Assembling the accessories

Fix the floor brush to the telescopic tube.

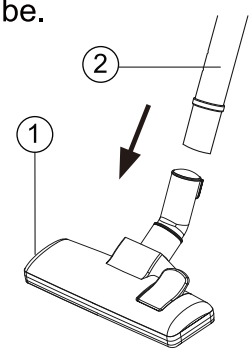

Preparation Before Use

1. Before using, first roll out a sufficient length of the power cord and plug it into the power outlet.
   Note: The red mark on the power cord is the maximum length that must not be exceeded.
2. To switch on, press the power button ⏻ on the casing.

Operation Instructions

HEPA Filter System

The appliance operates without a dust bag. Dust is collected directly into the dust container via airflow. The air is cleaned by a washable permanent HEPA filter inside the container, a motor protection filter, and an exhaust air filter.

Caution: Never vacuum without filters or with damaged filters to prevent damage to the motor.

Adjusting the Suction Power

Reduce the suction power by pushing the slider ③ forward. Increase the suction power by sliding it backward.

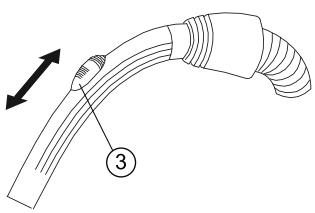

Note:

1. Push the slider forward to prevent lightweight items such as curtains from being sucked in.
2. Minimal suction power for curtains and sensitive materials.
3. Medium suction power for upholstery cushions, mattresses, and carpet floors.
4. Maximum suction power for tiled, wooden, and robust floor surfaces with heavy soiling.

After Use

1. Switch o ffthe appliance by pressing the power button ⏻ when you have finished cleaning.
2. Unplug the appliance from the power outlet.
3. To roll in the power cord, press and hold the cord rewind button . The cord will be rolled back automatically onto the installed cord reel.
4. The floor brush can be kept attached to the appliance for easy storage after use.

Emptying the Dust Container

1. Switch o ffthe appliance and disconnect the plug from the power outlet.
2. Press the lock button ⑦ on the dust container to unlock. Then, lift out the container and carry it to the dustbin.

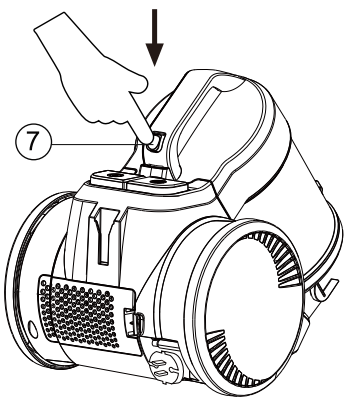

3. Hold the dust container over your dustbin and press the dust container release button.

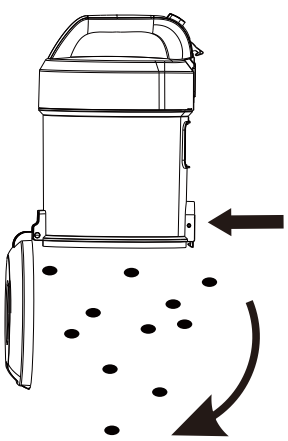

4. After emptying, clean the HEPA filter if necessary (see the Cleaning the HEPA Filter section). Then, rinse out the dust container and wipe it dry.
5. Reinstall the HEPA filter if necessary, and place the container back into position correctly.

Cleaning the HEPA Filter

Clean the HEPA filter regularly. Cleaning is best done when emptying the dust container (see the Emptying the Dust Container section).

1. Switch o ffthe appliance and disconnect the plug from the power outlet.
2. As shown, turn the dust container lid counterclockwise until it is released, and the HEPA filter will come away easily.

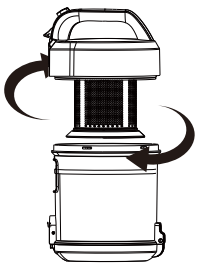

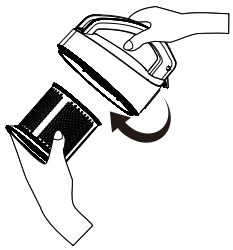

3. Reinstal the HEPA filter under running water and allow it to dry completely.

Caution: Clean the filter only with clean water. Do not use soap or detergent, as they may damage the filter.

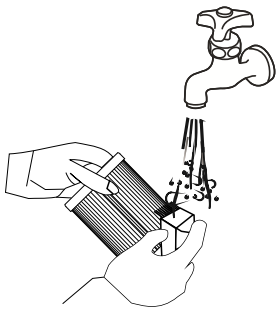

4. Reinstall the HEPA filter (or replace with a new one) and close the dust container lid. Then place the container back into position.

Note:

The appliance is equipped with a motor protection valve. When the dust container is full, the HEPA filter is blocked, or the air path is blocked, the protection valve will turn on automatically to avoid motor overheating and prolong its lifespan.

Cleaning the Exhaust Air Filter

The exhaust air filter cleans the air a final time before it is exhausted.

1. Switch o ffthe appliance and disconnect the plug from the power outlet.
2. Open the exhaust air grille at the rear of the appliance as shown.
3. Take out the filter and rinse it under cold running water. Then allow it to dry.

Caution:

Clean the filter only with clean water. Do not use soap or detergent, as they may damage it.

4. Put the exhaust air filter back into place (or replace with a new one) and reinstall the grille.

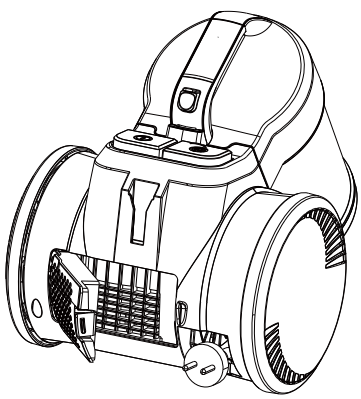

Care and Maintenance

Warning: Before cleaning, switch o ffthe appliance and disconnect the plug from the power outlet.

1. Never expose the appliance to bad weather (rain, etc.).
2. Wipe the housing, dust container with a damp cloth if required.
3. No components can be washed in a dishwasher.
4. Do not let any liquids enter the appliance.
5. Never use strong cleaning substance (scouring liquids, thinners), as these will corrode the plastic surface.
6. Hair and flu ffmay gather on the floor brush. Remove them in time for a better cleaning performance.
7. Before plugging, ensure that all components are thoroughly dry.

Disposal

1. Our packaging is made of materials that are harmless to the environment. They can be recycled and do not cause pollution. The outer packaging is made of cardboard and the wrapping and bags are made of polyethylene (PE).
2. We recommend that you keep the packaging at least until the expiry of the warranty. If the appliance need to be repaired, the original packaging will protect it from damage.
3. Please dispose of the packaging in a environmentally friendly manner.
4. When discarding the appliance, please consult your local waste disposal authorities. Used filters may be disposed of with household waste.
5. This symbol indicates that this appliance may not be disposed of as household waste. Instead, it should be taken to an appropriate collection point for the recycling of electrical and electronic equipment.

Troubleshooting

Warning:
Never attempt to repair a damaged appliance by yourself to avoid personal injury. Repairs must only be carried out by a qualified professional.

Problem	Possible Cause	Solution
Weak suction.	Suction adjustment slider is not in the maximum position.	Slide the slider backward to increase the suction power.
	An object is blocked in the suction tube.	Check the suction tube, the hose, and the nozzle in use for blockages.
	Filters are not fitted properly or are blocked.	Replace with a new filter.
The appliance does not work.	The appliance is not properly plugged in.	Check that the plug has been inserted properly.
		Check whether the power outlet is in order.
		Check the fuse box.
A whistling sound occurs during the first few hours of operation	This is not a fault.	The noise will disappear after a period of use.

Warranty Information

1. This product is covered by a **one (1)-year** limited warranty against defects in materials and workmanship, valid only for the original purchaser. The warranty period begins on the date of retail purchase and is non-transferable.
2. This warranty does not cover normal wear and tear, or any damage resulting from misuse, negligent use, use with improper voltage or current, failure to follow the operating instructions, or any disassembly, repair, or modification not authorized by our after-sales service.
3. Additionally, this warranty does not cover damages caused by Acts of God (such as fire, flood, hurricanes, or tornadoes) or force majeure events (such as arson, power outages, riots, or vandalism).
4. This warranty gives you specific legal rights, and you may also have other rights which vary from state to state (or province to province). Some states (or provinces) do not allow limitations on how long an implied warranty lasts, or the exclusion or limitation of incidental or consequential damages, so the above limitations or exclusions may not apply to you.

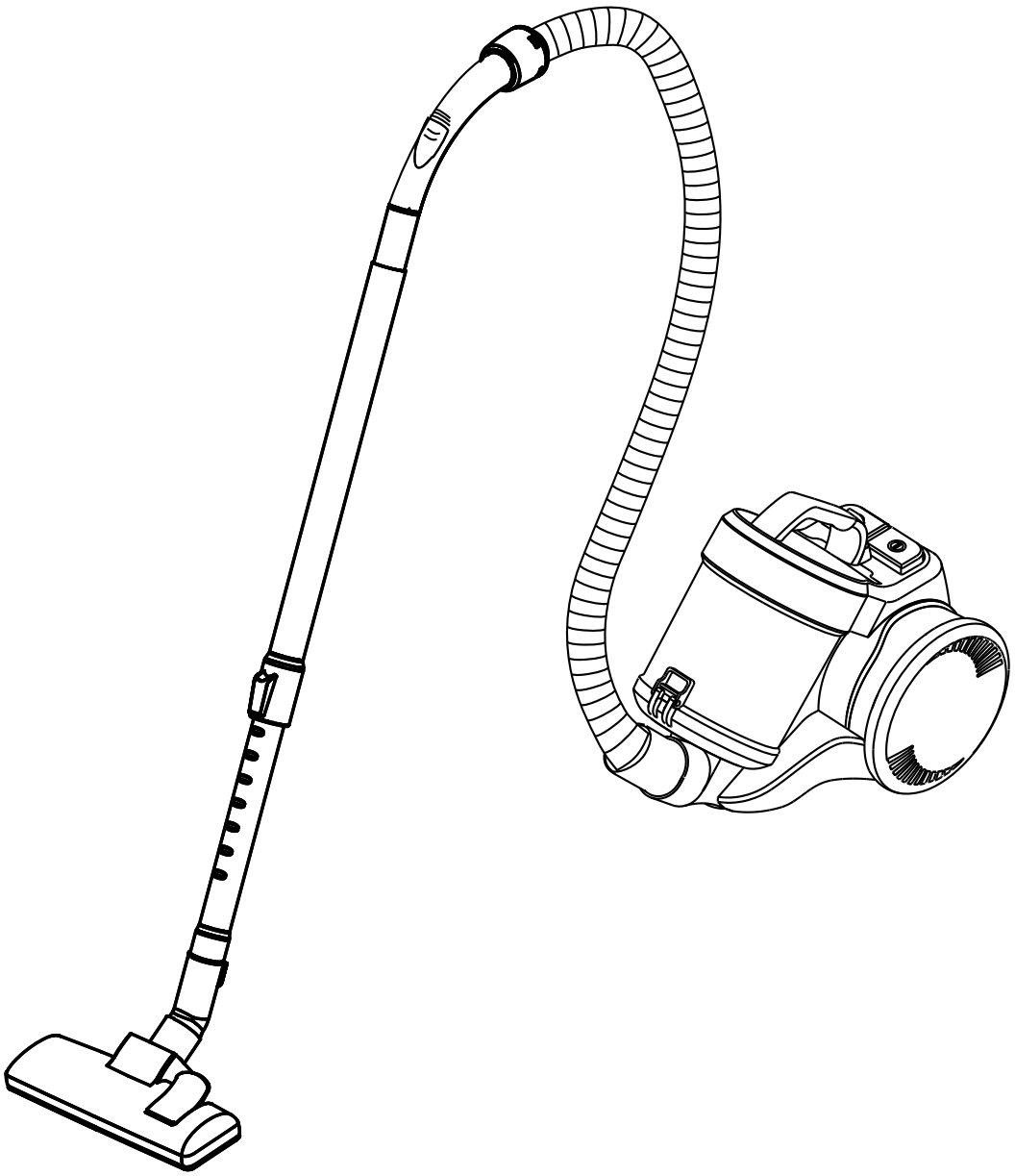

Technical Support

6269443420 | 6267435564

Other Info

HJ-Customer-Service@outlook.com

Thank you for choosing this product. We strive to provide you with the best quality products and service in the industry. Should you have any issues, please don't hesitate to contact us.